ALL THE PARTS YOU NEED

TRIUMPH

TR7 TR8

TR7 16v SPRINT

PARTS & ACCESSORIES CATALOGUE

EDITION 2.2

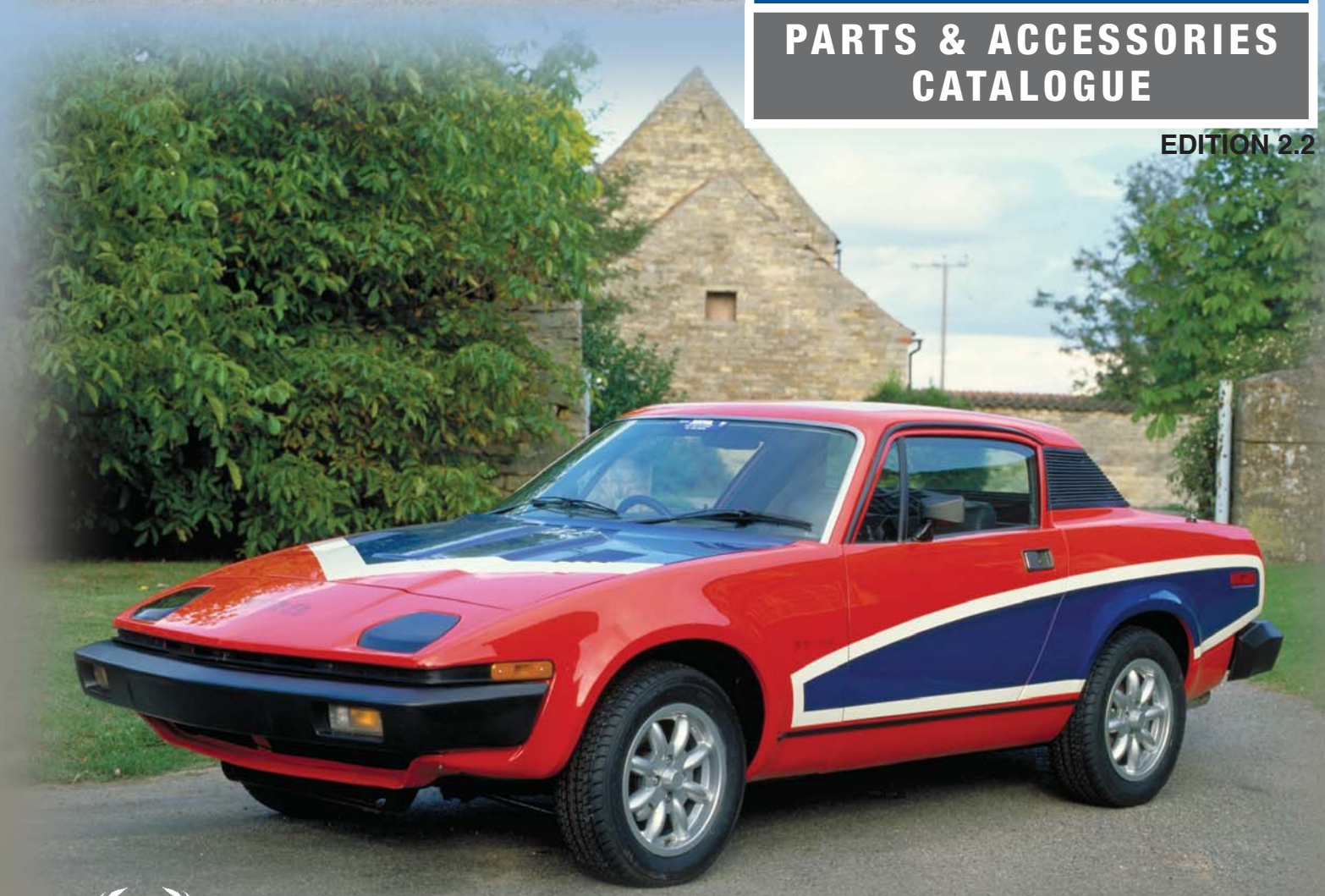

BRITISH MOTOR HERITAGE APPROVED

RIMMER BROS

Includes Conversion Kits:-

TR7 to TR8

TR7 to TR7 16v SPRINT

SOURCE CODE T7M5

RIMMER BROS TR7 TR8 & TR7 16v SPRINT PARTS CATALOGUE EDITION 2.2

THE RIMMER BROS SERVICE

WE HAVE THE PARTS

-

WE GUARANTEE THE QUALITY

-

WE'RE KEEN ON PRICE

-

WE DELIVER FAST

-

WE KNOW YOUR CAR

-

Foreword by Graham Robson

I have always been a fan of Triumph TRs, and because I drove the new TR7s before I made any instant judgements, I immediately realised what was in the designers' minds. In many ways they were always the best of the breed - and they certainly sold in the largest numbers.

When the TR7 and TR8 models were in production they had a controversial reputation, and some noisy critics always stated that they would never achieve classic status. I am absolutely delighted to note that they were wrong.

Clearly they are now more popular than ever before, and the demand for parts - some standard and some special - is stronger than ever. In the past, far too many desirable cars have gradually rotted away because the makers have lost interest in them - in the case of the TR7 and TR8 Rimmer Bros did not let this happen. You will only need to skim through these pages to realise what effort has gone into sourcing and re-manufacturing parts, to cover every aspect of these cars, so that owners can always keep them on the road, and restore them to 'as-new' condition. Now, more than ever before, updating and improving these sports cars is well worthwhile.

When the TR7s and TR8s were still on the new car market, their styling may have aroused a lot of comment, but their performance and road-holding capabilities were never in doubt. As the first of a long line of TRs to be totally engineered with an eye to exhaust emission and other safety regulations in the 1970s, they are ideally suited to motoring conditions in todays environment.

This is a vast catalogue which reflects the huge stocks held by Rimmer Bros, and it reflects their dedication to the marque. However, I know this could not have been achieved without a great deal of help and encouragement from British Motor Heritage, and without the co-operation of the one-make Clubs catering for these machines. Everything you need to improve your TR7 or TR8 is probably in stock at Rimmers, right now. All you have to do is ask...

Graham Robson

HELPING YOU CARE FOR YOUR TRIUMPH

Although the TR7 initially met with rather a mixed reception (some loved it, but others didn't), the number of cars which still grace our roads is a testament to the long-term appeal of the design.

Many thousands of enthusiasts still take pleasure in restoring and maintaining their TR7, TR7 16v Sprints and TR8's. To help in this process, the one absolute essential is to have access to a reliable source of parts. As the years go by, parts become more and more difficult to find. Happily, however, this is where we at Rimmer Bros come into our own.

Supplying parts for classic Triumph cars is the job for which our company has been created... and we think it's a job we do better than anyone else.

MEMBERS OF BRITISH MOTOR HERITAGE

TRIUMPH TR2-8, SPITFIRE, GT6, STAG, 2000/2500, HERALD/VITESSE, DOLOMITE/SPRINT. ROVER SD1 British Motor Heritage Approved

British Motor Heritage is an organisation committed to the preservation of the cars which have special places in our motoring history. One of the ways in which it pursues this objective is by helping to ensure that replacement parts are available and are of sufficient quality. Stringent standards are necessary to meet the requirements of Heritage approval, and the highest accolade for any company involved with the supply of parts for classic cars is to have Heritage approval. Rimmer Bros were invited to Heritage membership in 1987 and are approved for Triumph and Rover SD1 models.

THE CARS WE SPECIALISE IN

As well as supplying parts for your TR7 & TR8, we also concentrate on TR2/3/4/4A, TR5/250, TR6, 2000/2500/2.5Pi, Stag, Spitfire, GT6, Dolomite, Herald, Vitesse, Rover SD1, Range Rover, Discovery, Freelander, Defender, 90/110 and Land Rover 'Series' vehicles. Additionally, we also supply parts for MG Rover cars - Rover 100/200/400/600/800/25/45/75/ZT & MGF. Please refer to inside rear cover for details on all our catalogues.

RIMMER BROS

UK · WORLDWIDE · THE

SO WHERE DO WE GET OUR PARTS

Wherever possible we supply original stock from BL/Rover sources - lots of parts are still manufactured. Where this fails, we sometimes have parts re-manufactured. We have Heritage approval to do this, because we have satisfied them as to our quality control standards, and we use original tooling and factory drawings where these are available. Where original parts are unavailable and the cost of re-manufacture is prohibitive, we may supply a suitable alternative or in certain cases offer a used (non safety critical) part.

THE STOCK WE NEED TO GIVE THE SERVICE YOU NEED

Our degree of specialisation means two things.

Firstly, our people know the cars we're dealing with inside and out, and can give you any advice you might need regarding part selection.

Secondly, we are able to stock in depth just about any part you might need. Triumph House is our latest HQ, acquired in 1991. With nearly 50,000 square feet of warehousing alone, it is a cavernous building, and it needs to be! It currently contains more than 350,000 recorded part numbers with over 25,000 stock lines, and we hold as many of each as necessary to make it almost impossible to run out of stock.

All other aspects of our operation receive equal emphasis. A truly efficient mail order and stock control system. The latest racking and storage facilities for fast and accurate "order picking". Careful packaging and despatch procedures.

THE PEOPLE YOU'RE DEALING WITH

This company really is owned by two brothers named Rimmer. Bill and Graham started their business from humble beginnings in the early 1980s, and it has grown to be one of the leading organisations of its kind in the world, supplying parts Worldwide to an ever growing list of customers.

Both Bill and Graham still work full-time in the business, helped now by over 50 members of staff.

The main qualification of membership of our staff is a recognition that our customers, and our company reputation, depend on our ability to get every aspect of our service right first time.

RIMMER BROS

COMMITMENT TO CUSTOMER SERVICE

Helpful - Accurate - Fast - Efficient

The overall objective at Rimmer Bros is to achieve customer satisfaction at all times.

Our people know your car well, and every member of our staff is dedicated in helping to preserve Classic Cars.

Our computer system gives up-to-the minute information regarding availability and the price of any item.

We have an enviable reputation for despatching goods when the customer needs it, quickly and efficiently.

We try to make all our systems and documentation easy to follow and use, and make sure that our catalogues and price guides really do help our customers choose the right parts easily, first time.

TRIUMPH

TRADE MARKS & LOGOS: The 'Triumph' and 'Heritage' logos used herein are registered Trade Marks of British Motor Heritage Ltd, and are used with their license under the special 'Heritage' approval scheme.

ILLUSTRATIONS: The factory line drawings of parts are also reproduced under license from British Motor Heritage Ltd.

© Copyright Rimmer Bros. All rights reserved. No part of this publication may be copied, reproduced, stored in any retrieval system, communicated or transmitted in any form or by any means, including Photocopying, Electronic, Mechanical or otherwise, without prior written permission from Rimmer Bros Ltd.

TRIUMPH PARTS SPECIALIST

HOW TO

TELEPHONE NUMBER

SALES

01522 568000

(Overseas +44 1522 568000)

FAX NUMBER

SALES

01522 567600

(Overseas +44 1522 567600)

ADDRESS DETAILS

Rimmer Bros, Triumph House, Sleaford Road, Bracebridge Heath, Lincoln, LN4 2NA, England.

ORDERING BY E-MAIL AND THE INTERNET

For Internet surfers our web site holds details on all our parts catalogues and has an on line ordering facility. Use our E-Mail address for sending your order or parts enquiry. State if you require us to confirm prices, as they can sometimes alter at short notice.

E-Mail:
sales@rimmerbros.co.uk

Order through our website using our **secure** on-line ordering system!

All the latest news, special offers, products and prices just a 'click' away.

www.rimmerbros.co.uk

THIS CATALOGUE & OUR PRICE GUIDE

There are no prices in this catalogue. Use it to select the parts you need, then check their cost by referring to the separate Price Guide (or CD rom) which represents the other half of our ordering system. The price guide is updated and reprinted more frequently, but we ask that you confirm all prices when ordering. It may also list additional parts (new lines) that we have introduced since this catalogue was printed, and it has more detailed information about ordering & delivery methods. It also has information on warranties and a 'Trouble Shooter Guide'.

ORDERING BY PHONE

Please quote your home postcode and part numbers where possible. This gives instant access to our computerised records and stock control system. If you have any difficulty in selecting the parts you need, our expert staff can help.

UK Payment for Phone Orders
(See also "Overseas Orders & Payment.")

When you have checked on price, availability and delivery costs you can place your order by phone using Visa, MasterCard, Delta/Connect, Maestro, Solo, American Express, Diners Club, or JCB. You will merely need to tell us the card number, expiry date (or issue number), cardholder's full name and registered card address.

After Hours Ordering Service

We operate a 24-hour answering/ordering service which is available to card holders out of normal hours for both UK and Overseas customers. Just leave all necessary details on our telephone voice mails, ie your vehicle type, year, model, the parts and/or the part numbers you require, plus your name, address (inc, postcode), credit card details and delivery address (if different).

Writing out these details before phoning usually helps a caller to give us clear instructions. If at all possible, please also leave a daytime telephone number.

ORDERING BY POST

Triumph House, Sleaford Road, Bracebridge Heath, Lincoln, LN4 2NA, England.

We ask you to phone first if at all possible - to check your parts selection, and to advise of delivery charges. Because prices and availability sometimes change, we can also confirm the exact remittance needed avoiding unnecessary delays. If you have not been able to telephone, please give us all possible information - car type/year, RH or LH, front/rear etc - so we can check your selection (including your name, address and postcode) in all correspondence.

Use our Order Form if you can. It asks specifically for all the details we might need. Please photostat or request additional copies of the order form if required.

UK Payment for Post Orders *(See also "Overseas Orders & Payment.")*

Send your remittance with the order. The 'Pricing' section in the Price Guide tells you how to calculate the amount.

We accept payment by personal cheque even if the cheque guarantee card limit is exceeded. All we require is your full name and address on the back of the cheque along with your cheque card number and for business cheques, a relevant letterhead. Cheques or P.O.s made out "Rimmer Bros Ltd" please.

Note, if you are unsure as to the exact amount to send, you can write across the top of your cheque, "Cheque Value Not To Exceed £...". You can post us your credit card details if you prefer. If you send cash, note that we cannot accept responsibility for any loss, so registered mail is essential. Bank drafts and Building Society cheques are also accepted. For Bank Transfer information see Price Guide.

ORDERING BY FAX

UK CUSTOMERS: 01522 567600 OVERSEAS CUSTOMERS: +44 1522 567600

See also "Overseas Orders & Payment."

Another facility for customers who wish to make enquiries, or order by credit, debit or charge card. Again, we will need your name, address (inc. postcode), credit card details and delivery address (if different). Plus fullest possible car/parts details - as for orders by post.

ORDER

COLLECTING IN PERSON

If you wish to 'call and collect', you will always be made welcome at our shop and sales counter during business hours. Our Visitor Information Centre has lots of interesting details of each production model and the factories where they were produced.

Customers drive here regularly from all over Europe. Lincoln is a historic Cathedral city and is an excellent place to visit. We're about 2 miles south of Lincoln on the A15 Lincoln to Sleaford road (see map on back cover). We advise you to pre-check by phone that we have the part/s you want in stock.

We accept payment by credit card, cash, bank draft, travellers cheque, building society cheque, and personal cheque (when presented with a cheque card) even if the cheque card limit is exceeded, and by business cheque with accompanying letterhead.

PRICING

For full information and details on prices, VAT, & VAT exempt export sales, please refer to the latest Price Guide. Written quotations are available on request, for parts and/or delivery charges. Please confirm all prices when ordering - prices and availability can sometimes change at short notice. Up to date prices can be found on our web site.

OVERSEAS ORDERS & PAYMENT

We supply parts to classic car owners Worldwide. We have thousands of customers in Europe and regularly send parts as far afield as Australia, North America, Africa and the Far East. Delivery costs of course, vary greatly (depending on size/weight/urgency). We can quote accurately for the cost of parts and delivery once your requirements are known.

Our Multi-language European Order Forms explain how to order parts in English, Italian, German, Spanish and French.

WE EXPORT TO THE EC & WORLDWIDE

TEL: +44 1522 568000
FAX: +44 1522 567600
E-MAIL: sales@rimmerbros.co.uk

Payment By Export Customers:

There is a choice of payment methods for customers overseas;

A) Credit card, Debit card or Charge card.

B) Bank cheque - in ££s sterling (Drawn on a London Bank)

C) Travellers Cheques (signed) - in ££s sterling.

D) Giro Cheques in ££s sterling.

E) By Bank Transfer - see Price Guide.

PLEASE NOTE THAT ALL TRANSACTIONS MUST BE IN ££s STERLING.

CHOICE OF DELIVERY METHODS

(For Further Information/Cost Details, Please Refer to Price Guide)

UNITED KINGDOM

There are numerous delivery options for the UK mainland ranging from Post (first class or parcel post) to overnight carrier services. We can advise of the best method of despatch when you telephone. The type of service that we recommend depends upon the size, weight and urgency of the parts you require.

Our price guide indicates the approximate costs, and we will confirm the final invoice total at the end of the call if required.

WORLDWIDE (NON EC COUNTRIES)

We started exporting parts Worldwide in 1982, and since then we have gained an excellent reputation for our speed & efficiency of service.

Delivery costs are based on size, weight, and method of delivery. We have discounted rates with well known carriers, so costs are kept to a minimum. Send us a list of the parts you need (using post, phone, fax or E-Mail), tell us quantities and urgency, and we will work out the best delivery method and quickly advise you of the cost.

Written quotations are available on request.

EC COUNTRIES

The European Community Single Market permits the free movement of goods between all EC countries. This allows us to provide a superb service to all our customers within the EC, with the benefits of improved delivery - via lower charges and easier documentation. Deliveries can be easily arranged using air or surface transport. Our Price Guide indicates approximate costs.

CATALOGUE CONTENTS

VEHICLE PRODUCTION SUMMARY Page 5
LOCATION OF SERIAL/VIN NUMBERS Page 6
INDEX Page 206

TR7 sections start on;
QUICKFINDER *(Popular Parts)* Page 7
SERVICE INFORMATION Page 8
ENGINE Page 9
CLUTCH Page 17
ENGINE & GEARBOX MOUNTINGS Page 18
COOLING & HEATING Page 19
FUEL SYSTEM Page 24
EXHAUST SYSTEM Page 31
4 SPEED GEARBOX Page 33
5 SPEED GEARBOX Page 37
AUTOMATIC GEARBOX Page 42
PROPSHAFTS (All Models) Page 45
REAR AXLE *(4sp & Early Auto)* Page 46
REAR AXLE *(5sp & Late Auto)* Page 48
SUSPENSION - FRONT Page 50
SUSPENSION - REAR Page 52
SUSPENSION PACKAGES/KITS Page 53
ROAD WHEELS Page 55
BRAKE SYSTEM Page 58
STEERING Page 64
ELECTRICAL SYSTEM Page 66
BODY REPAIR PANELS Page 81
BODY PARTS & FITTINGS Page 83
EXTERIOR TRIM Page 96
INTERIOR TRIM Page 101
HOOD & FRAME Page 119
SUNROOFS Page 123
TR8/TR7 V8 starts on: Page 124
TR7 16v Sprint starts on: Page 176
ACCESSORIES Page 183

NEW & RECONDITIONED PARTS

Almost every part we list is sold brand-new, but in many instances we also offer you the facility to buy "Reconditioned" (usually giving us your old component in part-exchange).

Where there is a reconditioned version of a part, you will find the letter 'R' added at the end of the part number.

EXCHANGE SURCHARGES (REFUNDABLE)

Where parts are sold on an exchange basis, an "Exchange Surcharge" is applied – a deposit in effect, which is refunded to you when your old unit is received by us. This system allows you to make an exchange without having to send the old unit first ... it can often prevent your vehicle being off the road. The amount of the Exchange Surcharge is shown in the Price Guide in italics below the part number.

Before returning your old unit, please telephone our customer service dept on 01522 568000 in order to obtain a return authorisation number. See reverse of invoice for full details of return procedure. Units must be drained of oil, water and be serviceable; we reserve the right to retain all or part of the surcharge if the unit is irreparable, damaged, incomplete or not identical to the type supplied.

SELECTED USED PARTS

We are often asked for parts that are no longer available, where the cost of re-tooling or re-manufacturing is prohibitive, and there is little or no chance of the part becoming available. We have also found that some customers prefer the option of being able to buy a (non safety critical) used alternative, where perhaps the cost of a new part is unjustified.

Over the years, we have acquired many parts which are suitable for re-sale. You will find these parts listed in the Price Guide under the same part number reference as new but with a 'U' suffix. All used parts have been cleaned and inspected and are sold as serviceable when fitted.

"Errors & Omissions Excepted. All parts offered subject to availability. All part numbers, illustrations and photographs used in this catalogue are intended for reference/identification purposes only, and are not necessarily an exact representation of the goods supplied. Whilst we make every effort to ensure the accuracy of product descriptions in this catalogue, they are based upon information supplied by the manufacturer/distributor at the time of publication. There may be occasions - due to circumstances beyond our control - when specifications are changed, or when goods become temporarily unavailable."
Certain part numbers have been superseded to an alternative number when a later version or updated specification is offered.

VEHICLE PRODUCTION SUMMARY
TR7 - TR7 16v Sprint - TR8

The Following information has been compiled and supplied by Anders Clausager of the Heritage Motor Centre (Gaydon), and is reproduced by kind permission of the British Motor Industry Heritage Trust Ltd. Our thanks to them.

1) SPEKE BUILT CARS, 1975 TO 1978:

1a; 1975 and 1976 model years, North American coupes:
- ACL/1 (January 1975) to ACL/7248 (Sept' 1975), 1975 model year.
- ACL/10001 (Sept' 1975) to ACL/34099 (Oct'1976), 1976 model year.

1b; 1976-78 coupes for home market, Europe and rest of World:
- ACG/1 (June 1975) to ACG/4688 (Oct' 1976)
  NB: approx' only 50 cars built in 1975
- ACG/10001 (Oct' 1976) to ACG/23406 (June 1977).
- ACG/25001 (June 1977) to ACG/27053 (August 1977).
  Note: some sources also quote a series starting from 30001, but this did not exist
- ACG/35001 (August 1977) to ACG/37661 (May 1978).

1c; 1977 and 1978 model year, North American coupes:
- ACW/1 (Sept' 1976) to ACW/17115, 1977 model year.
- ACW/30001 (June 1977) to ACW/33051, 1978 model year.
- ACW/40001 (Aug' 1977) to ACW/44328, 1978 model year.
  (44328: May 1978)

1d; TR7 Sprint coupe with 16 valve engine:
- ACH/1 to ACH/700, (February to October 1977).
  NB; not all numbers issued

1e; TR7-V8 coupe for North America, 1977 and 1978 model year:
- ACN/1 to ACN/1116, (February to October 1977).
  NB; not all numbers issued

1f; TR7 convertible for North America:
- ACT/1 to ACT110, (April-May 1978). *(NB; not all numbers issued)*

2) CANLEY BUILT CARS, 1978 TO 1979:

2a; TR7 coupe for home market, Europe and rest of World:
- TCG/100001 to TCG/115893, October 1978 to October 1979.
  NB; TCG and TCW models shared one series of commission numbers

2b; TR7 coupe for North America:
- TCW/100001 to TCW/115604, October 1978 to October 1979.
  NB; TCW and TCG models shared one series of commission numbers

2c; TR7 convertibles for North America:
- TCT/100001 to TCT/105825, (January to June 1979), 1979 model year.
- TCT/110001 to TCT/115897, (June to October 1979), 1980 model year.
  NB; 1979 models had their own commission number series, 1980 models shared the same series of numbers with TCG and TCW type coupes

2d; TR8 coupes for North America:
- TCN/150001 to approx' TCN/150198, 1978 model year.
- TCN/160001 to approx' TCN/160142, 1979 model year.
  Some cars were re-numbered from 150000 series to 160000 series. it is doubtful that all numbers in the series quoted were in fact issued

2e; TR8 convertibles for North America.
- TCV/200001 onwards, 1979 model year. *(Exact number built unknown)*

3) CANLEY BUILT CARS WITH VIN PREFIX NUMBERS, 1979 - 1980:

3a; - Prefixes have eight characters starting with TP, and ending with AT.

3b; - Series of Numbers:
VIN 200001 to 215080 (October 1979 to August 1980).
VIN 402001 to 402026* (May 1980 to June 1980).
**This represents one batch of "1981" models built at Canley, compare to 'Solihull built cars' below*

3c; - All TR7 and TR8 models share the same series of numbers.

4) SOLIHULL BUILT CARS WITH VIN PREFIX NUMBERS, 1980 - 1981:

4a; - Prefixes have eight characters starting with TP, and ending with AA.

4b; - From May 1981, "1981" models have an additional three letters in front of the eight-character prefix, ie; SAT.

4c; - North American export models in 1981 have different style prefixes to meet US legislative requirements.

4d; - Series of Numbers:
VIN 400001 to 401918 (April 1980 to September 1980), "1980" models.
These were mostly "Limited Edition" models for North American markets
VIN 402027 to 405636 (September 1980 to May 1981), "1981" models.
VIN 406001 to 408534 (May 1981 to October 1981), "1981" models.

4e; - All TR7 and TR8 models share the same series of numbers.

TOTAL PRODUCTION TR7 & TR8

TR7	**112368 vehicles**
TR8 (Lhd)	**2722 vehicles**

LOCATION OF SERIAL & VIN NUMBERS

The following illustrations show where the various identification/serial numbers are located on the TR7.

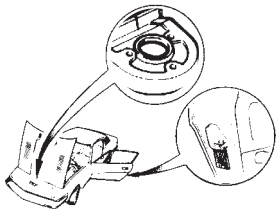

1] VIN/COMMISSION NUMBER
(Vehicle Identification Plate).

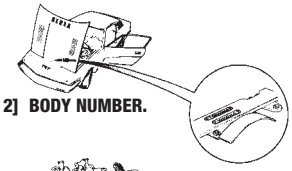

2] BODY NUMBER.

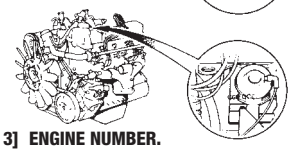

3] ENGINE NUMBER.

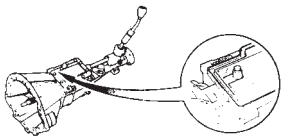

4] 4 SPEED GEARBOX.

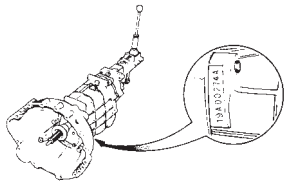

5] 5 SPEED GEARBOX.

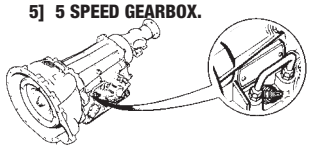

6] AUTOMATIC GEARBOX.
(Note; Serial numbers on Automatic gearboxes are supplied by Borg Warner)

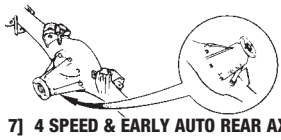

7] 4 SPEED & EARLY AUTO REAR AXLE.

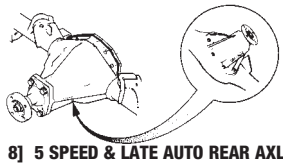

8] 5 SPEED & LATE AUTO REAR AXLE.

YOUR VEHICLE DETAILS

Enter your vehicle details here for easy reference

Vehicle Model/Type* : _____

Year of Manufacture* : _____

VIN/Commission No* : _____

Body Number : _____

Body Colour/Code* : _____

Interior Trim Code* : _____

Engine type : _____

Engine Number : _____

Gearbox type : _____

Gearbox Number : _____

Rear Axle type : _____

Rear Axle Number : _____

**Located on VIN Plate.*

IMPORTANT NOTE ***Vehicle Chassis/Identification Numbers & Component Serial Numbers***

Wherever Identification numbers are quoted in this Catalogue (to help you to distinguish Factory changes/years), they relate to the Original Factory Specification or Component when the vehicle was new, and not to subsequent miscellaneous replacements.

www.rimmerbros.co.uk

*Order through our website using our **secure** on-line ordering system!*

All the latest news, special offers, products and prices just a 'click' away.

UNDER CONSTANT REVIEW - LOOK OUT FOR NEW FEATURES AND CATALOGUES

E-mail: sales@rimmerbros.co.uk

Description | Qty Req. | Part No.

TR7 POPULAR PARTS

This section will help you find the parts which are most frequently called for; filters, seals, bushes, cables etc.

If you are unsure, you will find each part listed again under its appropriate section.

Engine Service Kits

Kits are for vehicles fitted with standard ignition etc, & inc; plugs, points, air/oil filters, condenser & fan belt. Deluxe kits also include distributor cap and rotor arm (suffix 'D' on part number).

Service Kit with Standard type		
Oil Filter Element	(1)	**RB7044**
Service Kit with Spin-on type		
Oil Filter Cartridge	(1)	**RB7032**

Service Items

Oil Filter Element		
Standard	(1)	**GFE147**
Cartridge type	(1)	**RR1243**
Air Filter		
Standard	(1)	**GFE1040**
K&N *Replacement for standard filter.*	(1)	**GFE1040KN**
Thermostat		
Winter (88°)	(1)	**GTS108**
Summer (82°)	(1)	**GTS101**
Temperature Transmitter	(1)	**GTR108**
Fan Belt		
Standard application	(1)	**GCB10900**
Kenlowe application *No idler pulley.*	(1)	**GCB10788**
Distributor Cap	(1)	**GDC110**
Rotor Arm	(1)	**GRA111**
Condenser	(1)	**GSC104**
Contact Breaker Points	(1)	**GCS106**
Spark Plugs;		
Standard Specification	(4)	**GSP4382**
High Performance	(4)	**GSP4382HP**
Plug Lead Set ***(Standard);***		
To VIN 200000 *(41 cm coil lead)* *Coil mounted on bulkhead.*	(1)	**GHT167**
From VIN 200001 *(71 cm coil lead)* *Coil mounted on Rh inner wing.*	(1)	**GHT183**
Plug Lead Set ***(High performance);*** *Silicone leads.*		
To VIN 200000 *(41 cm coil lead)* *Coil mounted on bulkhead.*	(1)	**GHT167HP**
From VIN 200001 *(71 cm coil lead)* *Coil mounted on Rh inner wing.*	(1)	**GHT183HP**
Clip-Plug Lead *(Holds 4 cables)*	(1)	**148673**
Clip-Plug Lead *(Holds 2 cables)*	(2)	**148672**
Ignition Coil		
Standard	(1)	**GCL132**
High Performance	(1)	**GCL132HP**

Lubricants & Fluids

See 'Accessories' for full range.

Engine Oils;		
Unipart (20w/50) *4.55 Litre/1 Gallon.*	(a/r)	**GGL104**
Duckhams Q (20/50) *4.55 Litre/1 Gallon.*	(a/r)	**HMP190100**
Castrol (Classic XL 20/50) *4.55 Litre/1 Gallon.*	(a/r)	**RX1363**
Castrol Running in Oil *4.55 Litre/1 Gallon.*	(a/r)	**RX1417**
Duckhams Q Storage Oil *4.55 Litre/1 Gallon.*	(a/r)	**HMP190104**
Gearbox Oil *(4 speed);*		
EP90 Gear Oil *(0.5 Litre)*	(a/r)	**GGL190**
Gearbox Oils *(5sp & Auto);*		
Gear Oil (ATF) *(0.5 Litre)*	(a/r)	**GGL175**
Gear Oil (ATF) *(5 Litre)*	(a/r)	**GGL505**
Rear Axle Oil;		
EP90 Gear Oil *(0.5 Litre)*	(a/r)	**GGL190**
Multi Purpose Grease *(400g Tube)*	(a/r)	**GGL111**
Anti-freeze (Unipart) *(1 Litre)*	(a/r)	**GAC2018**
Anti-freeze (Unipart) *(5 Litre)*	(a/r)	**GAC2019**
Brake/Clutch Fluids;		
Standard (Dot 3) *(1 Litre)*	(a/r)	**GBF103**
Silicone* *(0.5 Litre)*	(a/r)	**RX1327**
Silicone* *(1 Litre)* **DO NOT use mix with standard fluid.*	(a/r)	**RX1326**
Copaslip Slip *(80g tube)*	(a/r)	**RX1345**
Fuel Additive *(For Leaded Engines)*	(a/r)	**RX1407**

Engine Gaskets

Head Gasket Set;		
With Standard Head Gasket	(1)	**GEG1220**
With Extra Thick Head Gasket	(1)	**GEG1220XT**
Head Gasket only;		
Standard Gasket	(1)	**GEG3304**
Extra Thick Gasket	(1)	**GEG3304XT**
Sump Gasket Set		
With oil seals	(1)	**GEG278**
No oil seals	(1)	**GEG278K**
Sump Gasket only	(1)	**GEG555**
Cam Cover Gasket	(1)	**GEG447**
'U' shaped End Plug *(Cam Cover)*	(2)	**144488**
Inlet Manifold Gasket	(1)	**AJM679**
Exhaust Downpipe Gasket	(1)	**GEG732**
Exhaust Manifold Gasket Set *Manifold to cylinder head-If required.*	(1)	**RB7006**
Thermostat Gasket	(1)	**GTG103**

Oil Seals

Crankshaft Oil Seals;		
Front *(Timing cover)*	(1)	**UKC3344**
Rear *(Main)*	(1)	**143148**
Gearbox Oil Seals;		
4 Speed		
Front seal	(1)	**132292**
Rear seal	(1)	**88G564**
Oil Seal *(Speedo drive pinion)*	(1)	**NKC105A**
5 Speed		
Front seal *(To) G/box No CL22476C)*	(1)	**UKC12**
Front seal *(From G/box No CL22477C)*	(1)	**UKC1060**
Rear seal	(1)	**UKC3949**
Oil seal *(Speedo drive pinion)*	(1)	**NKC105A**
Automatic		
Front seal	(1)	**BAU1034A**
Rear seal	(1)	**37H6987**
Oil seal *(Speedo drive pinion)*	(1)	**NKC105A**
Rear Axle Oil Seals;		
4 Speed/Early Automatic		
Pinion seal	(1)	**DAM5079**
Hub seal-Inner	(2)	**GHS181**
Hub seal-Outer	(2)	**GHS184**
5 Speed/Late Automatic		
Pinion seal	(1)	**UKC4995**
Hub seal-Inner	(2)	**GHS186**
Hub seal-Outer	(2)	**GHS187**

Engine/Gearbox Mountings

Engine Mounting (Rh) *(All)*	(1)	**UKC6710**
Engine Mounting (Lh);		
Early Models to 1977	(1)	**UKC3325**
Late Models from 1977	(1)	**UKC6710**
Gearbox Mounting		
TR7	(1)	**TKC1044**
TR8	(1)	**TKC2642**

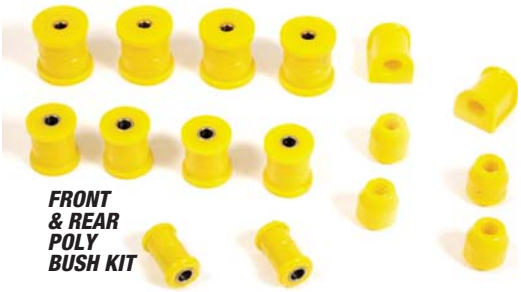

FRONT & REAR POLY BUSH KIT

Suspension Bushes

Please also refer to SUSPENSION PACKAGES & KITS.

Description	Qty Req.	Part No.
Anti-Roll Bar Mounting Bush;		
Standard	(2)	**UKC210**
Hard	(2)	**UKC210H**
Polyurethane	(2)	**UKC210P**
Anti-Roll Bar End Bush;		
Standard	(4)	**TKC6097**
Hard	(4)	**TKC6097H**
Polyurethane	(4)	**TKC6097P**
Front Track Arm Bush;		
Standard	(2)	**CRC1709**
Hard	(2)	**CRC1709H**
Polyurethane	(2)	**CRC1709P**
Rear Trailing Arm Bush; *Front & Rear.*		
Standard	(4)	**ULC1580**
Hard	(4)	**ULC1580H**
Polyurethane	(4)	**ULC1580P**
Rear Tie Bar Bush;		
Standard	(4)	**UKC5514**
Hard	(4)	**UKC5514H**
Polyurethane	(4)	**UKC5514P**

Kits

Please refer to relevant sections for detailed listings & kit contents.

Description	Qty Req.	Part No.
Clutch Kits *(3 piece; inc cover, plate & bearing);*		
4 Speed		
Original (Unipart)	(1)	**RB7038**
Aftermarket product	(1)	**RB7038P**
5 Speed		
Original (Unipart)	(1)	**RB7014**
Aftermarket product	(1)	**RB7014P**
Hose Kits;		
1975-78 *(Plastic exp bottle)*	(1)	**RB7072**
1978-79 *(Rh Mounting header tank)*	(1)	**RB7043**
1979 on *(Lh Mounting header tank)*	(1)	**RB7004**
Brake Kits		
Discs & Pads		
Standard TR7	(1)	**RB7164**
Uprated TR7*	(1)	**RB7164UR**
Discs/Pads/Shoes;		
4sp & Early Auto		
Standard TR7	(1)	**RB7134**
Uprated TR7* *Discs/Pads (std. shoes)*	(1)	**RB7134UR**
5sp & Late Auto		
Standard TR7	(1)	**RB7076**
Uprated TR7* *Discs/Pads (std. shoes)*	(1)	**RB7076UR**
**Comprise Grooved/Dimpled TR7 Discs & Kevlar Pads. See brake section for details.*		
Brake Kit (Uprated); *inc. Rover Vitesse 4 pot calipers and special vented discs.*	(1)	**RB7117**
Wheel Bearing Kits *(Per wheel);*		
Front hub *(all)*	(2)	**GHK1004**
Rear hub;		
4sp & Early Auto	(2)	**GHK1030**
5sp & Late Auto	(2)	**GHK1028**

Cables

Description	Qty Req.	Part No.
Accelerator Cable:		
Rhd	(1)	**UKC5875**
Lhd		
Short Routing Cable *110cm long*	(1)	**UKC3664**
Long Routing Cable *160cm long*	(1)	**RTC2922**
'Kick Down' Cable *(Automatic)*	(1)	**TKC3760**
Choke Cable *(Less switch);*		
Rhd	(1)	**TKC5297**
Lhd	(1)	**TKC5298**
Speedometer Cable;		
To VIN 402026 *(To 1981)* *Cable reset type speedo.*	(1)	**GSD287**
From VIN 402027 (1981 on) *Push button type speedo.*	(1)	**GSD388**
Handbrake Cable;		
4 speed & Early Automatic* **Automatics to VIN402000.*	(1)	**TKC3619**
5 speed & Late Automatic+ *+Automatics from VIN402001.*	(1)	**TKC2735**
Bonnet Release Cable	(1)	**630573**

Rubber Seals

Description	Qty Req.	Part No.
Windscreen Seal Kit	(1)	**RTC2063**
Rear Screen Seal *(Coupe)*	(1)	**WKC114**
Bonnet Seal Kit	(1)	**RB7093**
Air Intake Scoop-Seals;		
Upper Seal *(Air scoop to bonnet)*	(1)	**YKC1887**
Lower Seal *(To bulkhead)*	(1)	**YKC320**
End Grommet	(2)	**YKC3673**
Boot Lid Seal	(1)	**YKC68**
Door Aperture Seal;		
Convertible	(2)	**WKC4102**
Coupe	(2)	**WKC3827**
Door Waist Weatherstrip-Outer; *Convertible & Coupe models.*		
Right Hand	(1)	**YKC103**
Left Hand	(1)	**YKC102**
Door Glass Channel		
Convertible *(Front)*	(1)	**XKC3010**
Convertible *(Rear)*	(1)	**XKC3011**
Coupe *(Front/Rear)*	(1)	**YKC90**
Quarterlight Glass Seal *(Coupe);*		
Right Hand	(1)	**XKC133**
Left Hand	(1)	**XKC132**
Quarterlight Glass Seal *(Convertible);*		
Right Hand	(1)	**XKC2820**
Left Hand	(1)	**XKC2819**
Front Hood Header Seal *(Convertible)*	(1)	**ZKC3099**

TR7 (2.0 LITRE) SERVICE INFORMATION

SETTINGS & CAPACITIES

Engine Settings

Firing Order *Numbered from front of engine.*	1, 3, 4, 2.
Spark Plug Gap	0.024 - 0.026" (0.61 - 0.66 mm)
Contact Breaker Gap	0.014 - 0.016" (0.35 - 0.40 mm)
Dwell Angle	38° - 40°
Ignition Timing (Static)	10° B.T.D.C.
Ignition Timing (Idle)	10° B.T.D.C.
Inlet Valve Clearance (Cold)	0.008" (0.2 mm)
Exhaust Valve Clearance (Cold)	0.018" (0.5 mm)
Idle Speed (Neutral)	650 - 850 RPM
Fast Idle Speed (Cold)	1100 - 1300 RPM
Idle Mixture (% CO)	2.5 - 4.5%

Capacities

Cooling System; *Including Heater.*	with Plastic expansion bottle	7.4 Litre
	with Steel header tank	7.6 Litre
Engine Oil *Including oil filter.*	2.0 Litre Engine	4.5 Litre *(20/50)*
Gearbox;	4 Speed *(EP90)*	1.1 Litre
	5 Speed *(ATF)*	1.5 Litre
	Automatic *(ATF)* *Inc Torque Convertor & Oil Cooler.*	6.96 Litre
Rear Axle;	4 speed/Early Auto *(EP90)*	1.3 Litre
	5 speed/Late Auto *(EP90)*	1.1 Litre

Tyre Pressures - Standard 13" Wheels

(175 HR13 & 185/70 HR13 tyres);

Front (Cold)	24 Lbs Psi
Rear (Cold)	28 Lbs Psi

TO ORDER: 01522 568000
www.rimmerbros.co.uk

Description	Qty Req.	Part No.

Engine Service Kits

Kits are for vehicles fitted with standard ignition etc, and include; plugs, points, air/oil filters, condenser & fan belt. Deluxe kits also include distributor cap & rotor arm. (Suffuxed 'D' on part no.).

Engine Service Kit with Standard Oil Filter	(1)	**RB7044**
Engine Service Kit with Spin-on Oil Filter *(Conversion)*	(1)	**RB7032**

Description	Qty Req.	Part No.

QUICK REFERENCE

Engine Gaskets & Seals

Head Gasket Set;		
With Standard Head Gasket	(1)	**GEG1220**
With Extra Thick Head Gasket	(1)	**GEG1220XT**
Gasket is 0.020" (0.55mm) thicker than standard.		
Head Gasket only;		
Standard Gasket	(1)	**GEG3304**
Extra Thick Gasket	(1)	**GEG3304XT**
Gasket is 0.020" (0.55mm) thicker than standard.		
Sump Gasket Set *(With oil seals)*	(1)	**GEG278**
Sump Gasket only	(1)	**GEG555**
Oil Seals;		
Crankshaft Front *(Timing cover)*	(1)	**UKC3344**
Rear	(1)	**143148**
Inlet Manifold Gasket	(1)	**AJM679**
Exhaust Downpipe Gasket	(1)	**GEG732**
Exhaust Manifold Gasket Set	(1)	**RB7006**
Manifold to cylinder head-If required.		
Cam Cover Gasket	(1)	**GEG447**
'U' shaped End Plug *(Cam Cover)*	(2)	**144488**
Thermostat Gasket	(1)	**GTG103**
Core Plug Set	(1)	**RB7000**
For block & cylinder head.		

For full details please refer to relevant sections.

Description	Qty Req.	Part No.

RECONDITIONED FULL ENGINE SPECIFICATION

All our Reconditioned `Full Engines' have a high rebuild specification and are suitable for unleaded fuel.

- Crankshaft Re-ground
- New Cam Chain, Tensioner & Guides
- New Main Bearings
- New Inlet Valves
- New Thrust Washers
- New Exhaust Valves
- Cylinder Block Re-bored
- New Valve Springs
- New Pistons & Rings
- New Valve Guides
- New Big end Bearings
- New Oil Seals
- Camshaft Re-profiled
- New Oil Pump & Switch
- New Cam Followers
- Sump & Timing Cover Fitted

BENCH TESTING

Apart from having a multitude of new parts & components fitted - and with a 12 Month/12,000 Mile Warranty - our engine units are run on a test bed after assembly. During the test-run period (at varying engine speeds), all external joints and seals are checked, and the water temperature and oil pressure are monitored to verify correct operation. After the bench test, the engines undergo a final inspection and are prepared for sale.

NOTE: *All units are drained of oil & water before despatch.*

Our Full Engines are assembled ready to accept manifolds, water pump and other ancillaries. Additional installation information and running-in details are supplied with every unit. We can also supply a 'Full Engine Build-up Kit' that includes all necessary gaskets/oil filter etc, enabling you to install the full engine in your vehicle. Alternatively, fitting can be arranged locally in Lincoln if required, please enquire for details & costs.

Please note; *if you are comparing prices may we suggest that specifications are also compared.*

TR7 ENGINE REBUILD KIT - WITH NEW UNLEADED HEAD!

FOR THE DIY ENTHUSIAST!

This kit includes everything you are likely to need, including a brand new unleaded spec cylinder head shell (kit is also available less the head if required). We assume you'll have the block re-bored (or buy one of our new blocks) and any other machining work done as required.

Please note that your crankshaft and camshaft are required in exchange. For export customers, the crankshaft or camshaft can be removed from the kit, a price adjustment made, allowing you to have the re-grinding done locally.

Kit Contents:-

- Crankshaft - re-ground *(Exchange)*
- Bearing shells to suit
- Thrust washers (+.005")
- Piston set (HC)
  inc. rings/pins, oversize +.020". (or standard size if buying new block). Please state if +.040" required
- Oil Pump & filter
- Sump gasket set inc. oil seals
- Timing chain kit *(chain, tensioner & guides)*
- Chain sprockets *(engine set)*
- Cylinder head shell (new) - unleaded spec
- Head assembly kit
  inc camshaft recon (exchange), followers, valves (unleaded spec) & springs.
- Head studs and nuts *(set 5)*
- Head gasket set
- Water pump overhaul kit
- Core plug engine set

TR7 Engine Rebuild Kit	(1)	**RB2001**

RECONDITIONED SHORT ENGINE SPECIFICATION

All our Reconditioned `Short Engines' are built to the following specification;

- Crankshaft Re-ground
- Cylinder Block Re-bored
- New Main Bearings
- New Pistons & Rings
- New Big end Bearings
- New Oil Pump Supplied
- New Thrust Washers

Please note; *The jackshaft (Part No 215207) is not supplied with a short engine. Additional installation information & running-in details are supplied with every unit. Don't forget that we supply all the necessary gasket sets/ components etc, required to build-up a short engine.*

Description	Qty Req.	Part No.

Full Engines

Full Engine *(UK Specification);*
See 'Specification' and 'Build-up' information.

Reconditioned *(Unleaded)*	(1)	**RB7008R**
New *(Unleaded)* *Using 10/10 crank.*	(1)	**RB7008**
Engine Build-up Kit *Inc gaskets,oil filter etc.*	(1)	**RB7012**

Full Engine *(USA Specification);*
USA spec Full Engines are built with low compression pistons.
The cylinder head has provision for installing the air rail.

Reconditioned *(Unleaded)*	(1)	**RB7020R**
New *(Unleaded)* *Using 10/10 crank.*	(1)	**RB7020**
Engine Build-up Kit *Inc gaskets,oil filter etc.*	(1)	**RB7012**

For Engine oils & Anti-freeze please refer to Accessories.

TR7 FULL ENGINE & COMPONENTS

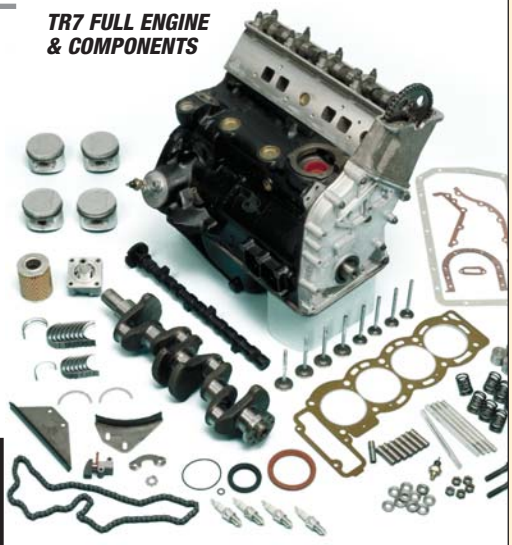

ENGINE BALANCING

We offer an engine balancing service for Full or Short engines, which includes crankshaft & conrods, and if required, crankshaft pulley, flywheel & clutch. *Please enquire for details.*

TECHNICAL JOTTINGS & RELATED COMPONENTS

Full Engine Build-up

When building up a Full Engine to a complete assembly, check the condition of your old water pump, if unsure, replace or overhaul with a reconditioning kit.

The condition of the radiator is crucial to ensure proper and efficient cooling - either replace or have tested professionally (see Warranties), as are all the hoses and thermostat, we strongly recommend these are examined carefully, or replaced as a matter of course. Engine mountings, clutch etc, should also be inspected and renewed where necessary.

Ensure correct strength anti-freeze is used in the cooling system. Carburettors should be in good working order with mixture & balance set correctly.

Please familiarise yourself with the running-in and head re-torquing instructions on the card supplied with every engine unit. If this card has become separated from the engine when you take delivery, please contact us.

'NEW' Full Engines

Over the years we have been constantly 'buying-up' large stocks of Brand New Short Engines and Cylinder Heads from Factory sources (these supplies are now almost exhausted). So, for the discerning owner who would prefer a New engine to reconditioned, you now have the choice.

Our Full Engines are actually built-up using a New Short Engine & Cylinder Head shell, with new components used throughout* (exceptions may include the sump pan and timing cover, when serviceable reconditioned units may be fitted). Full Engines are assembled ready to accept manifolds, water pump & other ancillaries. Additional installation information and running-in details are supplied with every unit.

We can also supply a 'Full Engine Build-up Kit' that includes all necessary gaskets/oil filter etc, enabling you to install the full engine in your vehicle. Alternatively, fitting can be arranged locally in Lincoln if required, please enquire for details & costs.

Bench Testing - New Full Engines

Bench testing can also be carried out on new engines at an additional cost, please enquire for details.

New Short Engines

New* Short engines are supplied less the oil pump & jackshaft.

The warranty on new engines is that of our reconditioned units - please refer to the 'Warranties' section in our price guide.

**A reground 10/10 crank is used for both new full and short engines. These units are normally built to order.*

Short Engines

See 'Specification' and 'Build-up' information.
All short engines supplied less jackshaft.

Short Engine *(UK Specification);*
High compression - 9.25:1.
See also Low compression Short Engines.

Reconditioned *Includes new oil pump.*	(1)	**RB7026R**
New *Using 10/10 crank. Supplied less oil pump.*	(1)	**RB7026**

Short Engine *(USA Specification);*
Low compression - 8.00:1.

Reconditioned *Includes new oil pump.*	(1)	**RB7031R**
New *Using 10/10 crank. Supplied less oil pump.*	(1)	**RB7031**

Note; *using a low compression short engine (or pistons) can help prolong engine life. This may be useful to UK/European customers if the cylinder head has been 'overskimmed', resulting in too high a compression ratio. See 'Cylinder Head & Fittings' for details of our extra thick (+ 0.020"/0.55mm) head gasket. For Engine oils & Anti-freeze please refer to Accessories.*

TR7 SHORT ENGINE & COMPONENTS

TECHNICAL JOTTINGS & RELATED COMPONENTS

Short Engine Build-up

When building up a short engine to a complete assembly, check the condition of timing chain, guides, tensioner, sprockets, water pump (replace or overhaul with reconditioning kit), jackshaft, cylinder head face (for flatness), valves, guides, cam followers, camshaft etc, and replace where necessary.

We supply all these components separately if required along with gasket sets, oil seals, spigot bush, oil filter etc.

The condition of the radiator is crucial to ensure proper and efficient cooling - either replace or have tested professionally (see Warranties), as are all the hoses and thermostat, we strongly recommend these are examined carefully, or replaced as a matter of course.

Ensure correct strength anti-freeze is used in the cooling system. Carburettors should be in good working order with mixture and balance set correctly.

SHORT ENGINE

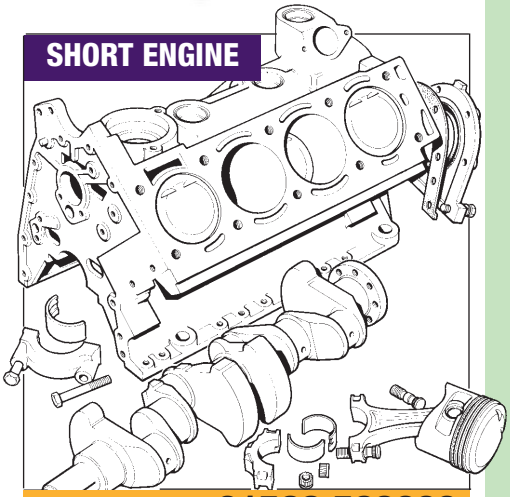

TO ORDER: 01522 568000
www.rimmerbros.co.uk

Cylinder Block & Components

Description	Qty Req.	Part No.
Engine Cylinder Block *(Bare);*		
New	(1)	**RB7040**
Reconditioned	(1)	**RB7040R**
Cylinder Liner	(4)	**158700**
Core Plug Set *For block and cylinder head.*	(1)	**RB7000**
Bolt *(Main bearing cap to block)*	(10)	**UKC1979**
Dowel	(2)	**PU804**
Dowel	(2)	**UKC1937**
Engine Lifting Eye	(1)	**155543**
Bolt *(Lifting eye to block)*	(2)	**SH606061**
Washer-Flat *(For HU905)*	(2)	**GHF333**
Core Plug	(1)	**144687**
Bush *(Water pump spindle)*	(1)	**145022**
Dowel (Oil gallery)	(1)	**DP306**
Core Plug	(2)	**144648**
Head Stud *(Cylinder head to block)*	(5)	**149080**
Nut *(For head stud 149080)*	(5)	**UKC9954**
Washer *(For head stud 149080)*	(5)	**UKC9786**
Core Plug	(1)	**144688**
Core Plug	(1)	**153972**
Plug-Oil Gallery	(1)	**129077**
Dowel	(2)	**DP619**
Dowel	(2)	**UKC1937**
Stud *(4 speed gearbox fitted)*	(2)	**TE605181**
Stud *(5 speed gearbox fitted)*	(2)	**TD819**
Drain Plug *(Cylinder block)*	(1)	**129077**
Fibre Washer	(1)	**WF511A**

BRAND NEW TR7 BLOCKS ARE AVAILABLE

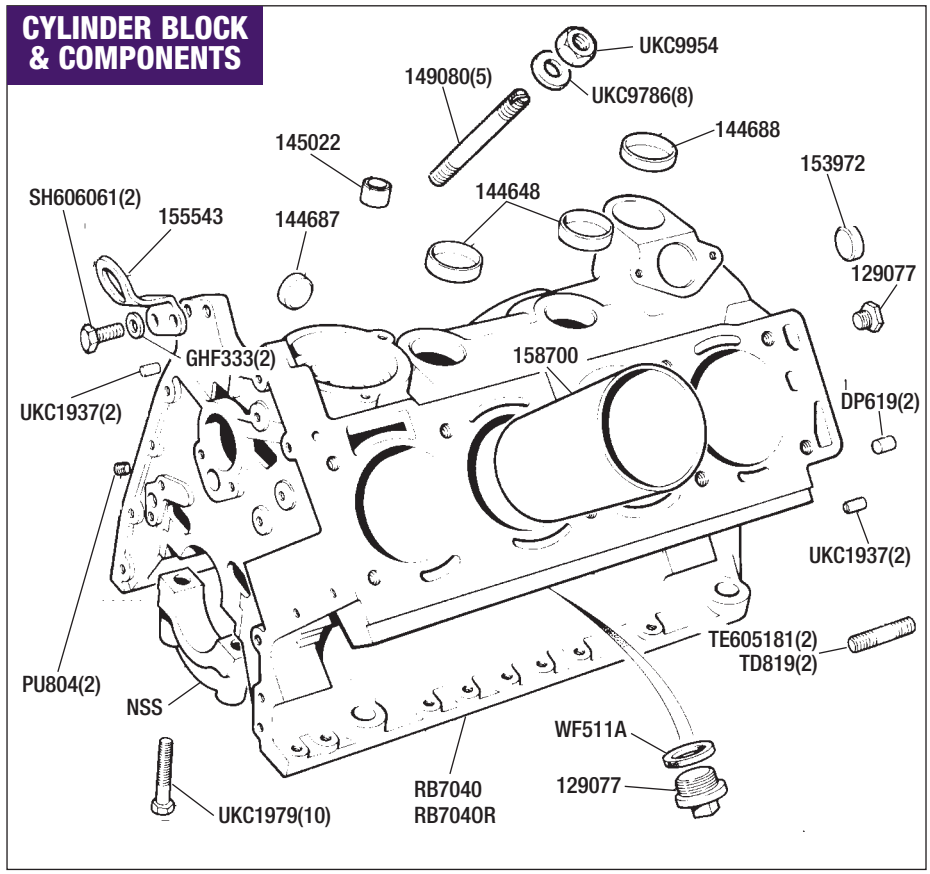

Rear Engine Plate & Oil Seal

See also; ***Crankshaft & Flywheel.***

Description	Qty Req.	Part No.
Rear Engine Plate; *See TECHNICAL JOTTINGS - Flywheels.*		
4sp/5sp Manual & Auto Gearbox	(1)	**TKC895**
5 Speed Gearbox	(1)	**TKC4176**
Bolt-Engine Plate; 4sp/5sp & Auto Gearbox	(6)	**GHF120**
Setscrew-Engine Plate; 5 Speed Gearbox	(6)	**144281**
Housing & Oil Seal	(1)	**143149**
Oil Seal *(Crankshaft-rear)*	(1)	**143148**
Gasket *(Housing)*	(1)	**143845**
Setscrew *(Seal housing)*	(2)	**SH604071**
Washer-Spring	(1)	**GHF331**
Setscrew *(Seal housing)*	(4)	**GHF117**
Washer-Spring	(1)	**GHF331**

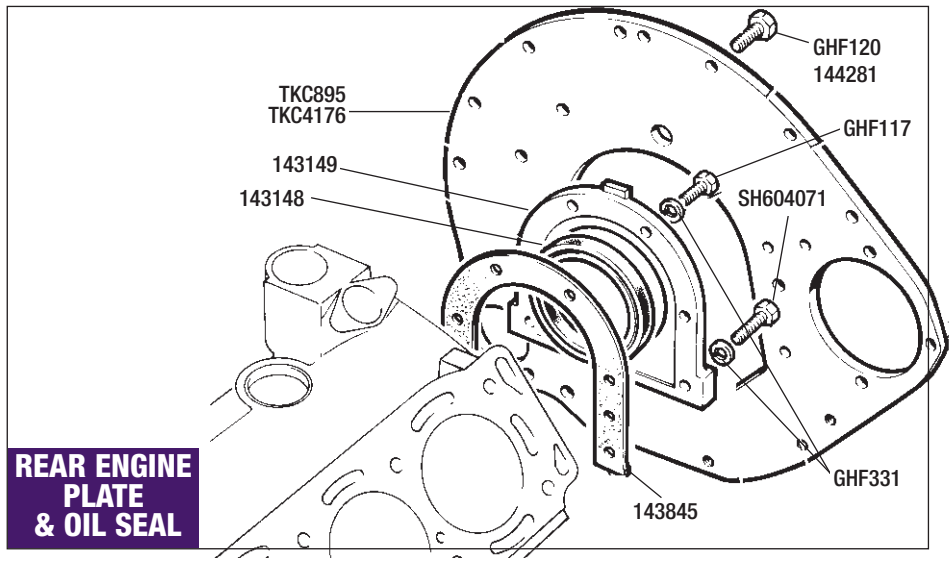

Description | Qty Req. | Part No.

SUMP PAN & DIPSTICK

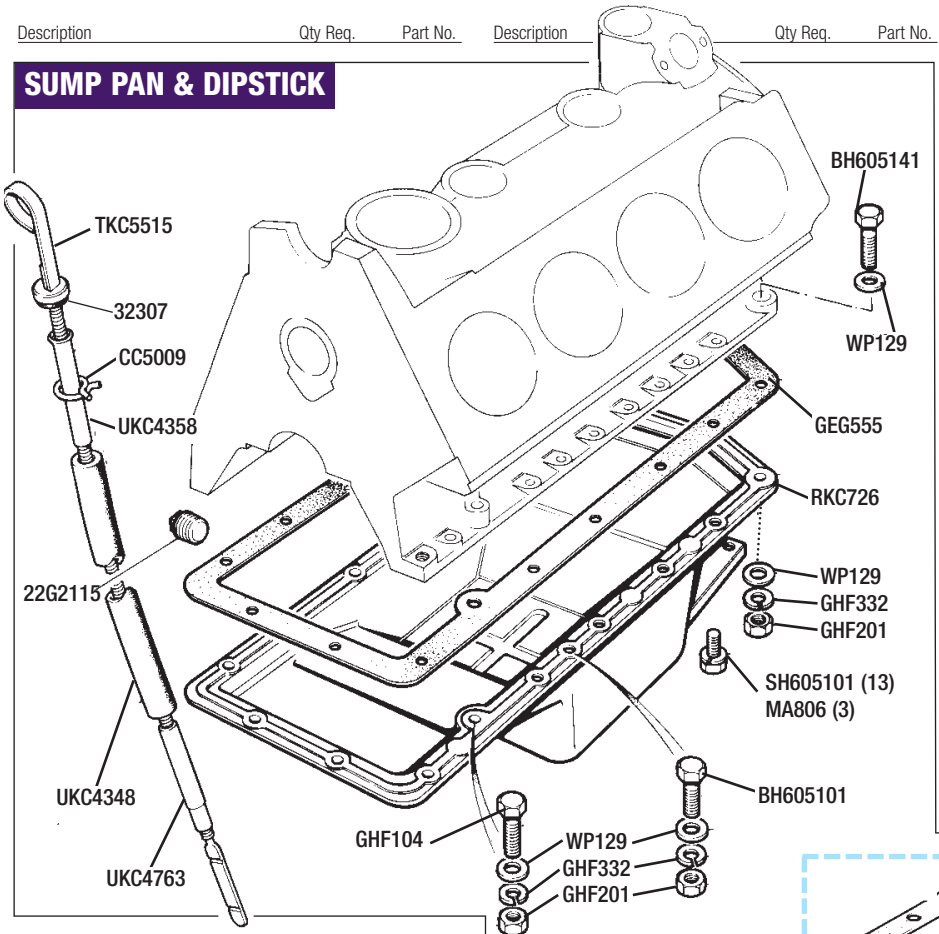

Sump Pan & Dipstick

For Engine oils & anti-freeze please refer to Accessories.
See also; ***Oil Pump, Filter & Oil Suction.***

Description	Qty Req.	Part No.
Sump Pan	(1)	**RKC726**
Sump Gasket Set		
With oil seals	(1)	**GEG278**
Without oil seals	(1)	**GEG278K**
Sump Gasket	(1)	**GEG555**
Drain Plug	(1)	**22G2115**
Bolt *(Block to sump)*	(2)	**BH605141**
Washer *(for BH605141)*	(4)	**WP129**
Washer-Spring *(for BH605141)*	(2)	**GHF332**
Nut *(for BH605141)*	(2)	**GHF201**
Setscrew *(Sump to block)*	(13)	**SH605101**
Setscrew *(Sump to block)*	(3)	**MA806**
Bolt	(2)	**BH605101**
Washer *(for BH605101)*	(2)	**WP129**
Washer-Spring *(for BH605101)*	(2)	**GHF332**
Nut *(for BH605101)*	(2)	**GHF201**
Bolt	(2)	**GHF104**
Washer *(for GHF104)*	(2)	**WP129**
Washer-Spring *(for GHF104)*	(2)	**GHF332**
Nut *(for GHF104)*	(2)	**GHF201**
Dipstick	(1)	**TKC5515**
Felt Washer (dipstick)	(1)	**32307**
Insert Tube *(Top)*	(1)	**UKC4358**
Clip *(for UKC4358)*	(1)	**CC5009**
Rubber Tube *(Flexible)*	(1)	**UKC4348**
Insert Tube *(Lower-cylinder block)*	(1)	**UKC4763**

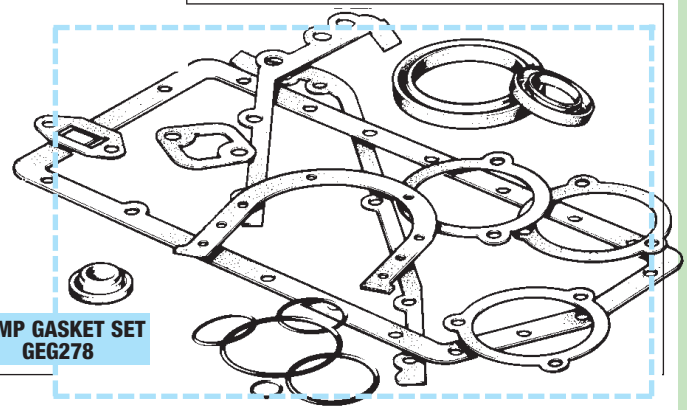

SUMP GASKET SET GEG278

Crankshaft & Flywheel

See also; ***Rear Engine Plate & Oil Seal, and Timing Cover & Pulley.***

Description	Qty Req.	Part No.
Crankshaft;		
New *(Less shells)*	(1)	**RKC514**
Re-ground *(Inc shells)*	(1)	**RKC514R**
Woodruff Key	(1)	**144948**
Oil Seals;		
Crankshaft-Front *(Timing cover)*	(1)	**UKC3344**
Crankshaft-Rear *(Main)*	(1)	**143148**
Main Bearing Set-Crankshaft;		
Standard size	(1)	**RTC1755**
Oversize + 0.010"	(1)	**RTC1755.010**
Oversize + 0.020"	(1)	**RTC1755.020**
Oversize + 0.030"	(1)	**RTC1755.030**
Oversize + 0.040"	(1)	**RTC1755.040**
Oversize + 0.060"	(1)	**RTC1755.060**
Thrust Washers (Pair);		
Standard size	(1)	**RTC2836**
Oversize + 0.005"	(1)	**RTC2837.005**
Oversize + 0.010"	(1)	**RTC2837.010**
Spigot Bush; *(Manual transmission)*		
Brass type	(1)	**150763**
Needle Roller type	(1)	**UKC8154**
Spigot Bush & Spacer; *(Automatic transmission)*		
Bush	(1)	**156694**
Distance Piece	(1)	**UKC899**
Spacer	(1)	**UKC6162**
Flywheel Assembly *(Manual);* *See TECHNICAL JOTTINGS - Flywheels.*		
4sp & early 5sp Gearbox	(1)	**TKC411**
5 Speed Gearbox *(Late)*	(1)	**RKC3918**
Drive Plate Assembly *(Automatic)*	(1)	**TKC413**
Ring Gear *(All)*	(1)	**214599**
Retaining Plate;		
Manual	(1)	**UKC998**
Automatic	(1)	**UKC1099**
Dowel *(Manual only)*	(3)	**UKC1937**
Bolt *(Flywheel to crankshaft);*		
Manual Transmission	(8)	**UKC3044**
Automatic Transmission	(8)	**UKC6269**
Jackshaft	(1)	**215207**
Keep Plate *(For shaft 215207)*	(1)	**143139**
Screw *(For keep plate 143139)*	(2)	**144281**

CRANKSHAFT & FLYWHEEL

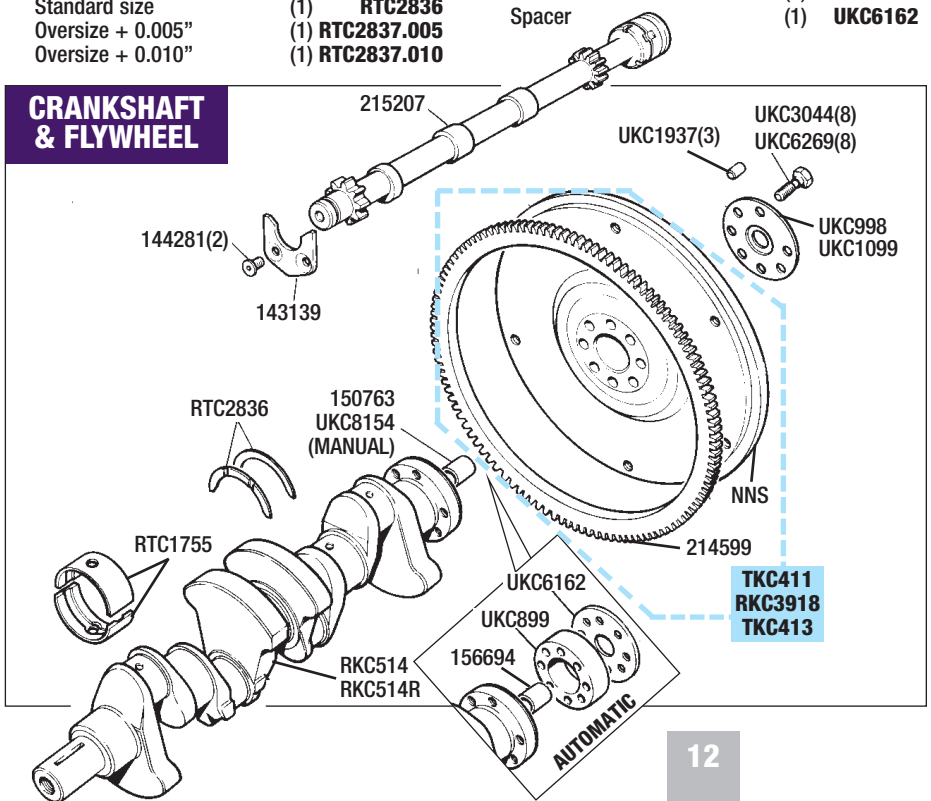

TECHNICAL JOTTINGS

TR7 - Early & Late Flywheels

From engine number CG8894 all TR7's fitted with 5 speed gearboxes were produced with a modified flywheel, engine plate and different engine plate attatchment setscrews (with countersunk head). As this later modified flywheel is now the only type available, early 5 speed & 4 speed vehicles can be fitted with this later flywheel, but only with the corresponding setscrews. The early type engine plate will require minor (but easy) modifications to accept the six later type countersunk head setscrews (part No 144281) in lieu of the bolts GHF120.

TO ORDER: 01522 568000
www.rimmerbros.co.uk

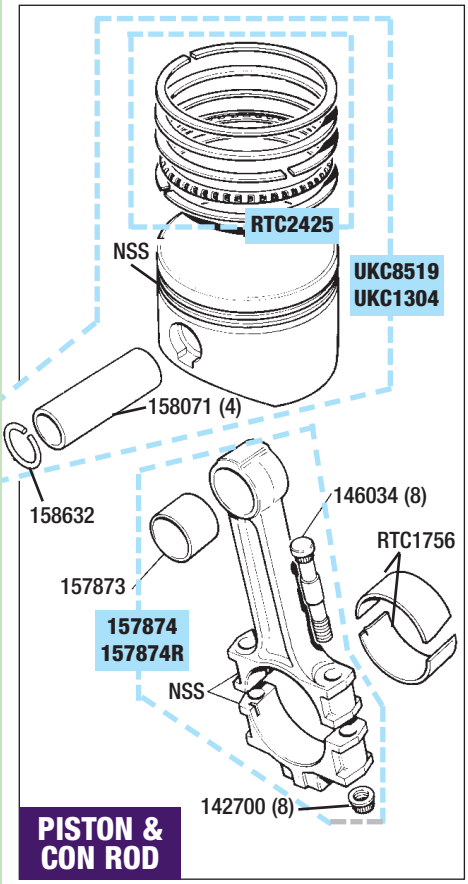

Piston & Con Rod

See also; ***Cylinder Block & Components, and Crankshaft & Flywheel.***

Description	Qty Req.	Part No.
PISTON SETS		
Piston Set *(UK specification);* *High Compression 9.25:1. See Technical Jottings. Piston set comprises 4 high compression pistons complete with rings and gudgeon pins.*		
Standard size	(1)	**UKC8519**
Oversize + 0.020”	(1)	**UKC8519.020**
Oversize + 0.030”	(1)	**UKC8519.030**
Oversize + 0.040”	(1)	**UKC8519.040**
Piston Set *(Usa specification);* *Low Compression 8.00:1. See Technical Jottings. Piston set comprises 4 low compression pistons complete with rings and gudgeon pins.*		
Standard size	(1)	**UKC1304**
Oversize + 0.020”	(1)	**UKC1304.020**
Oversize + 0.030”	(1)	**UKC1304.030**
Oversize + 0.040”	(1)	**UKC1304.040**
Piston *(See piston set)*	(1)	**NSS**
RING SETS		
Piston Ring Set *(Per vehicle);*		
Standard size	(1)	**RTC2425**
Oversize + 0.020”	(1)	**RTC2425.020**
Oversize + 0.030”	(1)	**RTC2425.030**
Oversize + 0.040”	(1)	**RTC2425.040**
Gudgeon Pin	(4)	**158071**
Circlip	(8)	**158632**
CONROD ASSEMBLY		
Con Rod Assembly;		
New	(4)	**157874**
Reconditioned	(4)	**157874R**
Small End Bush (4)	(4)	**157873**
Bolt-Con Rod	(8)	**146034**
Nut-Con Rod	(8)	**142700**
Bearing Set *(Big ends);*		
Standard size	(1)	**RTC1756**
Oversize + 0.010”	(1)	**RTC1756.010**
Oversize + 0.020”	(1)	**RTC1756.020**
Oversize + 0.030”	(1)	**RTC1756.030**
Oversize + 0.040”	(1)	**RTC1756.040**
Oversize + 0.060”	(1)	**RTC1756.060**

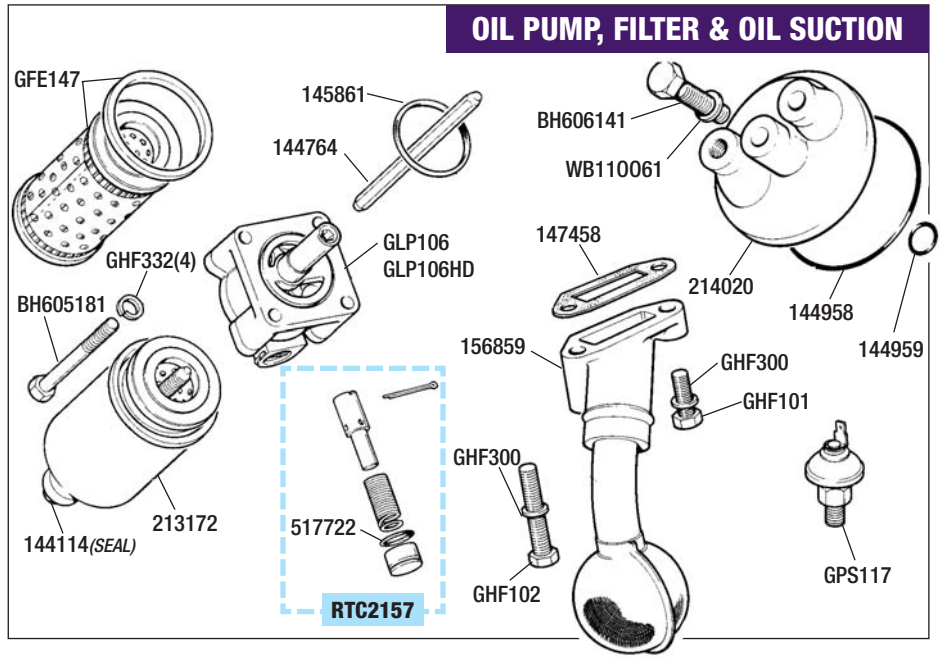

Oil Pump, Filter & Oil Suction

For Engine oils & Anti-freeze please refer to Accessories.
See also; ***Oil Pan & Dipstick and Spin-on Filter Conversion.***

Description	Qty Req.	Part No.
Oil Pump Assembly; *Includes ‘O’ ring & relief valve.*		
Standard	(1)	**GLP106**
Uprated	(1)	**GLP106HD**
Oil Pump Drive Spindle	(1)	**144764**
‘O’ Ring *(Pump to block)*		
Standard	(1)	**145861**
Uprated	(1)	**145861HD**
‘O’ Ring *(Oil pump internal - Rotor)*	(1)	**517721**
Bolt-Oil Pump	(4)	**BH605181**
Washer-Spring	(4)	**GHF332**
Relief Valve Kit *(Oil Pump)*	(1)	**RTC2157**
‘O’ Ring-Relief Valve	(1)	**517722**
Oil Filter Element		
Standard	(1)	**GFE147**
Cartridge Type	(1)	**RR1243**
Filter Bowl Assembly	(1)	**213172**
Seal/Washer Bolt to Bowl *Not illustrated.*	(1)	**144114**
Oil Transfer Housing	(1)	**214020**
Bolt *(For 214020)*	(1)	**BH606141**
Washer *(For BH606141)*	(1)	**WB110061**
‘O’ Ring-Large	(1)	**144958**
‘O’ Ring-Small	(1)	**144959**
Oil Pick-up Pipe/Strainer	(1)	**156859**
Gasket *(Pick-up pipe)*	(1)	**147458**
Bolt-Long *(Pick-up pipe)*	(1)	**GHF102**
Washer	(1)	**GHF300**
Bolt-Short *(Pick-up pipe)*	(1)	**GHF101**
Washer	(1)	**GHF300**
Oil Pressure Switch	(1)	**GPS117**

Spin-on Oil Filter Conversion

This kit converts the standard ‘Bowl’ type Filter to the more efficient ‘Spin-on’ Cartridge type which makes filter changing easier & cleaner.

RECOMMENDED FOR ALL OWNERS!

Adaptor *Vehicles without engine oil cooler*	(1)	**RB7016**
Adaptor *Vehicles with engine oil cooler.*	(1)	**RB7048**
Oil Filter Cartridge	(1)	**RR1243**
Service kit for adaptor *Replacement O’ rings.*	(1)	**RB7016SK**

Oil Pressure Gauge Kit

Oil Pressure Gauge Kit	(1)	**RX1351/0**
‘T’ Piece *Use if retaining oil pressure warning light.*	(1)	**RX1352**
Bracket *(for remote mounting of gauge)*	(1)	**RB7050**

TECHNICAL JOTTINGS

UK & European Models
Compression Ratio too High ?

If your cylinder head has been ‘over-skimmed’ resulting in too high a compression ratio, or you just want to lower the compression (and help prolong engine life), then you may wish to consider rebuilding your engine using low compression pistons. This can also be acheived by using a thick head gasket (+ 0.020”/0.55mm).

Timing Chain & Gear Assembly

Description	Qty Req.	Part No.
Timing Chain		
Standard	(1)	212958
German *(pre-stretched)*	(1)	212958G
Timing Chain Kit 1 *Kit includes; timing chain, 2 chain guides, hydraulic tensioner, oil seal & gaskets.*		
With Standard Chain	(1)	RB7046
With German Chain	(1)	RB7046G
Timing Chain Kit 2 *As Kit 1 but also includes crank, jackshaft and cam sprockets.*		
With Standard Chain	(1)	RB7046S
With German Chain	(1)	RB7046GS
Chain Guide *(Curved)*	(1)	147907
Setscrew *(Chain guide)*	(2)	SH605051
Washer-Spring	(2)	GHF332
Washer-Flat	(2)	GHF301
Sprocket-Jackshaft	(1)	144895
Dowel	(1)	UKC1937
Bolt *(Sprocket to jackshaft)*	(1)	148008
Washer-Special	(1)	148009
Hydraulic Chain Tensioner	(1)	151089
Bolt *(Tensioner to block)*	(2)	BH604101
Washer-Spring	(2)	GHF331
Tensioner Backplate	(1)	151277
Oil Slinger	(1)	143311
Woodruf Key	(1)	144948
Sprocket-Crankshaft	(1)	143257
Shim (0.004") *(Use as required)*	(a/r)	145275
Shim (0.006") *(Use as required)*	(a/r)	145276
Support Bracket *(Camshaft sprocket)*	(1)	214930
Bolt *(For 214930)*	(3)	SH605051
Washer-Spring	(3)	GHF332
Sprocket-Camshaft	(1)	149789
Locating Pin (Cam)	(1)	149787
Locking Plate	(1)	154161
Setscrew *(Sprocket to camshaft)*	(2)	SH604041
Chain Guide *(Straight)*	(1)	148115

Timing Cover & Fittings

Description	Qty Req.	Part No.
Timing Cover	(1)	UKC954
Gasket *(Cover to block - short)*	(1)	144666
Gasket *(Cover to block - long)*	(1)	145916
Oil Seal *(Crankshaft front)*	(1)	UKC3344
Pulley-Crankshaft *Not suitable when air conditioning fitted.*	(1)	TKC47
Bolt *(Crankshaft pulley)*	(1)	156499
Washer	(1)	148168
Fan Belt	(1)	GCB10900
Quadrant *(Timing marks)*	(1)	UKC5446
Screw (Quadrant)	(2)	YM506
TIMING COVER FIXINGS		
Bolt *(4" long)*	(1)	BH605321
Washer-Flat	(1)	GHF301
Nut	(1)	GHF201
Setscrew	(2)	SH605101
Washer-Flat	(2)	GHF301
Nut	(2)	GHF201
Bolt *(2 5/8" long)*	(2)	BH605211
Bolt *(2 1/4" long)*	(6)	BH605181
Washer-Flat	(5)	GHF301
Bolt *(2" long)*	(1)	HB816
Washer-Flat	(1)	RTC610A
Washer-Fibre	(1)	WF537
Bolt	(1)	BH605151
VEHICLES WITH AIR CONDITIONING *See also; **COOLING & HEATING - Air Conditioning.***		
Pulley-Crankshaft	(1)	TKC457
Bolt *(Crankshaft pulley)*	(1)	UKC639
Washer	(1)	148168
Woodruff Key	(1)	UKC636
Drive Belt *(Air compressor)*	(1)	GFB10635

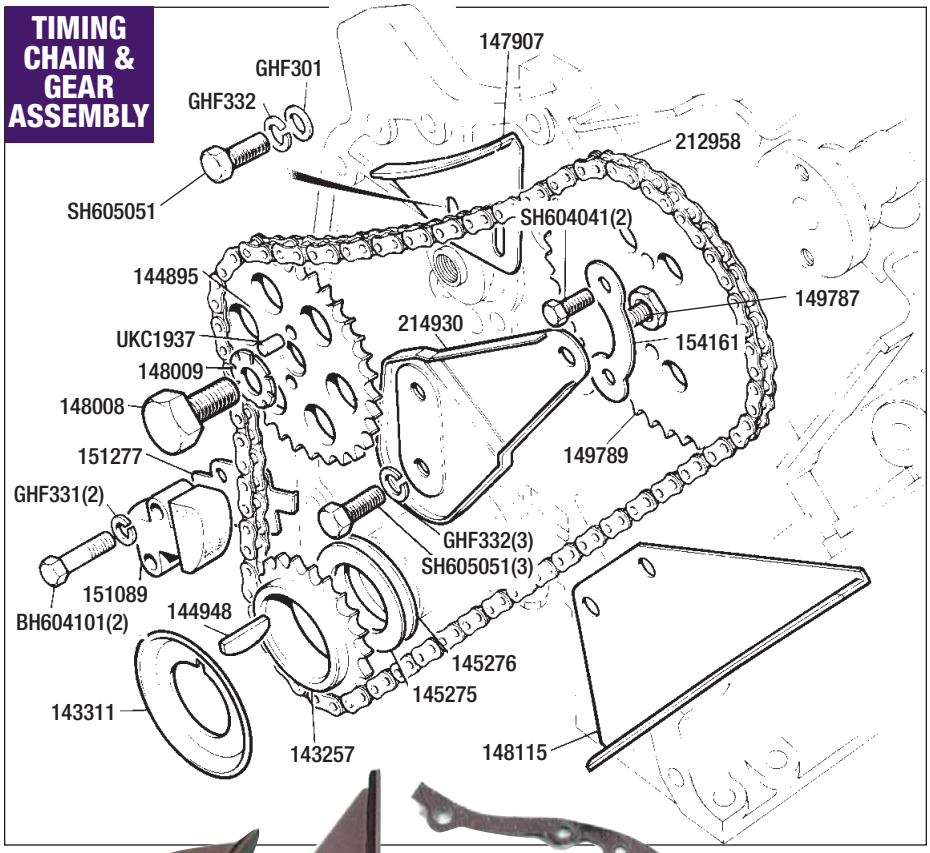

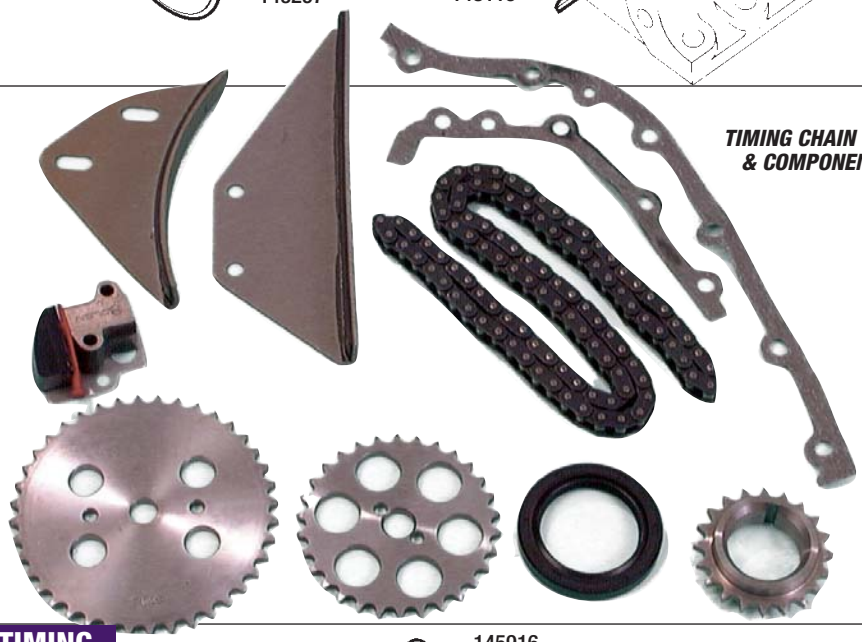

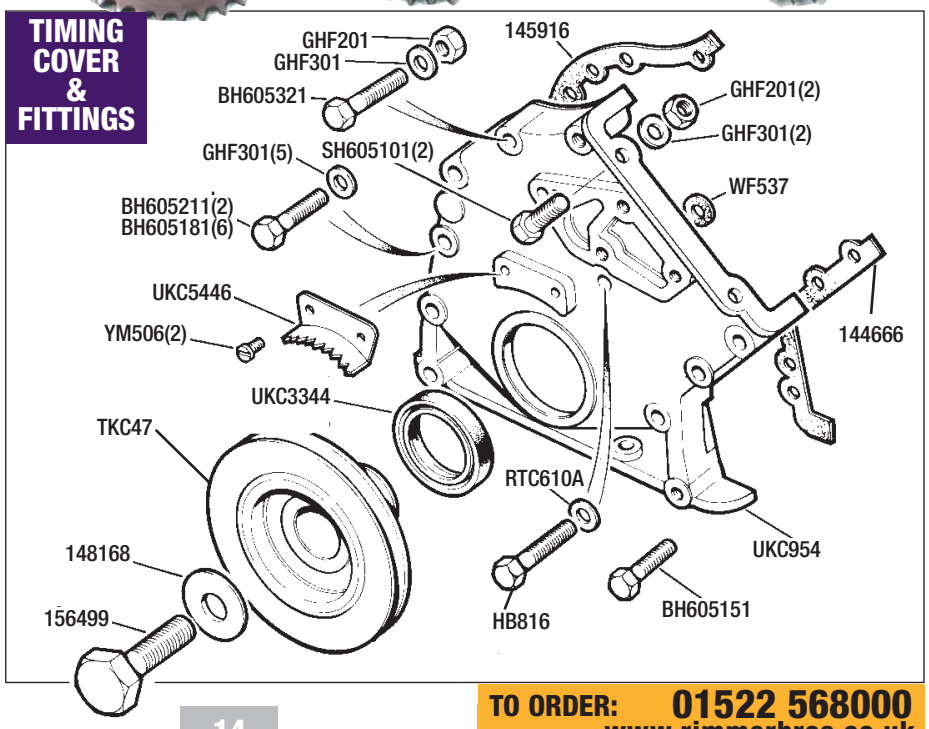

TO ORDER: 01522 568000
www.rimmerbros.co.uk

Description | Qty Req. | Part No.

NEW & RECON CYLINDER HEADS

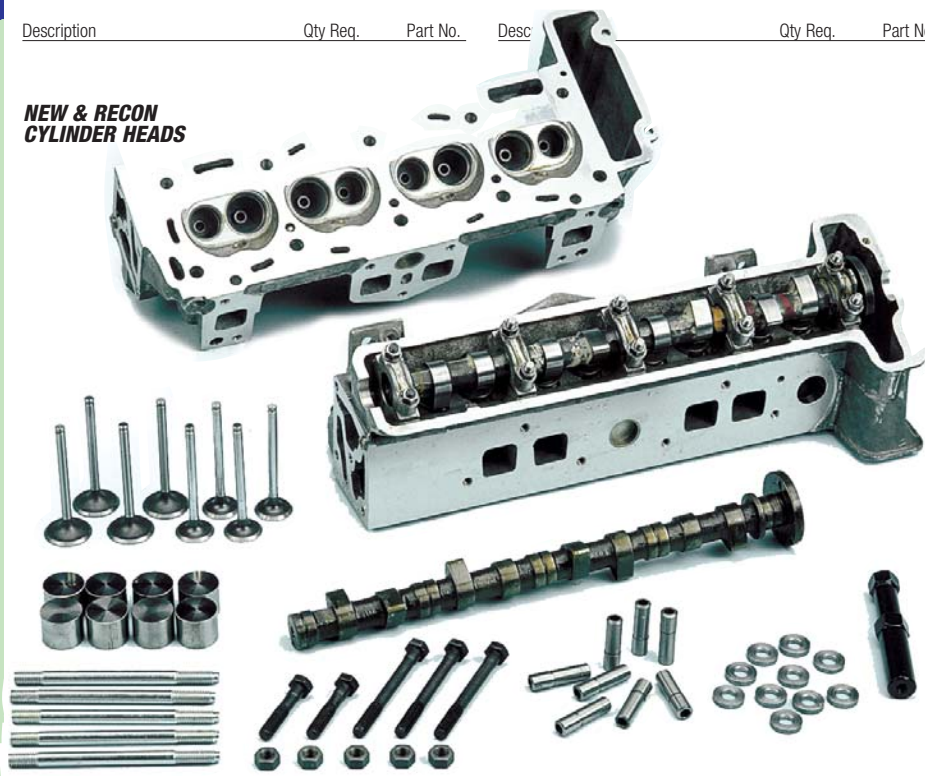

Cylinder Head & Fittings

Cylinder Head Assembly; *(UK Specification)* *Ready to fit (shimmed). Complete with valves, cam etc. Unleaded specification.*		
Reconditioned	(1)	**RB7011R**
New	(1)	**RB7011**
Cylinder Head Assembly; *(USA Specification)* *Ready to fit (shimmed). Complete with valves, cam etc. Unleaded specification. Modified for use with EGR valve pipework.*		
Reconditioned	(1)	**RB7022R**
New	(1)	**RB7022**
Cylinder Head Shell (New) *New, bare shell fitted with valve seats & guides*		
UK Spec	(1)	**TKC4522**
USA Spec *With provision for EGR pipework.*	(1)	**TKC4522EGR**
Cylinder Head Rebuild Kit *Kit includes; Camshaft, followers, valves,valve springs, guides & core plugs. Also available less camshaft (RB7035NC).*	(1)	**RB7035**
Head Gasket Set;		
With Standard Head Gasket	(1)	**GEG1220**
With Extra Thick Head Gasket *Gasket is 0.020" (0.55mm) thicker than standard.*	(1)	**GEG1220XT**
Head Gasket only;		
Standard Gasket	(1)	**GEG3304**
Extra Thick Gasket *Gasket is 0.020" (0.55mm) thicker than standard.*	(1)	**GEG3304XT**
Inlet Manifold Gasket	(1)	**AJM679**
Exhaust Downpipe Gasket	(1)	**GEG732**

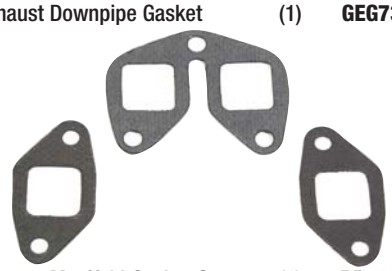

Exhaust Manifold Gasket Set *Manifold to cylinder head-If required.*	(1)	**RB7006**
Camshaft;		
New	(1)	**214643**
Re-profiled	(1)	**214643R**
Cam Lube *(for assembly)*	(1)	**RX1358**
'U' shaped End Plug *(Cam Cover)*	(2)	**144488**
Stud *Camshaft retaining cap & Cam cover.*	(10)	**148323**
Locating Dowel	(3)	**148321**
Locating Dowel	(5)	**150323**

Desc | Qty Req. | Part No.

Nut *(For 148323 stud)*	(10)	**GHF201**
Washer *(For 148323 stud)*	(10)	**GHF301**
Cam Follower/Tappet		
Standard size	(8)	**146594**
Oversize + 0.010"	(8)	**146594.010**
Tappet Adjusting Shim *(See panel opposite)*		
Shim Set *(Assortment of 10 shims)*	(1)	**RS2034**
Split Collets *(Sold in pairs)*	(8)	**106663**
Collar *(Spring Upper)*	(8)	**148886**
Valve Spring	(8)	**151763**
Collar *(Spring Lower)*	(8)	**148885**
Valve Guide	(8)	**142476**
Exhaust Valve	(4)	**155524**
Inlet Valve	(4)	**UKC181**
Valve Seat Insert;		
Exhaust	(4)	**150863**
Inlet	(4)	**UKC1856**
Core Plug Set *For cylinder head and block.*	(1)	**RB7000**
Core Plug	(2)	**143867**
Housing-Water Transfer	(1)	**TKC1242**
Gasket *(Transfer housing)*	(1)	**UKC3195**
Setscrew	(1)	**SH505061**
Washer-Flat	(1)	**GHF301**
Bolt	(4)	**HU857**
Washer-Flat	(4)	**GHF301**
Adaptor *(Heater feed)*	(1)	**148394**
Plug-Oil Gallery	(1)	**UKC3163**
Camshaft Cover	(1)	**TKC2199**

CYLINDER HEAD REBUILD KIT - RB7035

Description | Qty Req. | Part No.

CYLINDER HEAD Specification

Reconditioned Cylinder Heads
Reconditioned cylinder heads are supplied 'shimmed up' ready to fit, and include re-profiled cam, new valves & guides, valve springs & camshaft followers.

New Cylinder Heads
Same as for reconditioned heads, but with a brand new head shell.

All Heads are suitable for Unleaded Fuel.

Oil Filler Cap	(1)	**GFE6015**
Seal only - Oil Filler Cap	(1)	**RS1441**
Gasket-Camshaft Cover	(1)	**GEG447**
Nut-Special *(Camshaft cover)*	(4)	**147737**
'Cup' Washer	(4)	**147738**
Sealing Ring	(4)	**148090**
Screw	(2)	**SE504051**
Washer	(2)	**GHF331**
Head Stud	(5)	**149080**
Nut-Head Stud	(5)	**UKC9954**
Head Bolt (Long)	(3)	**UKC9871**
Head Bolt (Short)	(2)	**144762**
Washer *For 149080 stud & bolts UKC9871 & 144762.*	(10)	**UKC9786**

Cylinder Head Bolt/Stud Kit *Kit includes; 5 bolts, 5 studs, nuts & 10 washers.*	(1)	**RTC2375**
Plate	(2)	**ULC1814**
Air Manifold Pipe (EGR)	(1)	**TKC1228**

TOOLS & EQUIPMENT;

Head Stud Extraction Tool	(1)	**RB7213**
Valve Spring Compressor	(1)	**RX1226OHC**

Description	Qty Req.	Part No.	Description	Qty Req.	Part No.	Description	Qty Req.	Part No.

CYLINDER HEAD & FITTINGS

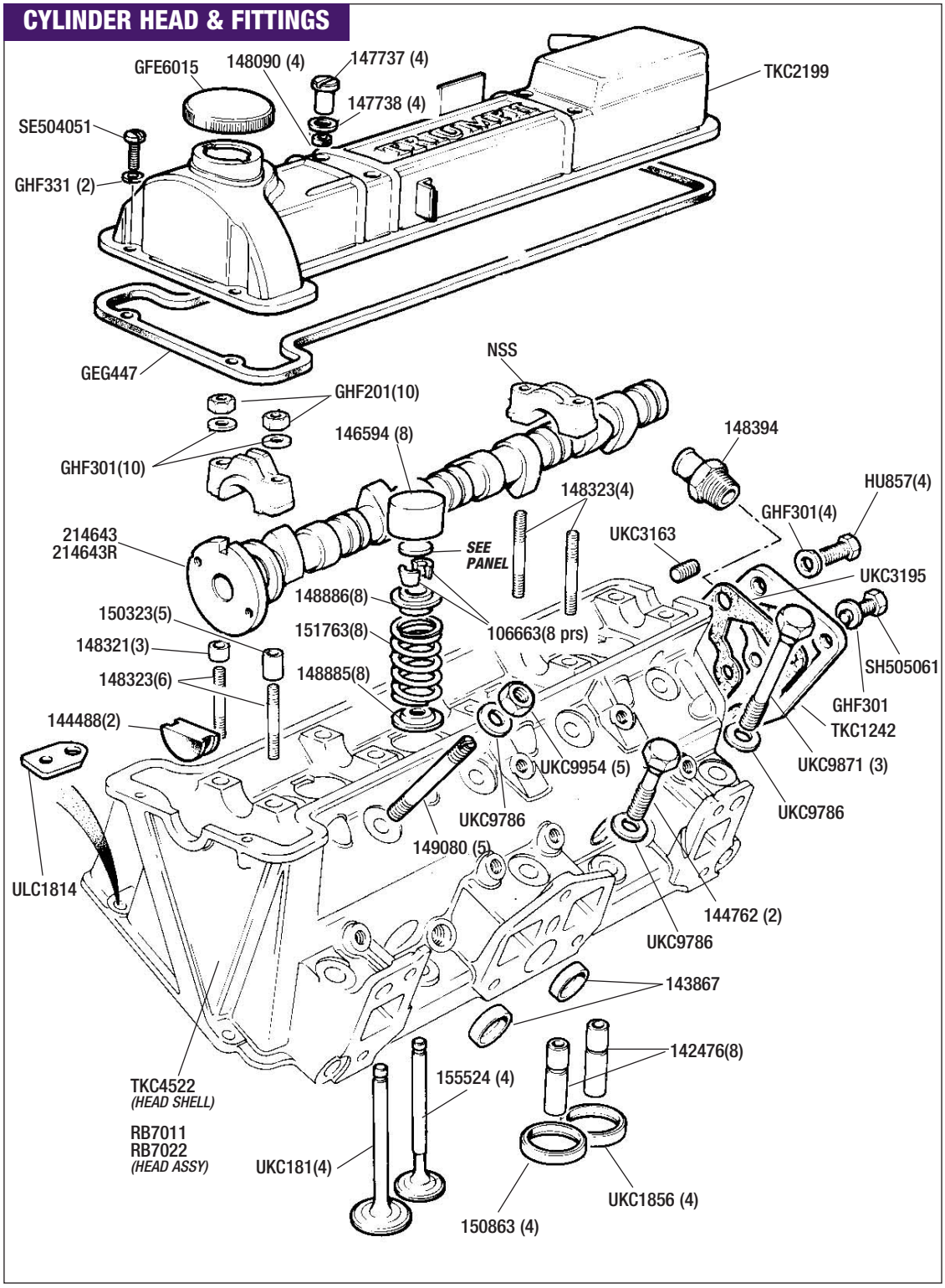

TAPPET ADJUSTING SHIMS

(Thickness in inches/thousandths shown in brackets)

148195	(0.090)
148196	(0.091)
148197	(0.092)
148198	(0.093)
148199	(0.094)
148200	(0.095)
148201	(0.096)
148202	(0.097)
148203	(0.098)
148204	(0.099)
148205	(0.100)
148206	(0.101)
148207	(0.102)
148208	(0.103)
148209	(0.104)
148210	(0.105)
148211	(0.106)
148212	(0.107)
148213	(0.108)
148214	(0.109)
148215	(0.110)
148216	(0.111)
148217	(0.112)
148218	(0.113)
148219	(0.114)
UKC1985	(0.115)
UKC1986	(0.116)
UKC1987	(0.117)
UKC1988	(0.118)
UKC1989	(0.119
UKC1990	(0.120)
UKC1991	(0.121)
UKC1992	(0.122)
UKC1993	(0.123)
UKC1994	(0.124)
UKC1995	(0.125)
UKC1996	(0.126)
UKC1997	(0.127)
UKC1998	(0.128)
UKC1999	(0.129)
UKC2000	(0.130)

SHIM SET RS2034
Comprises of an assortment of 10 shims

TECHNICAL JOTTINGS

UK & European Models

Compression Ratio too High?

If your cylinder head has been 'overskimmed' resulting in too high a compression ratio, or you just want to lower the compression (and help prolong engine life), then you may wish to consider rebuilding your engine using low compression pistons.
This can also be acheived by using a thick head gasket (+ 0.020"/0.55mm).

Oil Cooler Kit

Oil Cooler Kit *Includes radiator, hoses & fittings. Thermostat available separately.*	(1)	**RB7060**
Thermostat	(1)	**RS1456**

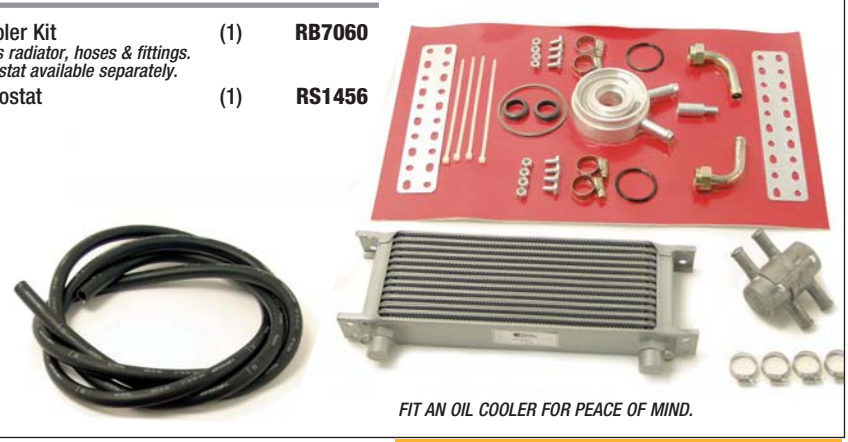

FIT AN OIL COOLER FOR PEACE OF MIND.

TO ORDER: 01522 568000
www.rimmerbros.co.uk

CLUTCH

Description	Qty Req.	Part No.

QUALITY CLUTCH COMPONENTS FOR YOUR TR7

Clutch Drive Components

Clutch Kit; *Kit includes cover, plate & release bearing.*		
4 Speed		
Original	(1)	**RB7038**
Aftermarket product	(1)	**RB7038P**
5 Speed		
Original	(1)	**RB7014**
Aftermarket	(1)	**RB7014P**
Clutch Alignment Tool		
4 Speed	(1)	**RX1385**
5 Speed	(1)	**RX1386B**
Clutch Cover:		
4 Speed		
Original	(1)	**GCC228**
Aftermarket	(1)	**GCC198P**
5 Speed		
Original	(1)	**GCC228**
Aftermarket	(1)	**GCC193P**
Bolt *(Clutch cover retaining)*	(6)	**GHF120**
Washer-Spring *(For GHF120)*	(6)	**GHF332**
Clutch Plate;		
4 Speed		
Original	(1)	**GCP229**
Aftermarket	(1)	**GCP253P**
5 Speed		
Original	(1)	**GCP253**
Aftermarket	(1)	**GCP253P**
Release Bearing *(All models)*	(1)	**GRB209**
Carrier/Sleeve** *Clutch release bearing carrier.*	(1)	**FRC5369A**
Clutch Operating Lever**	(1)	**LBU1234**
Slipper Pad *For operating lever LBU1234.*	(2)	**159003A**
Fulcrum Pin/Bolt	(1)	**UKC1774**

*****NOTE; on early vehicles LBU1234 and FRC5369 MUST be fitted as a pair.***
*See also **TRANSMISSION & AXLES** for further details of clutch release mechanism.*

Description	Qty Req.	Part No.

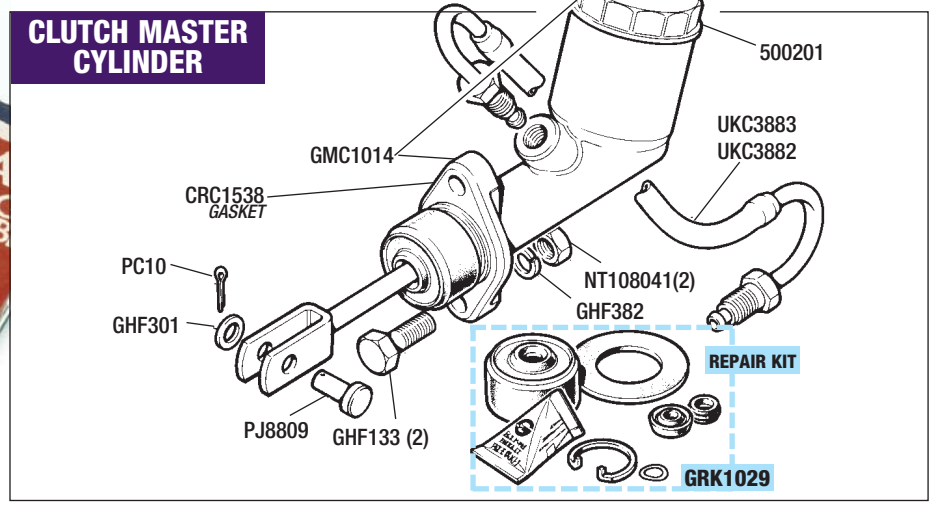

Clutch Master Cylinder

*See also; **TRANSMISSION & AXLES - Clutch Housing & Operation.***

Master Cylinder Assembly	(1)	**GMC1014**
Gasket - Cylinder to Bulkhead *Not shown.*	(1)	**CRC1538**
Repair Kit *(Master cylinder)*	(1)	**GRK1029**
Filler Cap	(1)	**500201A**
Pipe *(Master cyl to slave cyl);*		
Original Type		
RHD Vehicles	(1)	**UKC3883**
LHD Vehicles	(1)	**UKC3882**
Stainless Steel Braided Type		
RHD Vehicles	(1)	**UKC3883GR**
LHD Vehicles	(1)	**UKC3882GR**
Clevis Pin	(1)	**PJ8809**
Washer	(1)	**GHF301**
Split Pin	(1)	**PC10**
Setscrew *(M/cyl to bulkhead)*	(2)	**GHF133**
Washer-Spring	(2)	**GHF382**
Nut	(2)	**NT108041**

CYLINDERS, FLUIDS AND REPAIR KITS

Clutch/Brake Fluid

Clutch/Brake Fluids;		
Standard (Dot 3) *(1 Litre)*	(a/r)	**GBF103**
Silicone *(0.5 Litre)*	(a/r)	**RX1327**
Silicone *(1 Litre)*	(a/r)	**RX1326**

SILICONE CLUTCH/BRAKE FLUID

Unlike 'normal' clutch/brake fluids, Silcone fluid does not absorb moisture. This will avoid corrosion in the system (and under strenuous braking conditions tends not to Boil'). Also it won't harm paintwork if split.

***Note;** before filling with Silicone brake fluid, the entire hydraulic system should be flushed out.*

Description	Qty Req.	Part No.

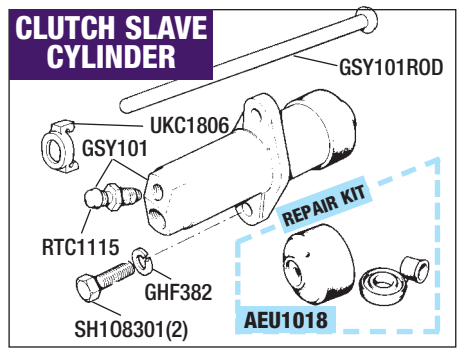

Clutch Slave Cylinder

Clutch Slave Cylinder	(1)	**GSY101**
Push Rod	(1)	**GSY101ROD**
Repair Kit *(Slave cylinder)*	(1)	**AEU1018**
Bleed Screw	(1)	**RTC1115A**
Bolt *(Slave cylinder mounting)*	(2)	**SH108301**
Washer-Spring	(2)	**GHF382**
Clip *(Push rod to clutch arm)*	(1)	**UKC1806**

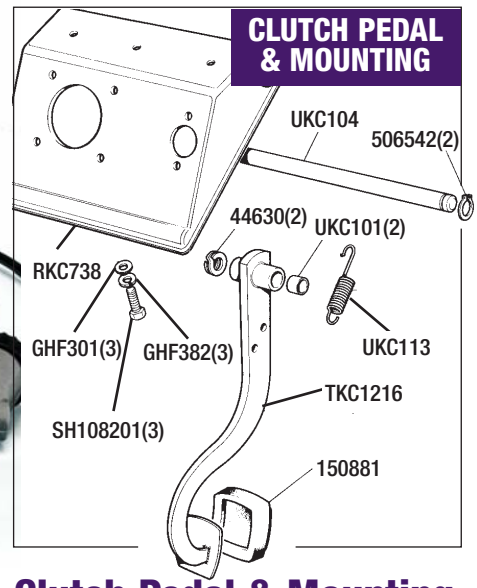

Clutch Pedal & Mounting

*See also; **TRANSMISSION & AXLES - Clutch Housing & Operation, and BRAKES.***

Housing-Clutch Pedal *(Rhd vehicles)*	(1)	**RKC738**
Setscrew	(3)	**SH108201**
Washer-Spring	(1)	**GHF382**
Washer-Flat	(1)	**GHF301**
Cross Shaft	(1)	**UKC104**
Circlip	(2)	**506542**
Clutch Pedal *(Rhd vehicles)*	(1)	**TKC1216**
Bush-Cross Shaft	(2)	**UKC101**
Locking Washer/Clip	(2)	**44630**
Return Spring-Pedal	(1)	**UKC113**
Pedal Pad/Rubber	(1)	**150881**

Description Qty Req. Part No. Description Qty Req. Part No. Description Qty Req. Part No.

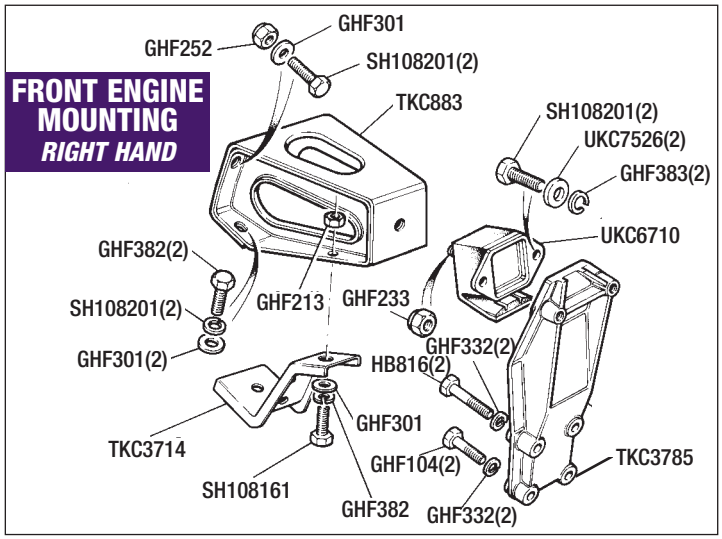

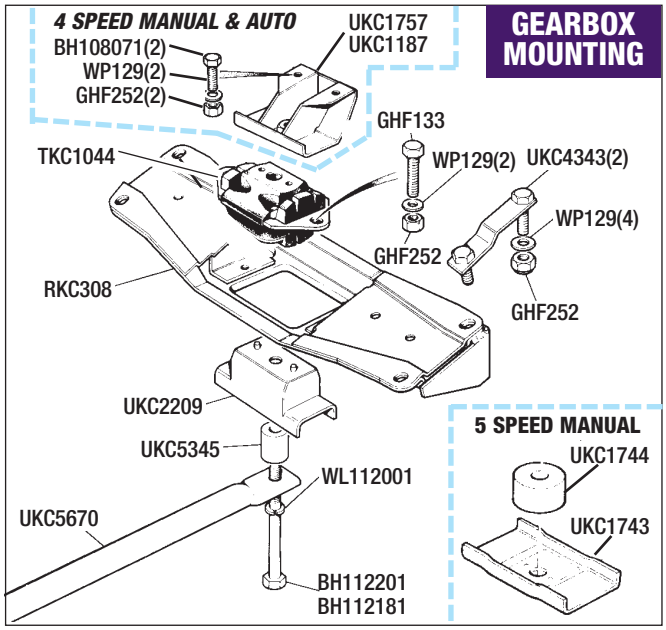

Engine Mounting

Front Right Hand *(All Models)*

Engine Mounting	(1)	**UKC6710**
Nut-Nyloc *(For UKC6710)*	(1)	**GHF233**
Mounting Bracket	(1)	**TKC883**
Setscrew	(2)	**SH108201**
Washer-Flat	(2)	**GHF301**
Nut-Locking	(2)	**GHF252**
Setscrew	(2)	**SH108201**
Washer-Spring	(2)	**GHF382**
Washer-Flat	(2)	**GHF301**
Support Strap	(1)	**TKC3714**
Setscrew	(1)	**SH108161**
Washer-Spring	(1)	**GHF382**
Washer-Flat	(1)	**GHF301**
Nut	(1)	**GHF213**
Support Bracket	(1)	**TKC3785**
Setcrew	(2)	**SH108201**
Washer/Spacer	(1)	**UKC7526**
Washer-Spring	(1)	**GHF382**
Bolt	(2)	**HB816**
Washer-Locking	(2)	**GHF332**
Bolt	(2)	**GHF104**
Washer-Locking	(2)	**GHF332**

Front Left Hand *(Late Models from 1977)*

Engine Mounting	(1)	**UKC6710**
Nut *(For UKC6710)*	(1)	**NZ110041**
Washer *(For UKC6710)*	(1)	**WM59**
Support Member/Bracket	(1)	**TKC2766**
Setscrew	(2)	**SH605041**
Bolt	(1)	**BH605111**
Bolt	(1)	**BH605101**
Setscrew	(1)	**SH108161**
Washer-Locking	(1)	**GHF382**

Front Left Hand *(Early Models to 1977)*

Fitted with early type subframe.

Engine Mounting	(1)	**UKC3325**
Washer-Nyloc	(1)	**GHF233**
Spacer	(1)	**UKC5954**
Support Member/Bracket	(1)	**TKC1436**
Setscrew	(3)	**SH605041**
Bolt	(1)	**BH605111**
Bolt	(1)	**BH605101**
Bracket-Engine Stay	(1)	**UKC3821**
Setscrew	(4)	**GHF120**
Washer-Spring	(4)	**GHF332**
Washer-Plain	(4)	**WP129**
Engine Stay	(1)	**UKC3789**
Nut-Nyloc	(1)	**GHF223**
Nut-Locking	(1)	**NT606041**
Nut	(1)	**GHF202**
Washer-Special	(1)	**WM810**
Spacer/Tube *(Upper)*	(1)	**UKC5978**
Spacer/Tube *(Lower)*	(1)	**UKC5977**
Mounting Rubber	(1)	**UKC4043**
Washer-Special	(1)	**WM810**
Nut-Nyloc	(1)	**GHF223**

FRONT ENGINE MOUNTING *LEFT HAND*

LATE VEHICLES FROM 1977

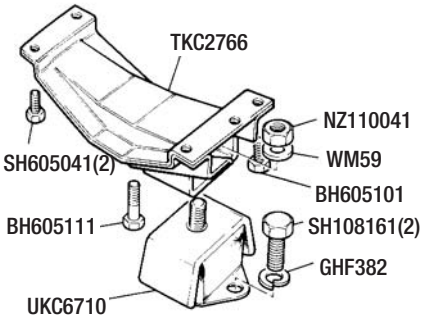

EARLY VEHICLES TO 1977

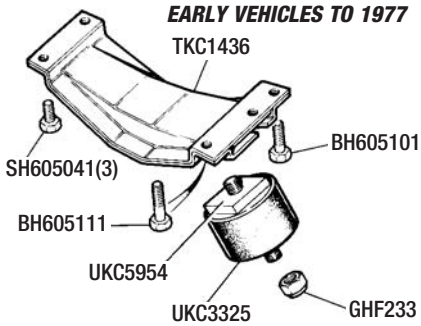

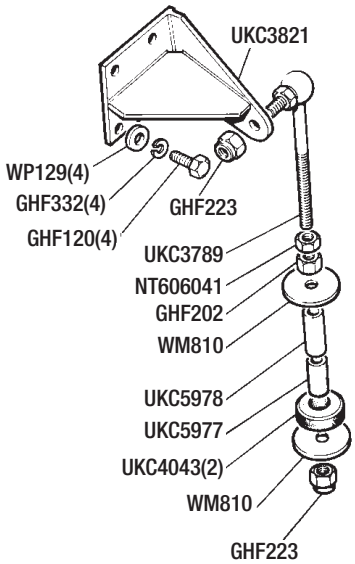

Gearbox Mounting

All Models

Gearbox Mounting	(1)	**TKC1044**
Crossmember	(1)	**RKC308**
Setscrew	(2)	**GHF133**
Washer-Flat	(2)	**WP129**
Nut-Locking	(2)	**GHF252**
Captive Plate Assembly	(2)	**UKC4343**
Washer	(2)	**WP129**
Nut-Locking	(2)	**GHF252**
Restrictor/Mounting Plate *(Lower)*	(1)	**UKC2209**
Tie Rod *(Engine to gearbox)*	(1)	**UKC5670**
Distance Piece/Spacer	(1)	**UKC5345**
Bolt *(Crossmber/gearbox mounting);*		
4 Speed & Automatic	(1)	**BH112201**
5 Speed	(1)	**BH112181**
Washer-Spring	(1)	**WL112001**

4 Speed & Automatic only

Restrictor/Mounting Plate *(Upper);*		
4 Speed	(1)	**UKC1187**
Automatic	(1)	**UKC1757**
Bolt	(2)	**BH108071**
Washer-Plain	(2)	**WP129**
Nut-Locking	(2)	**GHF252**

5 Speed only

Restrictor/Mounting Plate *(Upper)*	(1)	**UKC1743**
Spacer *(Mounting to gearbox)*	(1)	**UKC1744**
Bolt *(Crossmember/gearbox mounting)*	(NI)	**BH112181**
Washer-Spring	(NI)	**WL112001**

ALL MOUNTINGS & FITTINGS FROM STOCK

TO ORDER: 01522 568000
www.rimmerbros.co.uk

Water Pump & Fittings

See also; ***Radiator Hoses & Fittings*** *and* ***Thermostat & Transmitter.***

Description	Qty Req.	Part No.
Water Pump Assembly; *See TECHNICAL JOTTINGS.*		
6 Vane Pump *(to approx' 1978)*	(1)	GWP207
12 Vane Pump *(from approx' 1978)*	(1)	GWP206
Water Pump Repair Kit	(1)	RB7062
Includes items marked, these parts also available separately if required.*		
*Gasket (.010") *(Use as required)*	(1)	145017
*Gasket (.020") *(Use as required)*	(1)	149852
*Gasket (.030") *(Use as required)*	(1)	149853
*Bolt *(Left Hand thread)*	(1)	149095
*Washer	(1)	WP9
*Seal-Water	(1)	148322
Thrower	(1)	148462
*Seal-Oil	(1)	148501
*Circlip	(1)	148178
*Bearing	(1)	148172
Oil Thrower	(1)	147266
*'O' Ring	(1)	149760
Spindle	(1)	149482
Cage (Brass)	(1)	148454
*'O' Ring	(1)	148170
*'O' Ring	(1)	148169
Water Pump Removal Tool; *(See TECHNICAL JOTTINGS)*		
DIY Specification	(1)	RB7009
Professional Specification	(1)	RB7009P
Water Pump Cover; *(See TECHNICAL JOTTINGS)*		
6 Vane type	(1)	RKC395
12 Vane type	(1)	PKC437
Bush *(Water pump spindle to block)* *Always replace when renewing pump.*	(1)	145022
Link Tube/Pipe	(1)	UKC2538
'O' Ring	(2)	TRS1114
Adaptor-Hose	(1)	UKC1802
Setscrew	(3)	GHF120
Washer-Flat	(3)	GHF301
Stud	(3)	TE605111
Nut	(3)	GHF201

STANDARD COOLING FAN, VISCOUS COUPLING & IDLER PULLEY.

TECHNICAL JOTTINGS

Water Pump Identification

If unsure as to the type of pump fitted to your vehicle, the pump cover will have to be removed to check the number of vanes on the impeller (note: pumps & covers cannot be interchanged between 6 & 12 vane types, a 12 vane pump must be fitted with a 12 vane cover).

A water pump extraction tool (part No RB7009 or RB7009PRO), is usually required to extract the pump from the cylinder block (or improvise). If the pump is difficult to remove, it may leave the brass cage in the cylinder block, this may be prised out carefully. The pump spindle bush (part No 145022), located in the cylinder block, should be replaced as a matter of course.

COOLING FAN/PULLEY & FITTINGS

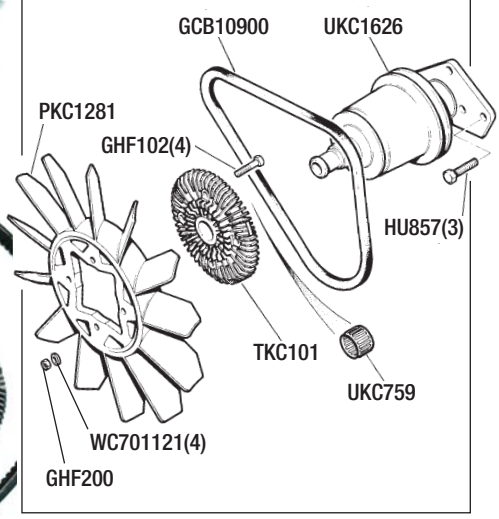

Cooling Fan/Pulley & Fittings

See also; ***Radiator Hoses & Fittings*** *and* ***Thermostat & Transmitter.***

Description	Qty Req.	Part No.
Cooling Fan *(Standard fitting)*	(1)	PKC1281
Viscous Coupling	(1)	TKC101
Tolerance Ring	(1)	UKC759
Bolt *(Coupling to fan)*	(4)	GHF102
Washer *(For GHF102)*	(4)	WC701121
Nut *(For GHF102)*	(4)	GHF200
Kenlowe Electric Fan Kit *Not suitable for air con vehicles. 13" fan.*	(1)	RB7065
Sensor only *(For Kenlowe fan)*	(1)	KLM1416
Fan Belt - Standard	(1)	GCB10900
Fan Belt *(If pulley removed)* *When Kenlowe Fan fitted.*	(1)	GCB10788
Front Pulley/Bearing Assembly	(1)	UKC1626
Bearing only *(Front pulley)*	(1)	RB7023
Setscrew	(3)	HU857

KENLOWE ELECTRIC FAN KIT - RB7065

WATER PUMP & FITTINGS

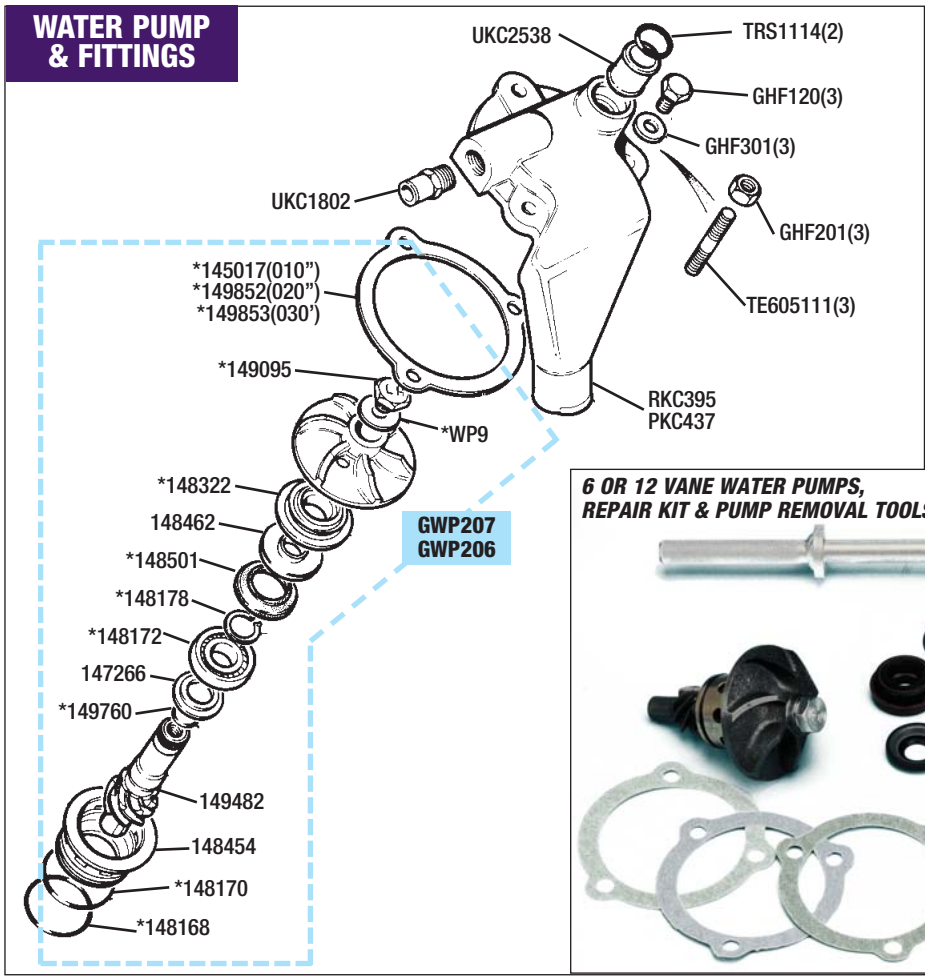

6 OR 12 VANE WATER PUMPS, REPAIR KIT & PUMP REMOVAL TOOLS.

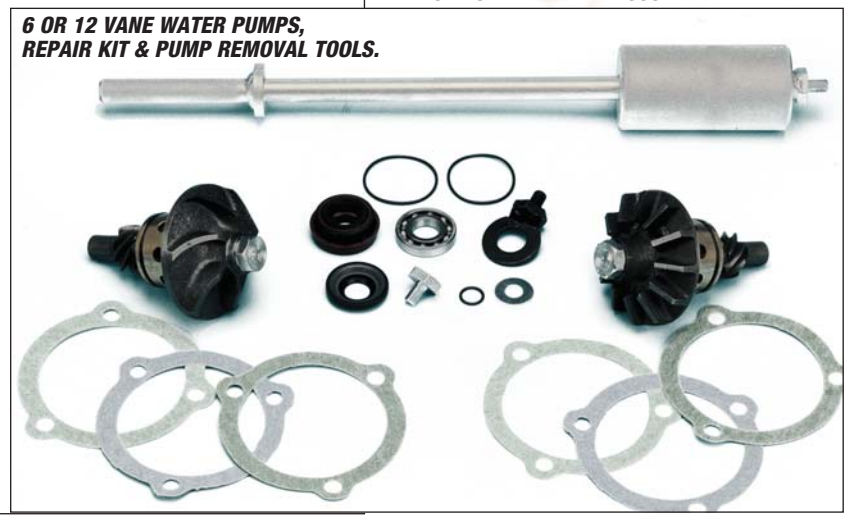

Description | Qty Req. | Part No.

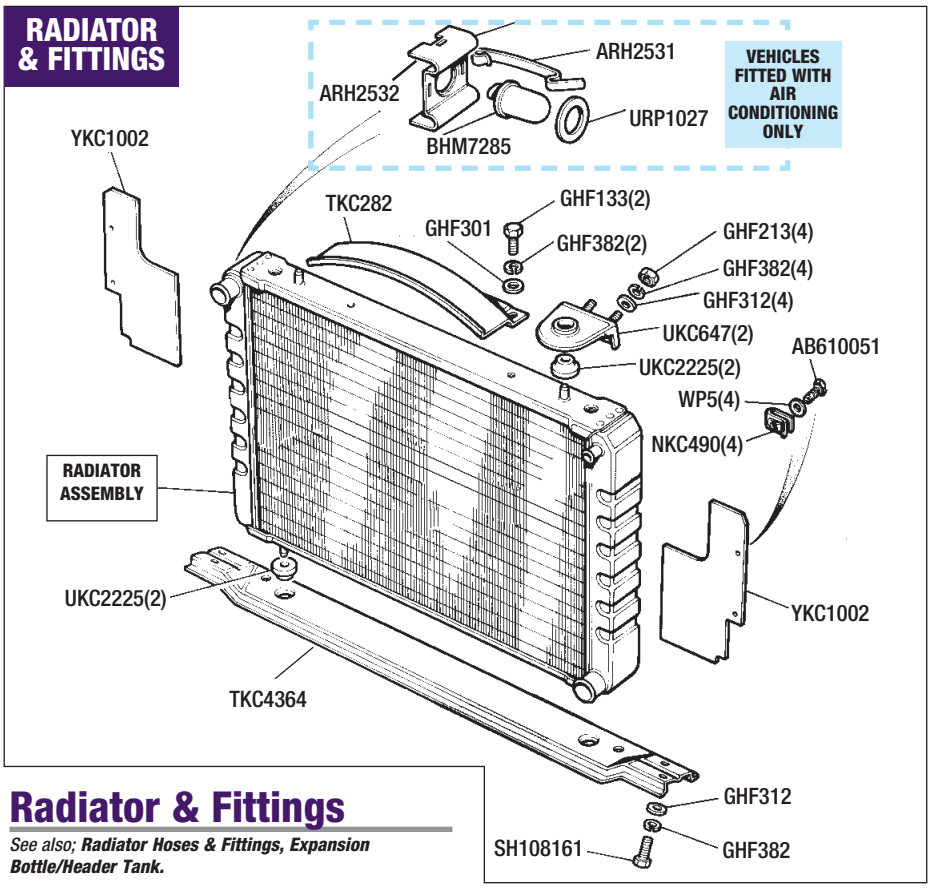

Radiator & Fittings

See also; ***Radiator Hoses & Fittings, Expansion Bottle/Header Tank.***

RADIATOR ASSEMBLY

New radiators are 100% BRAND NEW.
Reconditioned radiators are fitted with a Brand New core.

Radiator (ACG/TCG Vehicles);
Vehicles 1975 to 1979
All ACG/TCG commission numbers fitted with either Plastic Expansion Bottle, or Steel (Rh mounting) Header Tank.

Standard-New (3 row core)	(1)	**RKC137**
Standard-Recon (3 row core)	(1)	**RKC137R**
Uprated-New (4 row core)	(1)	**RKC137UR**
Uprated-Recon (4 row core)	(1)	**RKC137RUR**

Radiator (VIN Vehicles);
Vehicles 1979 onwards
All vehicles from VIN 200001 fitted with Steel (Lh mounting) Header Tank.

Standard-New (3 row core)	(1)	**PKC1359**
Standard-Recon (3 row core)	(1)	**PKC1359R**
Uprated-New (4 row core)	(1)	**PKC1359UR**
Uprated-Recon (4 row core)	(1)	**RKC1359RUR**
Kenlowe Electric Fan Kit *Not suitable for air-con vehicles.*	(1)	**RB7065**
Anti-freeze (Unipart) *(1 Litre)*	(a/r)	**GAC2018**
Anti-freeze (Unipart) *(5 Litre)*	(a/r)	**GAC2019**
Holts Radweld *(250ml*	(a/r)	**RX1508**

RADIATOR FITTINGS

Blanking Board	(2)	**YKC1002**
Spire Clip	(4)	**NKC490**
Washer	(4)	**WP5**
Screw	(4)	**AB610051**
Fan Guard	(1)	**TKC282**
Setscrew *(For TKC282)*	(2)	**GHF133**
Washer-Spring	(2)	**GHF382**
Washer-Flat	(2)	**GHF301**
Bracket *(Radiator top mounting)*	(2)	**UKC647**
Mounting Rubber	(2)	**UKC2225**
Nut	(4)	**GHF213**
Washer-Spring	(4)	**GHF382**
Washer-Flat	(4)	**GHF312**
Support Panel-Radiator *(Lower)*	(1)	**TKC4364**
Setscrew	(4)	**SH108161**
Washer-Spring	(4)	**GHF382**
Washer-Flat	(4)	**GHF312**
Mounting Rubber	(2)	**UKC2225**

Vehicles with Air Conditioning

Thermostatic Switch	(1)	**BHM7285**
Seal-Thermostatic Switch	(1)	**URP1027**
Retaining Plate	(1)	**ARH2532**
Retaining Clip	(1)	**ARH2531**

Description | Qty Req. | Part No.

Thermostat & Transmitter

See also; ***Radiator Hoses & Fittings, Expansion Bottle/Header Tank*** *and* ***Heater Hoses.***

Thermostat Housing;		
Vehicles 1975 to 1978 *All ACG commission numbers fitted with Plastic expansion bottle.*	(1)	**UKC6916**
Vehicles 1978 to 1979 *All TCG commission numbers fitted with Steel (Rh mounting) Header Tank.*	(1)	**ULC2000**
Vehicles 1979 & Future *All vehicles from VIN 200001 fitted with Steel (Lh mounting) Header Tank.*	(1)	**ULC2111**
Setscrew *(Thermostat housing to manifold);*		
Vehicles 1975-1978 *All ACG commission numbers.*	(2)	**GHF163**
Vehicles 1978 on *(Rh-Short)*	(1)	**GHF163**
Vehicles 1978 on *(Lh-long)* *All TCG/VIN commission numbers.*	(1)	**GHF164**
Washer-Spring	(2)	**GHF332**
Filler Plug;		
Brass type	(1)	**ARA2634B**
Plastic type	(1)	**ARA2634P**
Sealing Ring	(1)	**607025A**
Thermostat;		
Winter (88°)	(1)	**GTS108**
Summer (82°)	(1)	**GTS101**
Gasket	(1)	**GTG103**
Temperature Transmitter	(1)	**GTR108**
Water Transfer Jacket	(1)	**TKC1242**
Gasket *(For TKC1242)*	(1)	**UKC3195**
Setscrew	(4)	**HU857**
Setscrew	(1)	**SH505061**
Washer-Plain	(5)	**GHF301**
Hose Adaptor *(Transfer jacket to heater)*	(1)	**148394**

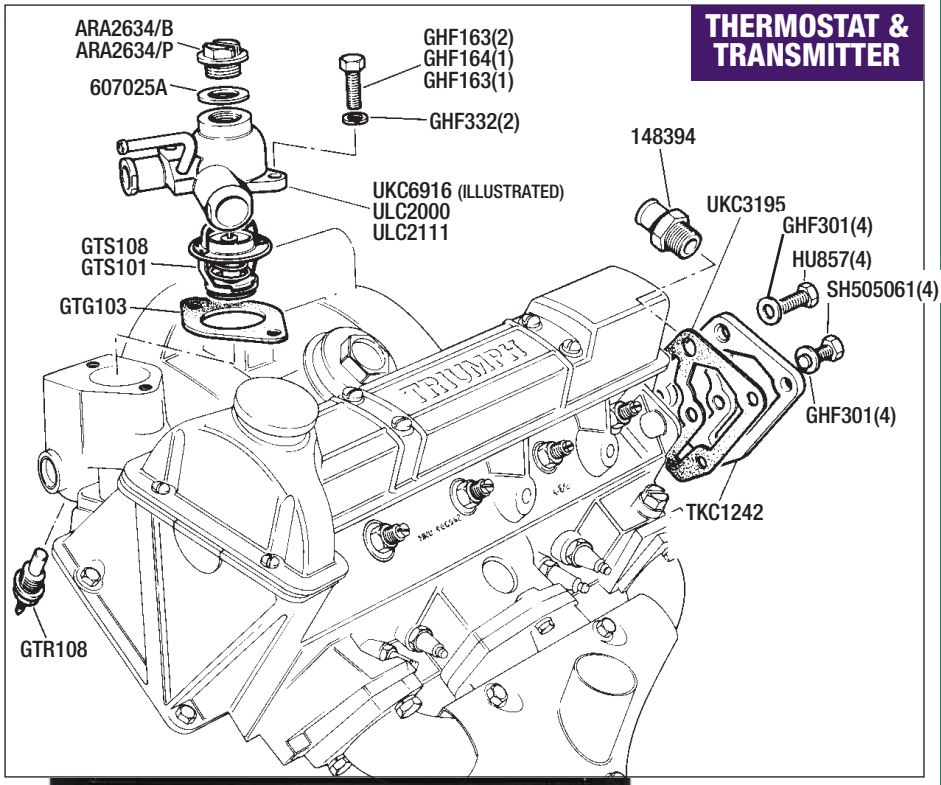

UNIPART ANTI-FREEZE, DESIGNED TO PROTECT YOUR COOLING SYSTEM

TO ORDER: 01522 568000
www.rimmerbros.co.uk

Description	Qty Req.	Part No.	Description	Qty Req.	Part No.	Description	Qty Req.	Part No.

RADIATOR HOSES

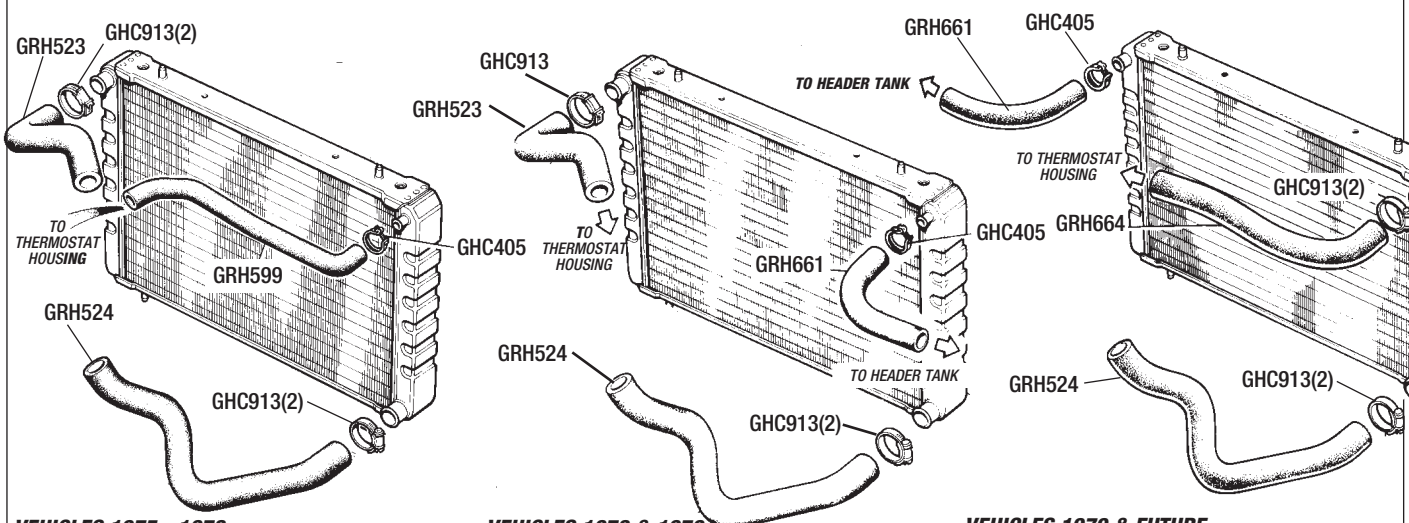

Radiator Hoses & Fittings

See also; ***Heater Hoses.***

Vehicles 1975-1978

All ACG commission numbers fitted with Plastic expansion bottle.

HOSE KIT *Includes all radiator/heater hoses and clips.*	(1)	**RB7072**
Top Hose (Rh) *Radiator to thermostat housing.*	(1)	**GRH599**
Top Hose (Lh) *Radiator to thermostat housing.*	(1)	**GRH523**
Bottom Hose	(1)	**GRH524**
Hose Clips;		
For Hoses GRH523 & GRH524	(4)	**GHC913**
For Hose GRH599	(2)	**GHC405**
Anti-freeze (Unipart) *(1 Litre)*	(a/r)	**GAC2018**
Anti-freeze (Unipart) *(5 Litre)*	(a/r)	**GAC2019**

Vehicles 1978 to 1979

All TCG commission numbers fitted with Steel (Rh mounting) Header Tank.

HOSE KIT *Includes all radiator/heater hoses and clips.*	(1)	**RB7043**
Top Hose (Rh) *Radiator to steel header tank.*	(1)	**GRH661**
Top Hose (Lh) *Radiator to thermostat housing.*	(1)	**GRH523**
Bottom Hose	(1)	**GRH524**
Hose Clips;		
For Hoses GRH523 & GRH524	(4)	**GHC913**
For Hose GRH661	(2)	**GHC405**
Anti-freeze (Unipart) *(1 Litre)*	(a/r)	**GAC2018**
Anti-freeze (Unipart) *(5 Litre)*	(a/r)	**GAC2019**

Vehicles 1979 on & Future

All vehicles from VIN 200001 fitted with Steel (Lh mounting) Header Tank.

HOSE KIT *Includes all radiator/heater hoses and clips.*	(1)	**RB7004**
Top Hose (Rh) *Radiator to thermostat housing.*	(1)	**GRH664**
Top Hose (Lh) *Radiator to steel header tank.*	(1)	**GRH661**
Bottom Hose	(1)	**GRH524**
Hose Clips;		
For Hoses GRH664 & GRH524	(4)	**GHC913**
For Hose GRH661	(2)	**GHC405**
Anti-freeze (Unipart) *(1 Litre)*	(a/r)	**GAC2018**
Anti-freeze (Unipart) *(5 Litre)*	(a/r)	**GAC2019**

HEATER HOSES *(ALL)*

See also; ***Heater Assembly & Fittings*** *and* ***Heater Hoses.***

Hose (Feed) *(Cyl head to heater)*	(1)	**UKC6775**
Hose (Return) *(Heater to steel pipe)*	(1)	**UKC3895**
Hose Clips *(For UKC6775 & UKC3895)*	(4)	**GHC608**
Hose (Return) *(Steel pipe to water pump)*	(1)	**UKC4457**
Hose Clips *(For UKC4457)*	(2)	**GHC811**
Steel Water Pipe *Heater to water pump/inlet manifold.*	(1)	**TKC1241**

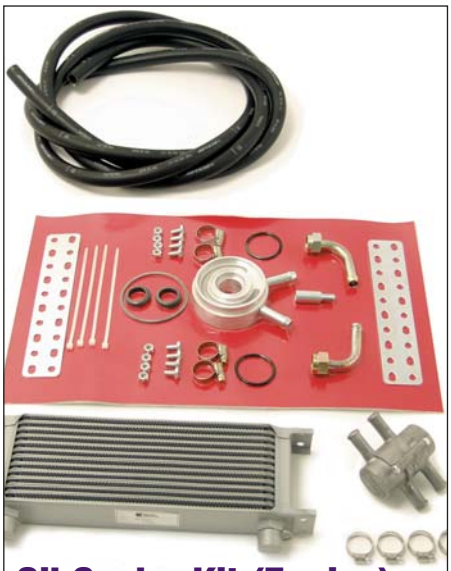

Oil Cooler Kit (Engine)

Oil Cooler Kit *Kit includes radiator, hoses & fittings. Thermostat supplied separately.*	(1)	**RB7060**
Thermostat	(1)	**RS1456**

Radiator Relief

Radiator relief allows your radiator to transfer heat more efficiently, reducing your engines operating temperature (which is obviously controlled by the thermostat) by up to 30°F. You therefore have 'a little bit in hand' for those hot days stuck in traffic. This proven coolant additive will also cut engine warm-up time in half which will reduce engine wear which is most extreme when the engine is cold. Fully compatible with water and anti-freeze and is safe with cast iron and all alloys.

RADIATOR RELIEF (946ml) *Treats 1 engine.*	**RX1461**

HOSE KITS FOR ALL MODELS (RB7004 SHOWN)

Description | Qty Req. | Part No. | Description | Qty Req. | Part No. | Description | Qty Req. | Part No.

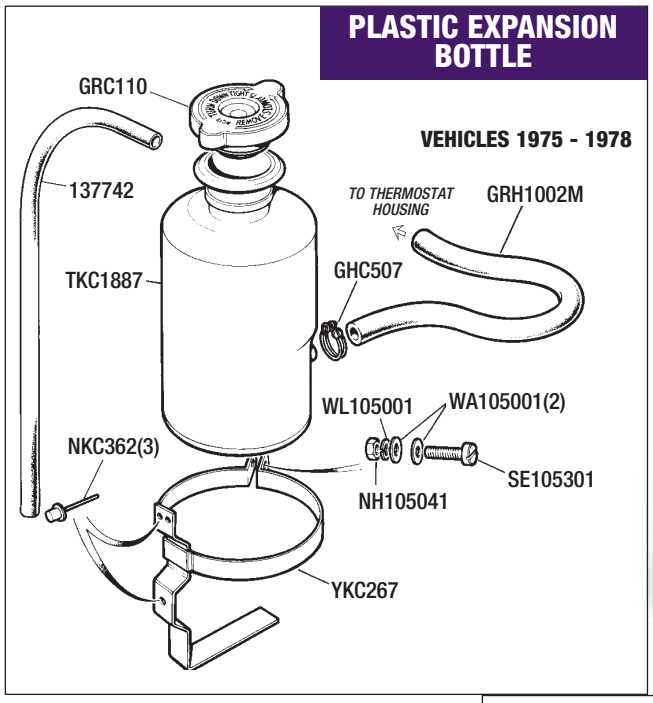

Expansion Bottle & Header Tank

Vehicles 1975-1978

All ACG commission numbers fitted with Plastic Expansion Bottle.

Expansion Bottle	(1)	**TKC1887**
Pressure Cap	(1)	**GRC110**
Bracket	(1)	**YKC267**
Setscrew	(1)	**SE105301**
Washer-Flat	(2)	**WA105001**
Washer-Spring	(1)	**WL105001**
Nut	(1)	**NH105041**
Rivet *(Bracket to body)*	(3)	**NKC362**
Hose *(Vents to atmosphere)*	(1)	**137742**
Hose *(To thermostat housing)*	(1)	**GRH1002M**
Hose Clip	(2)	**GHC507**

Vehicles 1978 onwards

All TCG & VIN commission numbers fitted with Steel (Rh or Lh mounting) Header Tank.

Header Tank;		
Right Hand mounting *All TCG commission numbers to 1979.*	(1)	**RKC4461**
Left Hand mounting *All vehicles from VIN 200001 (1979 on).*	(1)	**RKC4509**
Pressure Cap	(1)	**GRC110**
Probe/Sender Unit* *Low coolant warning light.*	(1)	**C43222A**
Rubber Bush* *(For C43222)*	(1)	**C43221A**
Lead Assembly* **For Lh mounting header tank only.*	(1)	**ULC2353**
Control Unit *('Low coolant level')*	(1)	**RKC5259**
Hose-Tank to Radiator *For both Rh & Lh mounting header tank.*	(1)	**GRH661**
Hose Clips *(For GRH661)*	(2)	**GHC405**
Hose *(Header tank to thermostat housing)*	(1)	**ULC2641**
Hose Clips *(For ULC2641)*	(2)	**GHC507**
Plastic Hose Tie	(1)	**BMK1900**
Overflow Hose *(Vents to atmosphere)*	(1)	**ULC2122**
Upper Tank Strap	(1)	**11H1196**
Seating Pad *(For 11H1196)*	(1)	**11H1197**
Setscrew *(Top to lower bracket)*	(2)	**SH106141**
Washer-Spring *(For SH106141)*	(2)	**WL106001**
Nut *(For SH106141)*	(2)	**GHF212**
Lower Tank Mounting Bracket;		
Right Hand mounting *(For RKC446)*	(1)	**TKC5592**
Left Hand mounting *(For RKC4509)*	(1)	**TKC5604**
Setscrew *(Bracket to body)*	(3)	**SH108141**
Washer-Spring *(For SH108141)*	(3)	**GHF382**
Nut *(For SH108141)*	(3)	**GHF213**

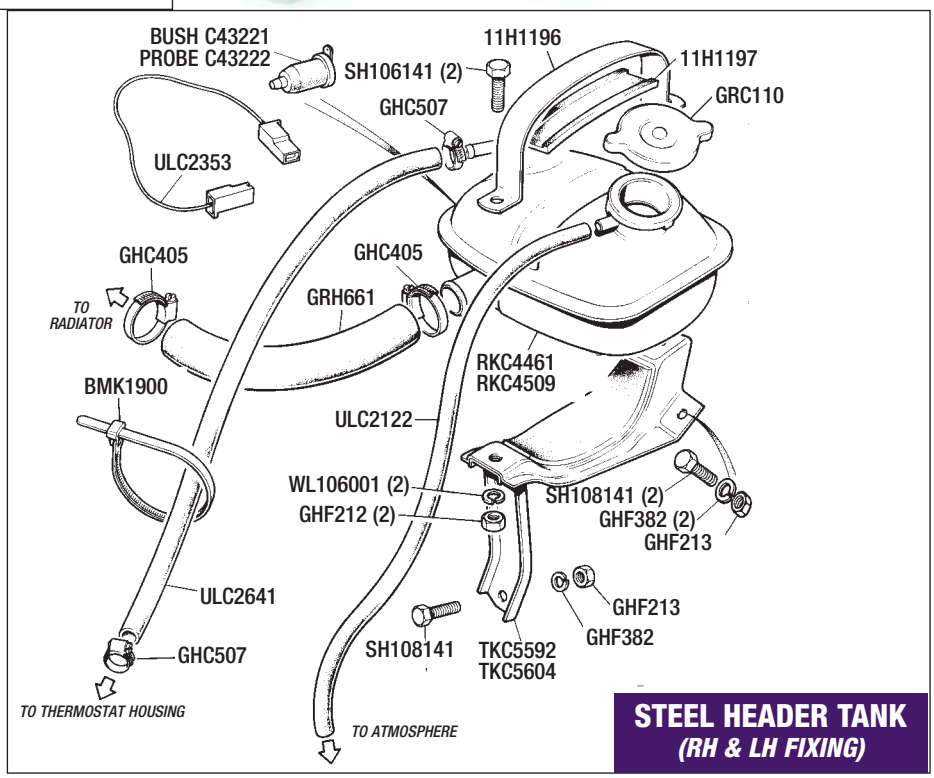

TO ORDER: 01522 568000
www.rimmerbros.co.uk

Heater Assembly

Description	Qty Req.	Part No.
Heater Assembly	(1)	AAP273
Support Shelf-Heater Unit	(1)	XKC280
Heater Motor Unit only	(1)	DZB3159
Heater Matrix	(1)	DZB3226
Heater Matrix Pipes *(Inlet/outlet)* *Matrix to bulkhead.*	(1)	AAP273Pipes
Sealing Washer *Heater matrix to inlet/outlet pipes.*	(2)	DZB3255
Heater/Air Vent Knobs;		
Vent *(Fresh air)*	(1)	ZKC1222
Heat Control	(1)	ZKC1220
Fan Speed Control	(1)	ZKC4011
Direction Control *(Screen/car)*	(1)	ZKC1219
Wiring Harness & Resistor;		
Vehicles to ACG25001	(1)	AAP223
Vehicles from ACG25001	(1)	AAP281
Demister Tube	(2)	715036

Heater Hoses

See also; ***Radiator Hoses & Fittings, Hose Clips and FUEL SYSTEM - Inlet Manifold.***

Description	Qty Req.	Part No.
Hose (Feed) *(Cyl head to heater)*	(1)	UKC6775
Hose (Return) *(Heater to steel pipe)*	(1)	UKC3895
Hose Clips *(For UKC6775 & UKC3895)*	(4)	GHC608
Hose (Return) *(Steel pipe to water pump)*	(1)	UKC4457
Hose Clips *(For UKC4457)*	(2)	GHC811
Steel Water Pipe *Heater to water pump/inlet manifold.*	(1)	TKC1241
Union Nut	(4)	153199
Olive	(1)	TL11
Connector	(1)	153198
Hose Kits; *Kits Inc all radiator/heater hoses and clips.*		
Vehicles 1975-1978 *All ACG commission numbers fitted with Plastic Expansion Bottle.*	(1)	RB7072
Vehicles to 1978-1979 *All TCG commission numbers fitted with Steel (Rh mounting) Header Tank.*	(1)	RB7043
Vehicles 1979 onwards *All vehicles from VIN 200001 fitted with Steel (Lh mounting) Header Tank.*	(1)	RB7004
Anti-freeze (Unipart) *(1 Litre)*	(a/r)	GAC2018
Anti-freeze (Unipart) *(5 Litre)*	(a/r)	GAC2019

HOSE CLIPS

3/8" to 1/2"	(a/r)	GHC304
7/16" to 5/8"	(a/r)	GHC405
1/2" to 3/4"	(a/r)	GHC406
5/8" to 7/8"	(a/r)	GHC507
3/4" to 1"	(a/r)	GHC608
7/8" to 1 1/8"	(a/r)	GHC709
1" to 1 3/8"	(a/r)	GHC811
1 1/8" to 1 5/8"	(a/r)	GHC913
1 3/8" to 2"	(a/r)	GHC1015
1 1/2" to 2 1/8"	(a/r)	GHC1217
2" to 2 3/4"	(a/r)	GHC1622

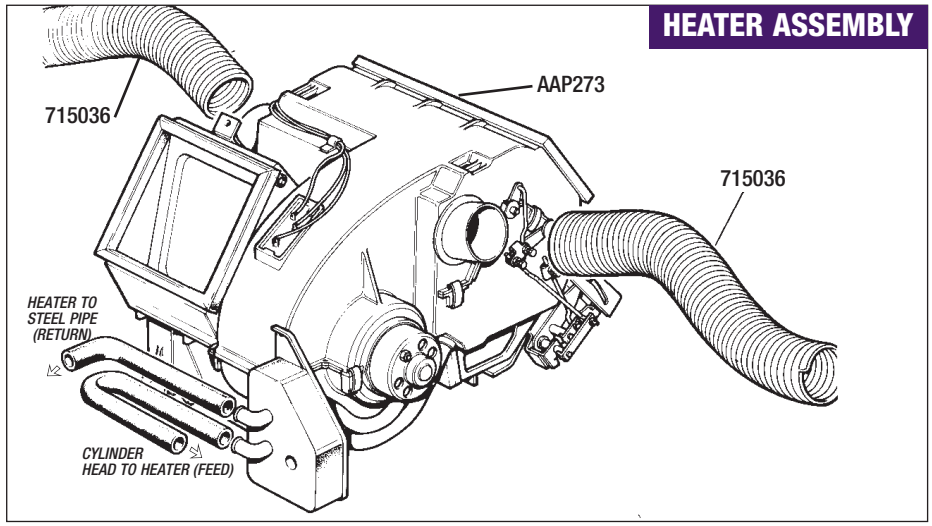

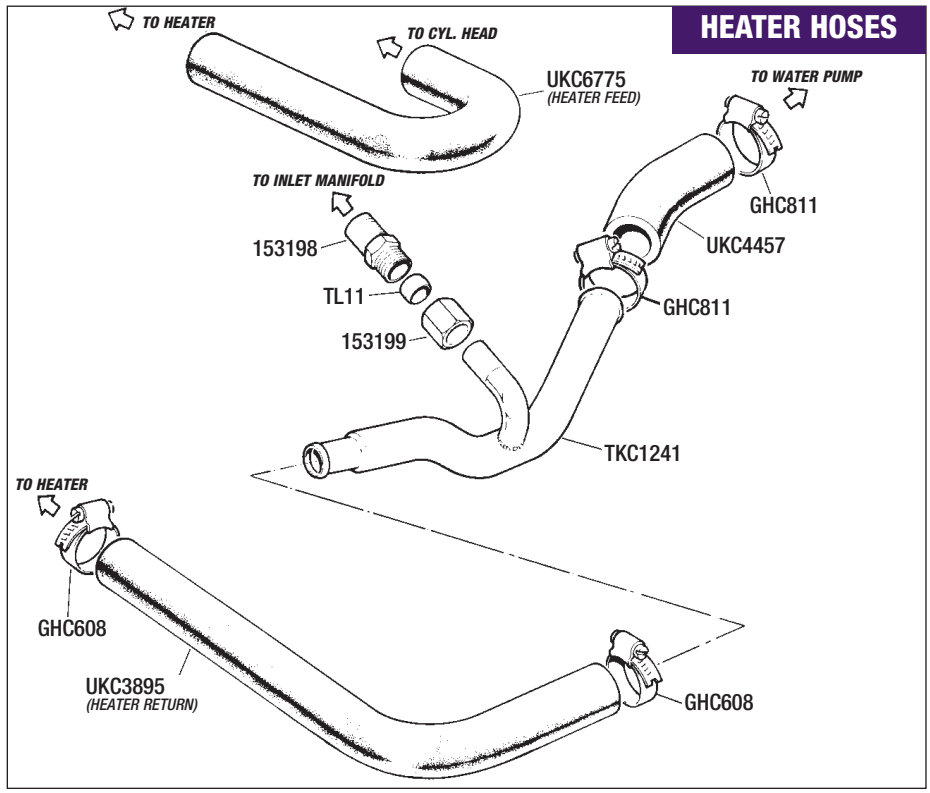

Air Conditioning

Not Illustrated.

Description	Qty Req.	Part No.
Air Conditioning unit- Complete Assembly *(Under dash)*	(1)	AAP274
Motor Unit only	(1)	AAU2023
Control unit	(1)	TKC2977
Pipe/Hose Assembly's;		
Evaporator to Dryer	(1)	TKC1598
Radiator to Receiver/Dryer	(1)	TKC3493
Wiring Harness & Resistor	(1)	AAP224
Drive Belt *(Air compressor)*	(1)	GFB10635

Kenlowe Engine HotStart & Interior Pre-Heater System

The Ulitimate in Comfort & Convenience.
"Year round comfort, safety, economy - even on the coldest morning."

Description	Qty Req.	Part No.
Kenlowe 'HotStart' Engine & Interior Pre-Heater	(1)	RX1361

This is a mains powered pre-heater and coolant pump. Fitted in a convenient position in the engine bay. Hotstart rapidly heats the engine to operating temperature and holds it there, eliminating the engine wear, extra fuel costs and de-icing associated with cold mornings. The cars's interior is also pre-heated before you even turn on the ignition, making the start of your journey even more comfortable.

Inlet Manifold & Fittings

*See also; **COOLING & HEATING - Thermostat & Transmitter** and **Heater Hoses.***

Description	Qty Req.	Part No.
Inlet Manifold (Bare)	(1)	**UKC1636**
Gasket *(Manifold to head)*	(1)	**AJM679**
Setscrew *(Manifold to head)*	(6)	**GHF163**
Washer-Plain	(6)	**GHF301**
Lifting Eye *(Engine rear)*	(1)	**153768**
'O' Ring	(1)	**TRS2024**
Core Plug	(1)	**138380**
Temperature Transmitter	(1)	**GTR108**
Blanking Plug	(1)	**122132**
Fibre Washer	(1)	**WF513**
Water Pipe* *(Heater return)*	(1)	**TKC1241**
Sleeve Nut*	(1)	**153199**
Olive*	(1)	**TL11**
Connector*	(1)	**153198**
See **COOLING & HEATING-Section 'Heater Hoses' for illustration.*		
Bracket *(Throttle spring)*	(1)	**UKC6168**
Blanking Plate	(1)	**UKC707**
Gasket-Blanking Plate	(1)	**ULC1960**
Setscrew	(2)	**SH505051**
Non-Return Valve *(Brake servo)*	(1)	**ADU1402**

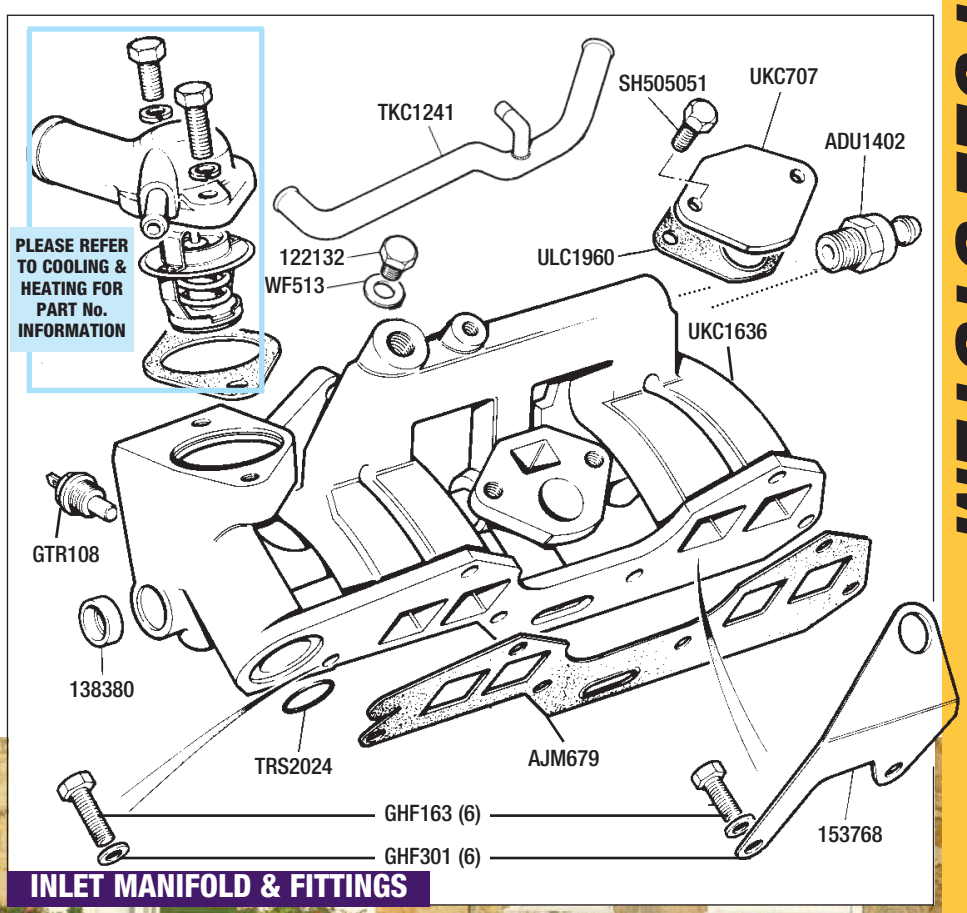

INLET MANIFOLD & FITTINGS

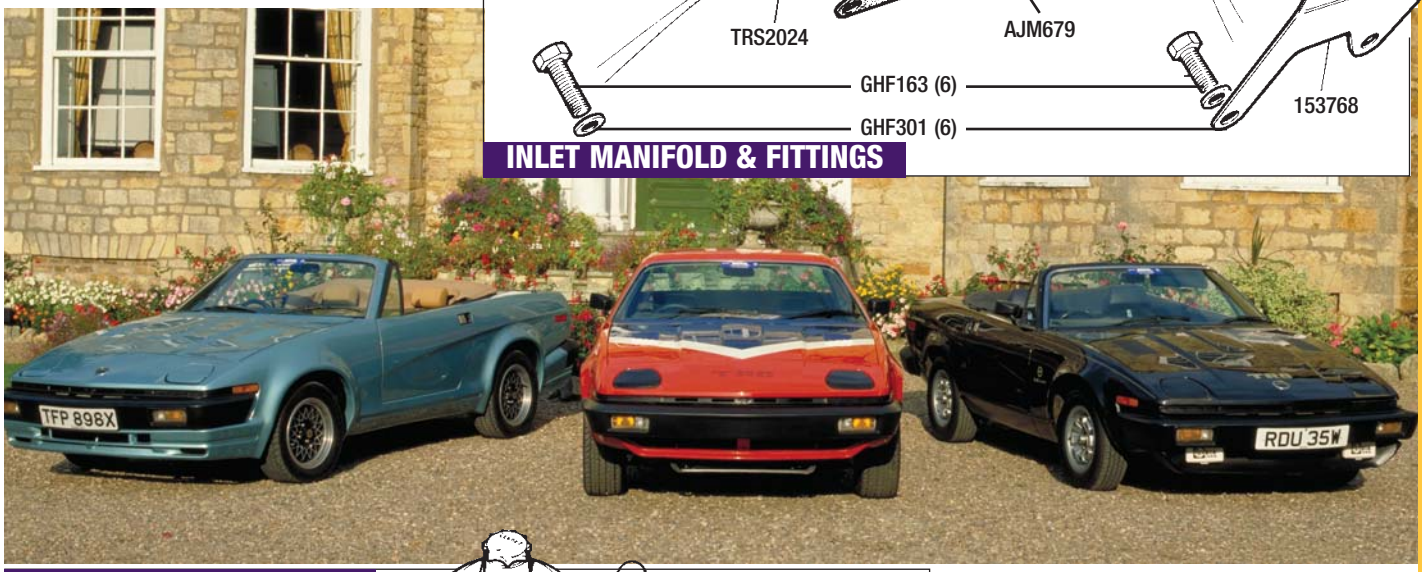

CARBURETTOR MOUNTINGS

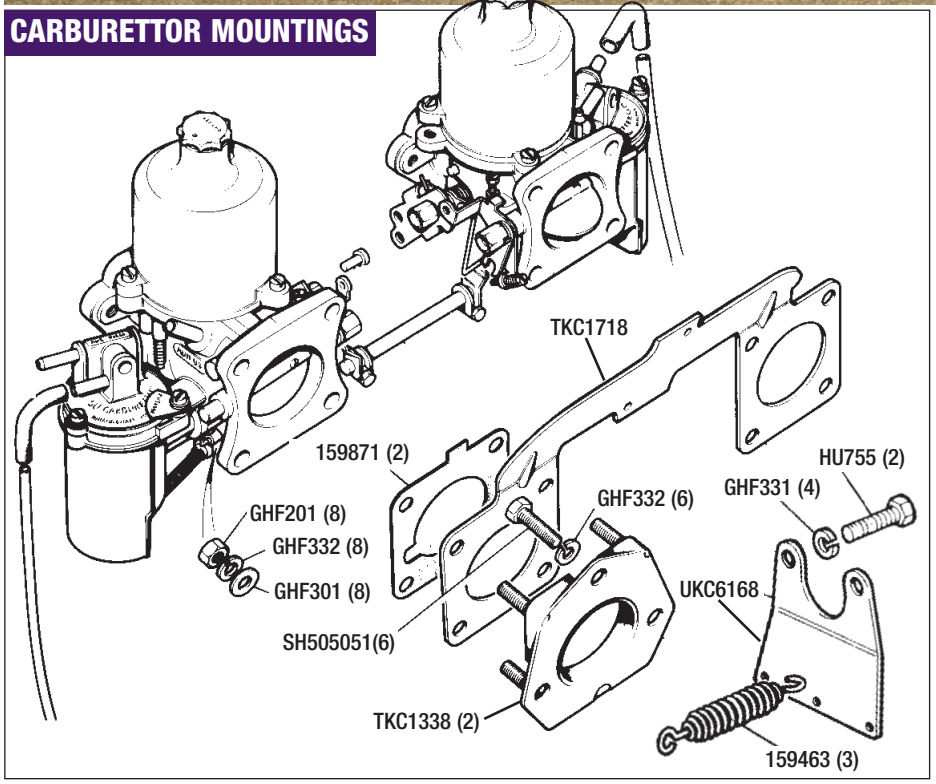

Carburettor Mountings

Description	Qty Req.	Part No.
Flexible Mounting	(2)	**TKC1338**
Setscrew *(Mounting to inlet manifold)*	(6)	**SH505051**
Washer-Spring	(6)	**GHF332**
Link Plate	(1)	**TKC1718**
Gasket *(Carburettor to link plate)*	(2)	**159871**
Nut *(Mounting to carburettor)*	(8)	**GHF201**
Washer-Spring	(8)	**GHF332**
Washer-Flat	(8)	**GHF301**
Bracket *(Locates on manifold)* *For throttle return springs.*	(1)	**UKC6168**
Throttle Return Spring	(3)	**159463**
Setscrew	(2)	**HU755**
Washer-Spring	(4)	**GHF331**

TO ORDER: 01522 568000
www.rimmerbros.co.uk

Description	Qty Req.	Part No.	Description	Qty Req.	Part No.	Description	Qty Req.	Part No.

TECHNICAL JOTTINGS

SU's or Strombergs fitted

SU HS6 carburettors were fitted to UK and European specification vehicles only. For the USA, Canada, Australia and Japanese markets, Stromberg CD150s were fitted (either single or as twin). Fuel Injection was also offered on vehicles for these countries. Our catalogue does not cover these areas, however, if you have any specific requirements please contact our sales office, where we can consult factory parts listings and advise you accordingly.

TECHNICAL JOTTINGS

SU HS6 Carburettor Overhaul & Identification

It is quite straightforward (with the help of a workshop manual) to service and overhaul your carburettor(s) using the service items listed in this section. With the tightening of the MOT regulations regarding 'Exhaust Emissions', it is important that they are maintained in good order. We can recondition your own SU carburettors, or we can supply reconditioned units - on a strict exchange basis. The listings here however, are primarily for identification purposes, they will also show if you have the correct type fitted (engine numbers are quoted to help identify original factory specification, and relate to carb's fitted when the vehicle was new and not subsesquent rplacements). To check, they can be positively identified by a silver tag which is located on the float chamber and marked with the part number, ie; AUD634F (Front) or AUD634R (Rear). Having identified your carburettors, all you need do is then refer to the corresponding components.

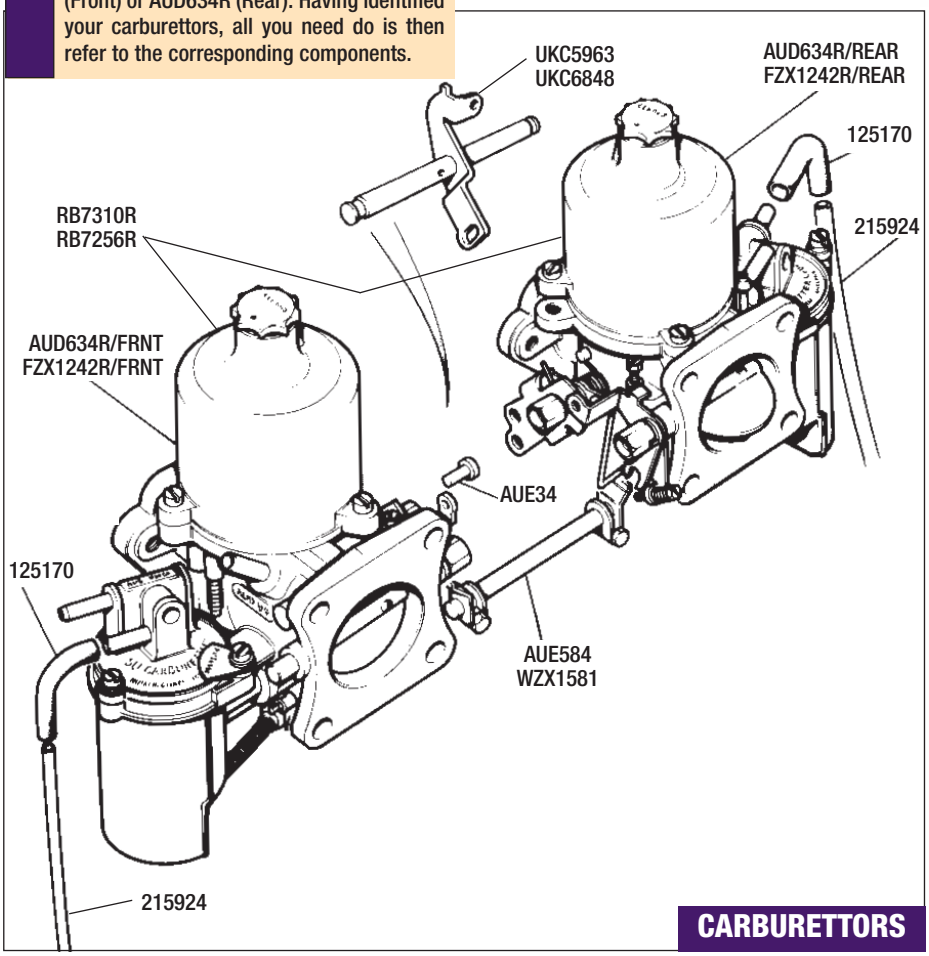

CARBURETTORS

Carburettors (SU HS6)

Note; Reconditioned carb's are sold on a exchange basis.
It is advisable to fit reconditioned carburettors in pairs.

Carburettors (Pair) *(Reconditioned);*		
To Engine No CG2715	(1)	**RB7310R**
From Engine No CG2716 *Waxstat type*	(1)	**RB7256R**
Front Carburettor *(Reconditioned);*		
To Engine No CG2715	(1)	**AUD634R/Frnt**
From Engine No CG2716 *Waxstat type*	(1)	**FZX1242R/Frnt**
Rear Carburettor *(Reconditioned);*		
To Engine No CG2715	(1)	**AUD634R/Rear**
From Engine No CG2716 *Waxstat type*	(1)	**FZX1242R/Rear**
Throttle Lever/Link Rod;		
To Engine No CG42	(1)	**UKC5963**
From Engine No CG43	(1)	**UKC6848**
Solderless Nipple *(Choke cable)*	(1)	**AUE34**
Choke Rod/Lever *(Carb' connecting); Including end levers AUE586/587.*		
For Carbs AUD634		**AUE584**
For Carbs FZX1242	(1)	**WZX1581**
End Lever Linkage-Front	(1)	**AUE586**
End Lever Linkage-Rear	(1)	**AUE587**
Rubber Elbow	(2)	**125170**
Fuel Overflow Pipe	(2)	**215924**
Vacuum Pipe* *(Carb to distributor)*	(1)	**UKC2110**
Rubber Elbow* *(Vacuum pipe)*	(2)	**128262**

See also; **Engine Breather.*

Description Qty Req. Part No. Description Qty Req. Part No. Description Qty Req. Part No.

CARBURETTOR COMPONENTS, SERVICE KITS & FLOAT CHAMBERS

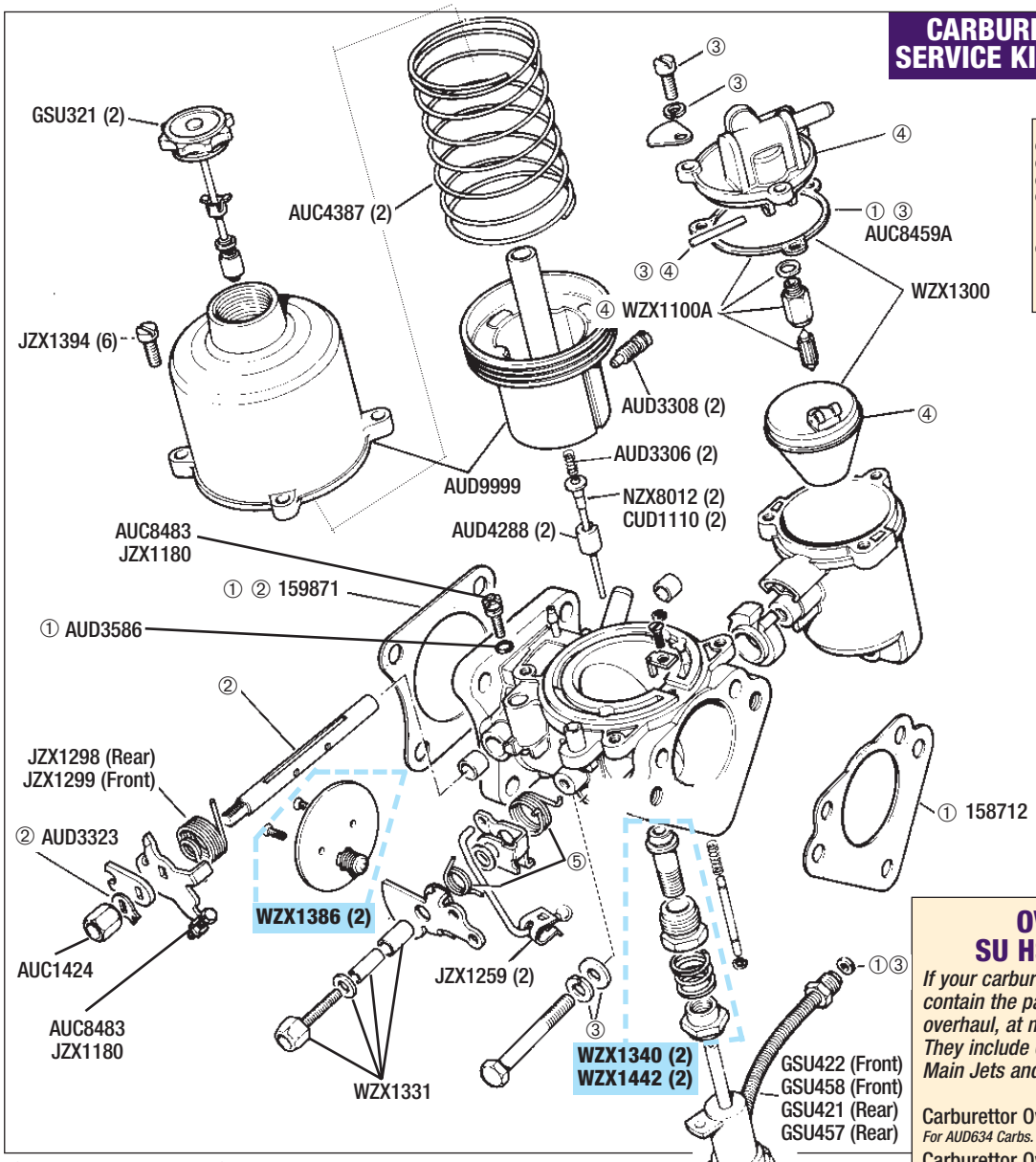

IDENTIFICATION NUMBERS

① Part of Gasket Kit	GSU522
② Part of Spindle Kit	WZX1178
③ Part of Chamber Service Kit	WZX1391
④ Part of Float Chamber Lid Kit	
Front Float Chamber	AUE277
Rear Float Chamber	AUE274
⑤ Choke Cam Return Spring Set:-	WZX1335
	WZX1336
	WZX1339
	WZX1338

OVERHAUL KITS - SU HS6 CARBURETTORS

If your carburettors are simply 'tired', our kits contain the parts you need to carry out a basic overhaul, at minimum cost.
They include Gaskets, Needles, Front & Rear Main Jets and Needle Float Valve Kits.

Carburettor Overhaul Kit *(For 2 carbs)* *For AUD634 Carbs.*	(1)	RB7084
Carburettor Overhaul Kit *(For 2 carbs)* *For FZX1242 (Waxstat type) Carbs.*	(1)	RB7036

Carburettor Components, Service Kits & Float Chambers (SU HS6)

COMPONENT IDENTIFICATION NUMBERS
Where there is a 'circled-number' (alongside a BL part number and/or part) in this 'Carburettor Components' illustration, it denotes the item is available either separately, or as part of a kit. Where a 'circled-number' appears on its own, then that component is available only as part of a service kit.

CARBURETTOR COMPONENTS

Kits are 'per carburettor' unless stated otherwise.

Gasket Kit *(Per carb)* *Includes items numbered 1 in illustration.*	(2)	GSU522
Throttle Return Spring	(3)	159463
Damper/Piston *(Dashpot)*	(2)	GSU321
Dashpot Cover & Piston	(2)	AUD9999
Retaining Screw	(6)	JZX1394
Spring *(Piston/damper)*	(2)	AUC4387
Grub Screw *Locates metering needle NZX8012.*	(2)	AUD3308
Spring *(Metering needle)*	(2)	AUD3306
Metering Needle;		
Standard	(2)	NZX8012
Performance*	(2)	CUD1110

**Use with tubular manifold and K & N air filters.*

***Note:** When fitting K & N air filters and retaining the standard exhaust manifold, it is usually possible to adjust the standard needles to suit. This also applies when fitting tubular manifolds and retaining the standard air filter.*
*See also; **K & N Air Filters** and **EXHAUST-Sports Exhaust Tubular Manifold.***

Needle Guide *(Metering needle)*	(2)	AUD4288
Gasket *(Carb to inlet manifold)*	(2)	159871
Screw *(Throttle stop/idle adjustment);*		
For Carbs AUD634	(2)	AUC8483
For Carbs FZX1242	(2)	JZX1180
Tension Spring *For screw AUC8483/carbs AUD634.*	(2)	AUC2451
'O' Ring *For screw JZX1180/carbs FZX1242.*	(2)	AUD3586
Throttle Spindle Kit *Includes items numbered 2 in illustration.*	(2)	WZX1178
Spring-Throttle Spindle Return;		
Front Carburettor	(1)	JZX1299
Rear Carburettor	(1)	JZX1298
Butterfly/Disc Kit	(2)	WZX1386
Retaining Clip *(Link)*	(2)	JZX1259
Screw *(Fast Idle Adjustement);*		
For Carbs AUD634	(2)	AUC8483
For Carbs FZX1242	(2)	JZX1180
Tension Spring *(Fast idle screw);*		
For Carbs AUD634	(2)	AUC2451
Spire Clip *(Fast idle screw);*		
For Carbs FZX1242	(2)	RB7013
Locking Tab	(2)	AUD3323
Nut	(2)	AUC1424
Pivot Bolt & Bushes	(2)	WZX1331
Choke Cam Spring Kit; *Includes items numbered 5 in illustration.*		
Front *(For Carbs AUD634)*	(1)	WZX1335
Rear *(For Carbs AUD634)*	(1)	WZX1336
Front *(For Carbs FZX1242)*	(1)	WZX1339
Rear *(For Carbs FZX1242)*	(1)	WZX1338

Main Jet Bearing Kit;		
For Carbs AUD634	(2)	WZX1340
For Carbs FZX1242 *(Waxstat type)*	(2)	WZX1442
Seal-Jet Bearing	(2)	AUC8478
Main Jet-Front;		
For Carbs AUD634	(1)	GSU422
For Carbs FZX1242 *(Waxstat type)*	(1)	GSU458
Main Jet-Rear;		
For Carbs AUD634	(1)	GSU421
For Carbs FZX1242 *(Waxstat type)*	(1)	GSU457
Bracket-Jet Locating *(For Carbs AUD634);*		
For Front Jet	(1)	AUD2427
For Rear Jet	(1)	AUD2428
Screw *(For AUD2427/2428)*	(2)	AUD2104
Gasket *(Carb to air cleaner)*	(2)	158712

FLOAT CHAMBER

Float Chamber Lid Kit; *Includes items numbered 4 in illustration.*		
Front	(1)	AUE277
Rear	(1)	AUE274
Float Chamber Service Kit *Includes items numbered 3 in illustration.*	(2)	WZX1391
Gasket-Float Chamber	(2)	AUC8459A
Needle/Float Level Valve	(2)	WZX1100A
Float & Gasket	(2)	WZX1300

TO ORDER: 01522 568000
www.rimmerbros.co.uk

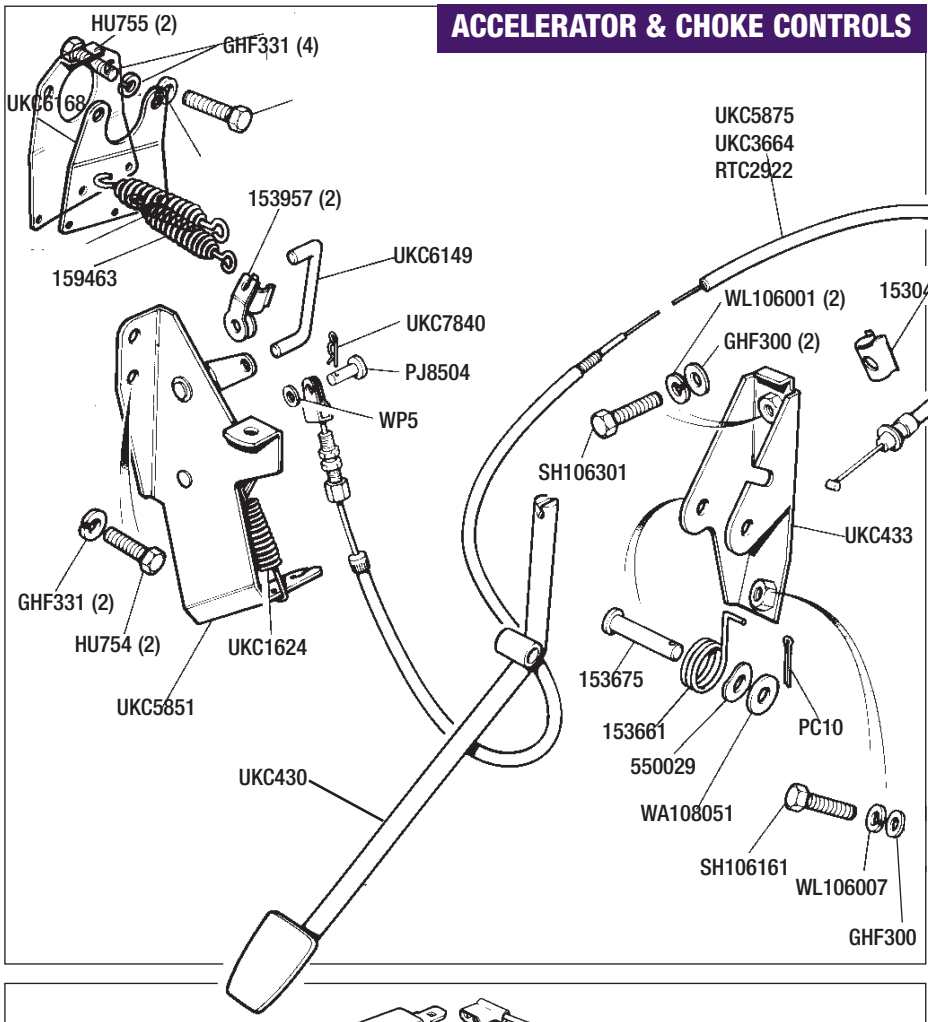

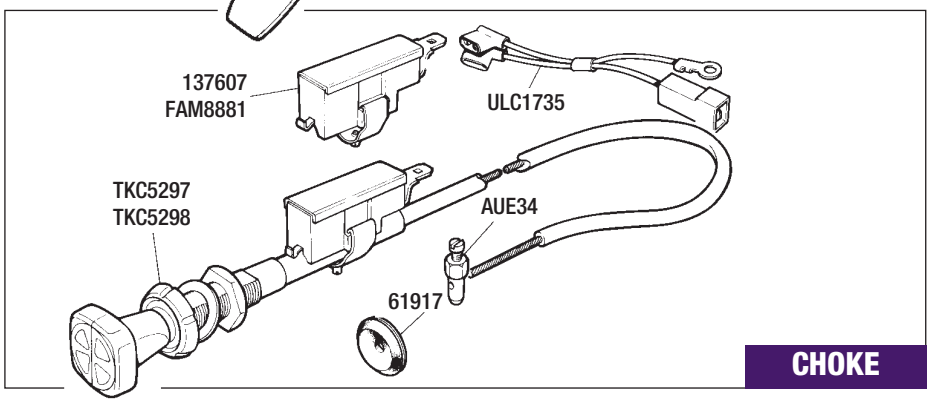

Accelerator & Choke Controls

Description	Qty Req.	Part No.
ACCELERATOR		
Accelerator Pedal *(Rhd vehicles)*	(1)	UKC430
Spring Clip *(Cable to pedal)*	(1)	153041
Accelerator Cable *(All Rhd models)*	(1)	UKC5875
Accelerator Cable *(Lhd models);*		
Short Routing Cable *(110cm long)*	(1)	UKC3664
Long Routing Cable *(160cm long)*	(1)	RTC2922
Clevis Pin *(Cable to linkage)*	(1)	PJ8504
Washer	(1)	WP5
Spring Clip/Pin	(1)	UKC7840
Kick Down Cable *(Automatics only)*	(1)	TKC3760
Bracket *(Pedal mounting)*	(1)	UKC433
Setscrew *(Lower mounting)*	(1)	SH106161
Washer-Spring	(1)	WL106007
Washer-Flat	(1)	GHF300
Clevis Pin *(Pedal locating)*	(1)	153675
Spring-Pedal Return	(1)	153661
Washer	(1)	550029
Washer	(1)	GHF301
Split Pin	(1)	PC10
Setscrew *(Upper mounting)*	(1)	SH106301
Washer-Spring	(1)	WL106001
Washer-Flat	(1)	GHF300
Mounting Bracket/Linkage	(1)	UKC5851
Setscrew *(For UKC5851)*	(2)	HU754
Washer-Spring	(2)	GHF331
Spring *(Throttle link)*	(1)	UKC1624
Throttle Link	(1)	UKC6149
Clip *(Link rod retaining)*	(1)	153957
Spring *(Throttle return)*	(3)	159463
Bracket *(Locates on manifold)* *For throttle return springs.*	(1)	UKC6168
Setscrew	(2)	HU755
Washer-Spring	(4)	GHF331
CHOKE		
Choke Cable *(Less switch);*		
Rhd Vehicles	(1)	TKC5297
Lhd Vehicles	(1)	TKC5298
Switch-Choke Warning Light;		
Single Connection	(1)	137607
Double Connection	(1)	FAM8881
Lead/Harness *For choke 'warning light' switch.*	(1)	ULC1735
Solderless Nipple *(Choke cable)*	(1)	AUE34
Grommet *(Located in bulkhead)*	(1)	61917

Description Qty Req. Part No. Description Qty Req. Part No. Description Qty Req. Part No.

AIR CLEANER ASSEMBLY *EARLY VEHICLES*

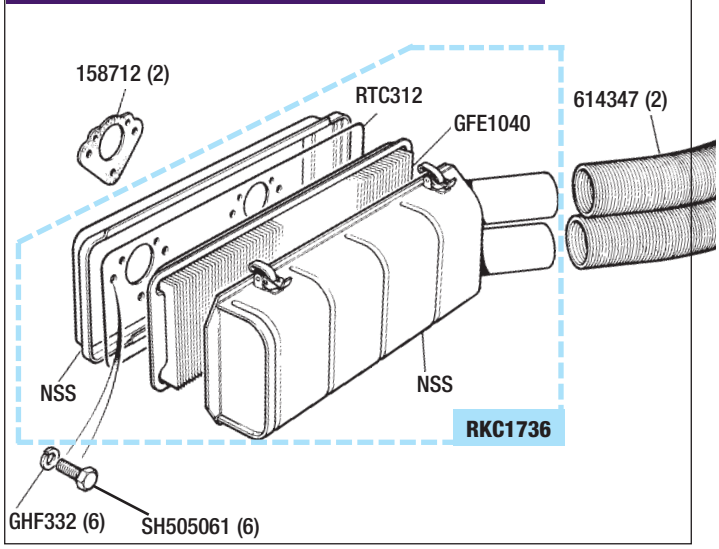

AIR CLEANER ASSEMBLY *LATE VEHICLES*

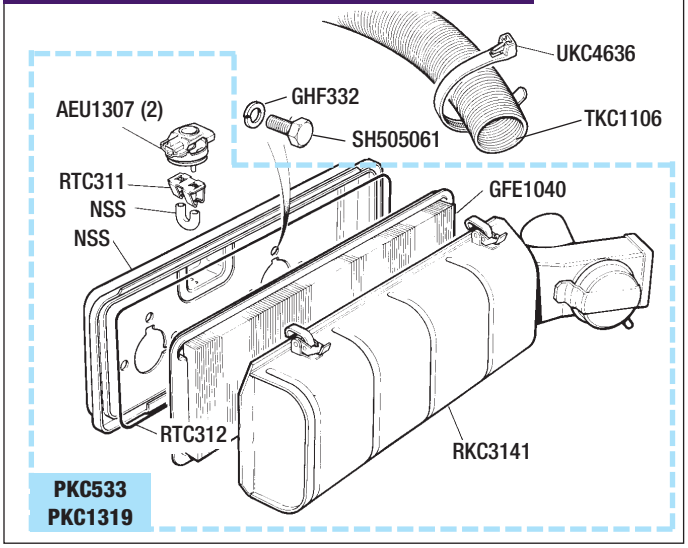

Air Cleaner - Standard

*See also; **Engine Breather** and **EXHAUST-Manifold & Fittings.***

AIR CLEANER-STANDARD *(Early vehicles to 1978)*

Twin air intake pipes.

Air Cleaner Assembly	(1)	**RKC1736**
Air Filter		
Standard	(1)	**GFE1040**
K&N *(Replacement for standard filter)*	(1)	**GFE1040KN**
Rubber Seal *(Air cleaner lid sealing)*	(1)	**RTC312A**
Setscrew	(6)	**SH505061**
Washer-Spring	(6)	**GHF332**
Gasket *(Air cleaner to carburettor)*	(2)	**158712**
Intake Hose (Flexible)	(2)	**614347**

AIR CLEANER-STANDARD *Vehicles 1978 on to VIN 200526, and Late Vehicles 1980 onwards from VIN 200527.*

Single 'Hot' air intake pipe.

Air Cleaner Assembly;		
Vehicles 1978 to VIN 200256	(1)	**PKC533**
Late Vehicles from VIN 200527*(1)		**PKC1319**
Air Cleaner Assembly Outer only;		
Late Vehicles from VIN 200527*(1)		**RKC3141**
Air Filter*		
Standard	(1)	**GFE1040**
K&N *(Replacement for standard filter)*	(1)	**GFE1040KN**

***Note**: The later type air cleaner assembly (VIN 200527 onwards) used a different air filter (GFE1095) & rubber seal (AEU1704).*
The air filter listed (GFE1040) will fit all applications.

Rubber Seal *(Air cleaner lid sealing)*	(1)	**RTC312A**
Setscrew	(6)	**SH505061**
Washer-Spring	(6)	**GHF332**
Heat Control Valve *(Sensor unit)*	(1)	**AEU1307**
Retaining Clip *(For AEU1307)*	(1)	**RTC311A**
Gasket *(Air cleaner to carburettors)*	(2)	**158712**
Flexible Hose	(1)	**TKC1106**
Hot air intake from manifold.		
Retaining Strap	(1)	**UKC4636**

INFORMATION LABELS *(All Vehicles)*

Information Label-Air Cleaner	(1)	**RB7097**
Information Label Kit	(1)	**RB7091**

*See also; **ACCESSORIES**.*
***CAR set includes the following labels**; Tyre pressures, Engine Data, E11, Air Box, Headlamps, Unipart, Brake Data, and Hood instructions. The labels are also available separately.*

AIR CLEANER BOX - RKC1736

K & N FILTERS ARE RE-USABLE & HELP IMPROVE PERFORMANCE

Air Cleaner - K&N

K&N AIR FILTERS

For improved engine breathing & performance.
THEY LOOK GOOD TOO!

K&N Air Filter	(2)	**RB7070**
Cleaning Fluid *(K&N filters/1 litre)*	(a/r)	**RX1346**
Use to clean elements when servicing.		
Element Oil *(K&N filters);*		
Use to re-oil filter elements after cleaning.		
1fl ounce Sachet	(a/r)	**RX1347**
250ml Bottle	(a/r)	**RX1348**
400ml Aerosol	(a/r)	**RX1349**

***Note;** When fitting 'K&N' Air Filters and/or Tubular Exhaust Manifold, the carb needles may need to be changed.*
See also; Carburettor Components, EXHAUST-Tubular Exhaust Manifold, and Sports Exhaust System.

K&N AIR FILTER CONVERSION KIT

For improved engine breathing & performance
See Photo.

K&N Filter Kit 'A'	(1)	**RB7367**
Use with standard exhaust manifold. Includes pair of K&N filters.		
NB: adjust standard carb needles to suit if required.		
K&N Filter Kit 'B'	(1)	**RB7368**
Use with tubular exhaust manifold.		
Includes pair of K&N filters and carb needles.		
To suit tubular manifold application		

ENGINE BREATHER

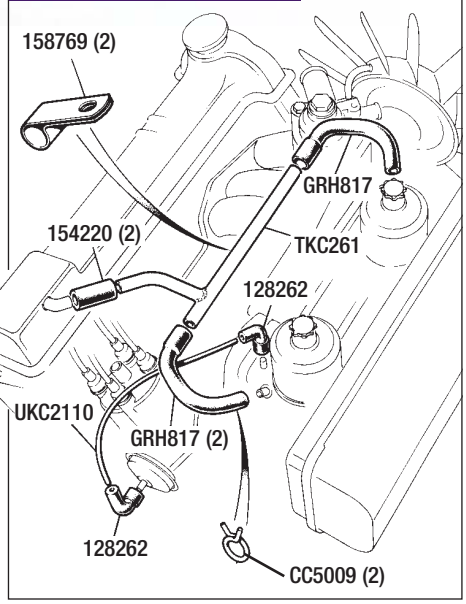

Engine Breather

Breather Pipe-Steel	(1)	**TKC261**
Retaining Clip	(2)	**158769**
Breather Hose	(2)	**GRH817**
Breather Hose-Straight	(1)	**154220**
'Corbin' Clip	(2)	**CC5009**
Vacuum Pipe *(Carb to distributor)*	(1)	**UKC2110**
Rubber Elbow *(Vacuum pipe)*	(2)	**128262**

TO ORDER: 01522 568000
www.rimmerbros.co.uk

Description Qty Req. Part No.

FUEL PUMP ASSEMBLY

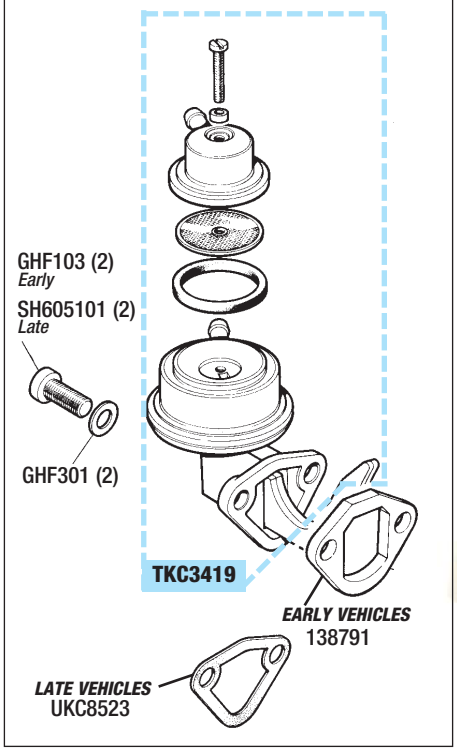

Fuel Pump Assembly

Fuel Pump Assembly;
Note; *Late fuel pump TKC3419 can be fitted to early vehicles if fitted with the corresponding spacer block & setscrews (UKC8523 & SH605101).*

Early Vehicles *(to approx 1977)*	(1)	**312167**
Late Vehicles *(from approx 1977)*	(1)	**TKC3419**
Gasket;		
Early Vehicles *(to approx 1977)*	(1)	**138791**
Spacer;		
Late Vehicles *(from approx 1977)*	(1)	**UKC8523**
Setscrew *(Pump to block);*		
Early Vehicles *(to approx 1977)*	(2)	**GHF103**
Late Vehicles *(from approx 1977)*	(2)	**SH605101**
Washer *(For 149763 & SH605101)*	(2)	**GHF301**

Description Qty Req. Part No.

Description Qty Req. Part No.

Fuel Pipes & Fittings

Fuel Pipe Kit	(1)	**RB7112**
Complete Kit from Tank to Carb's inc; copper pipe, unions & clips.		
Fuel Hose Kit	(1)	**RB7001**
Inc rubber hoses & clips for tank, pump and carbs.		
Hose/Connector *(to fuel tank)*	(1)	**149614**
Fuel Pipe-Steel	(1)	**PKC390**
Tank to main fuel pipe.		
Connector *(male/male)*	(1)	**UKC3775**
Sleeve Nut	(1)	**UKC3776**
Fuel Pipe-Steel	(1)	**UKC2810**
Main fuel pipe, underside of vehicle.		
Clip *(Fuel pipe to body)*	(6)	**ZKC923**
Grommet	(1)	**600396**
Hose/Connector	(1)	**159425**
Main pipe to pump.		
Clamp *(Hose to pipe)*	(4)	**UKC3795**
Hose/Connector	(1)	**149614**
Pump to carburettor feed pipe.		
Feed Pipe *(to carburettors)*	(1)	**TKC1609**
Clip	(6)	**150930**
Fuel pipe to air cleaner.		
Clamp *(Pipe to hose)*	(2)	**UKC3793**
Hose/Connectors;		
Feed pipe to carb's.		
Front Carburettor	(1)	**125170**
Rear Carburettor	(1)	**145735**

FUEL PIPES & FITTINGS

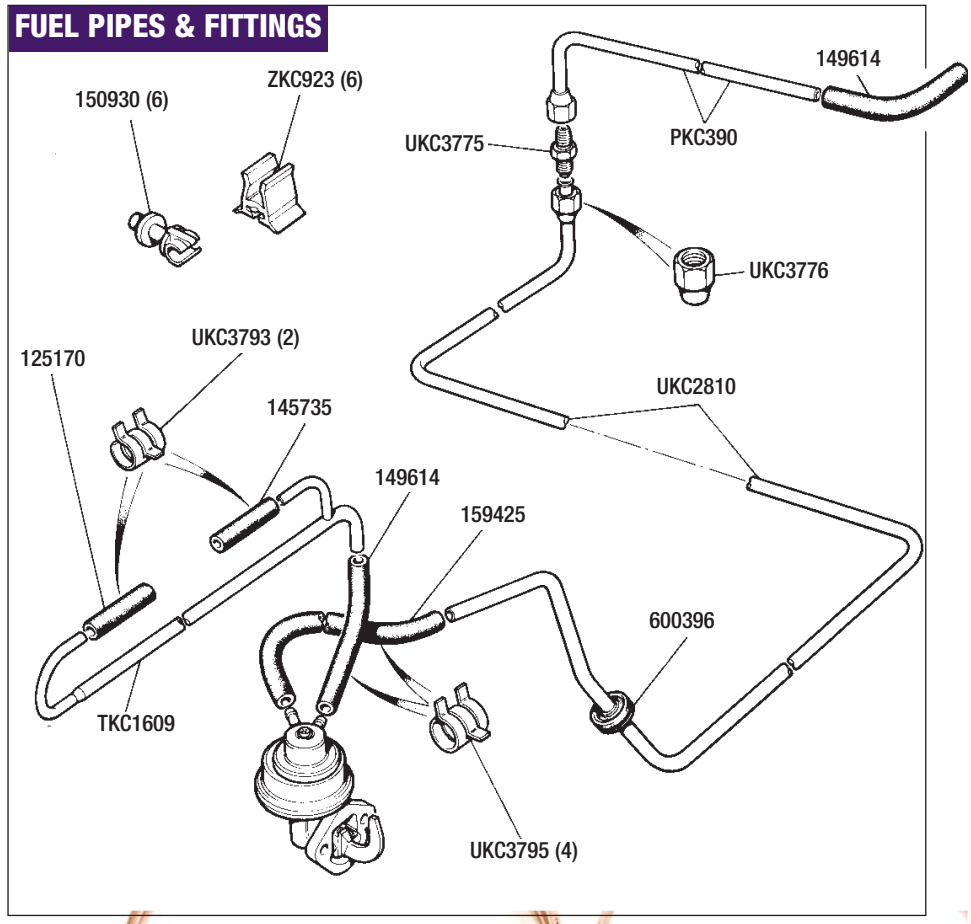

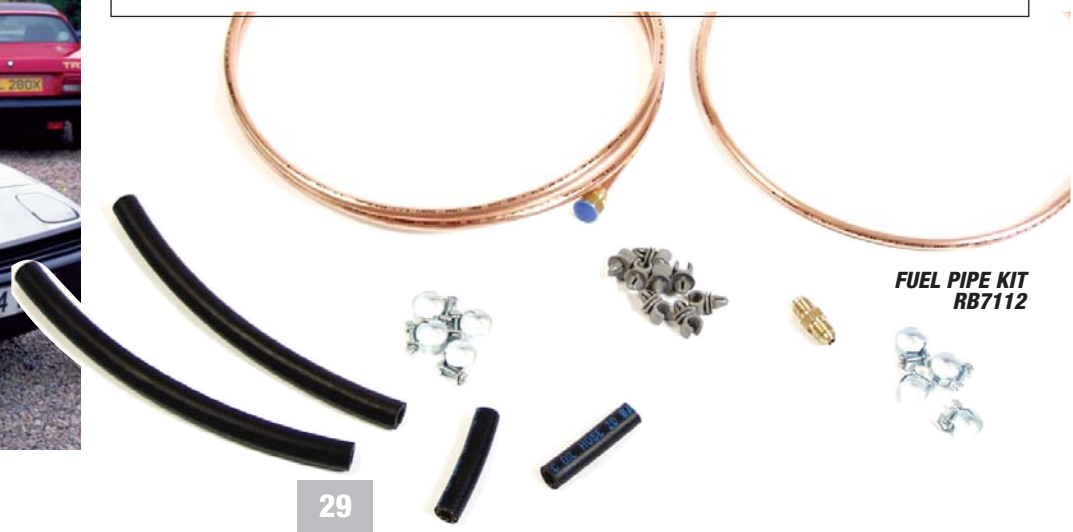

Fuel Tank & Fittings

Description	Qty Req.	Part No.
Fuel Tank	(1)	**RKC3554**
Fuel Sender Unit *(Includes seal & retainer)*		
TR7	(1)	**TKC3408**
TR8	(1)	**TKC3415**
Seal *(Tank sender unit)*	(1)	**ARA1502**
Retainer *(Tank sender unit)*	(1)	**ARA1501**
Relay *("Low fuel" warning)* *See also; ELECTRICAL-Relays.*	(1)	**UKC7096**
Support Strap	(2)	**TKC131**
Packing Strip *(Lower)*	(2)	**UKC255**
Stud *(Tank mounting)*	(4)	**UKC1468**
Washer-Flat	(4)	**GHF302**
Nut-Locking	(4)	**GHF233**
Packing Strip *(Upper)*	(2)	**UKC255**
Vent Hose *(Tank to atmosphere)*	(1)	**149610**
Clip *(For149610)*	(2)	**GHC406**

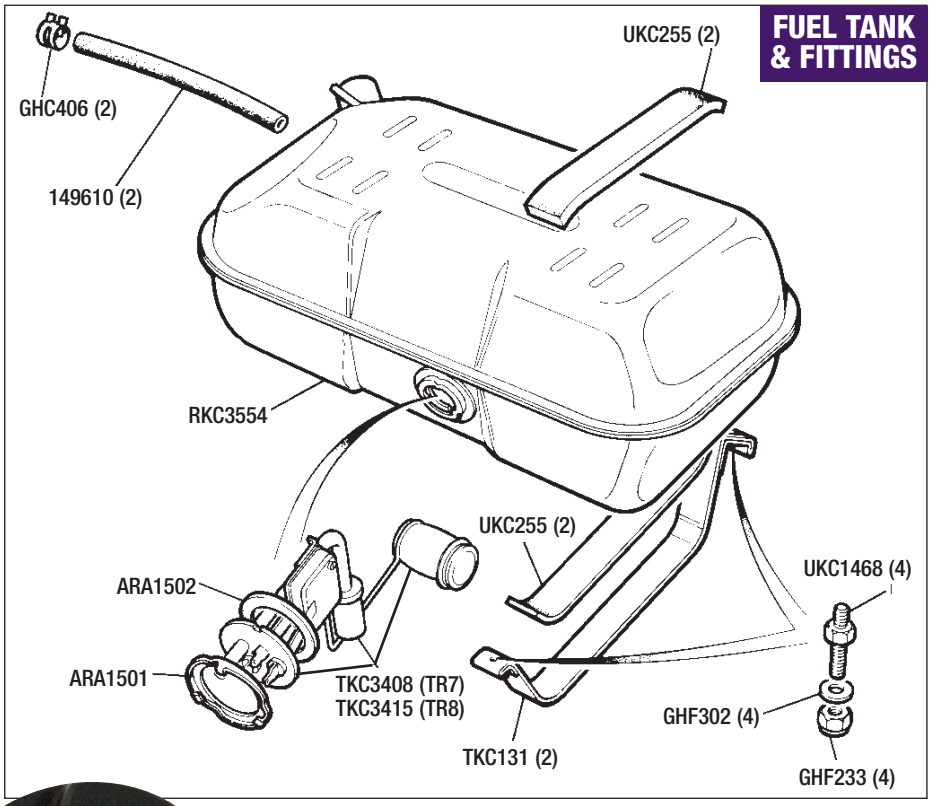

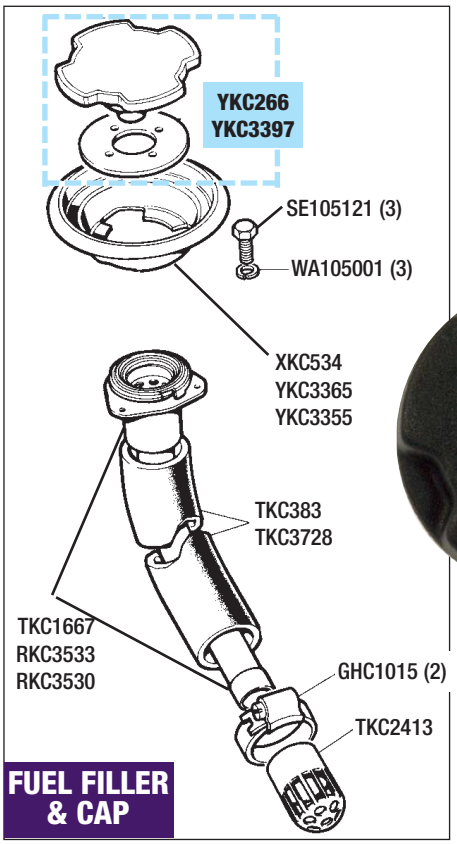

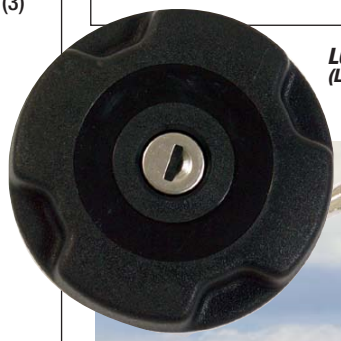

LOCKING FUEL CAP RB7066
(LATE MODELS)

Fuel Filler & Cap

Description	Qty Req.	Part No.
Fuel Filler Cap;		
Early *(Large type Coupe only)* *Vehicles to ACG25000/1978.*	(1)	**YKC266**
Spring only	(1)	**YKC266SPRING**
Seal only	(1)	**YKC266SEAL**
Late *(Small type)* *Vehicles from ACG25001/1978.*	(1)	**YKC3397**
Late *(Small type-Locking)*	(1)	**RB7066**
Bezel-Fuel Filler Cap;		
All Convertible Models	(1)	**YKC3355**
Early Coupe Models	(1)	**XKC534**
Late Coupe Models	(1)	**YKC3365**
Setscrew *(Bezel to body)*	(3)	**SE105121**
Washer-Spring	(3)	**WA105001**
Fuel Filler Pipe *(Not USA);*		
All Convertible Models	(1)	**RKC3530**
Early Coupe Models	(1)	**TKC1667**
Late Coupe Models	(1)	**RKC3533**
Hose *(Fuel Filler Pipe);*		
Convertible & Coupe models.		
Early *(Coupes only)*	(1)	**TKC383**
Late *(Convertibles & Coupes)*	(1)	**TKC3728**
Hose Clip	(2)	**GHC1015**
Anti-Syphon Nozzle *(Plastic)*	(1)	**TKC2413**

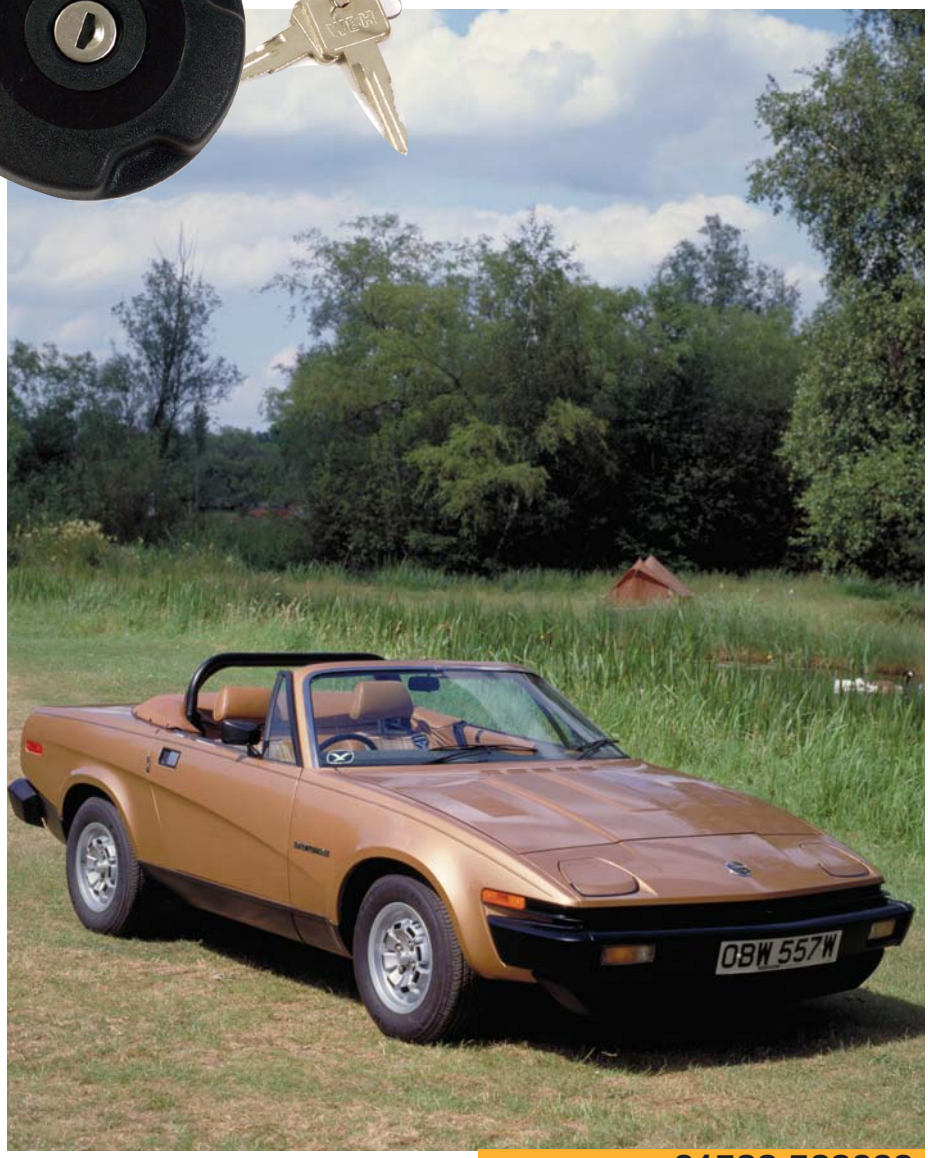

TO ORDER: 01522 568000
www.rimmerbros.co.uk

EXHAUST SYSTEM

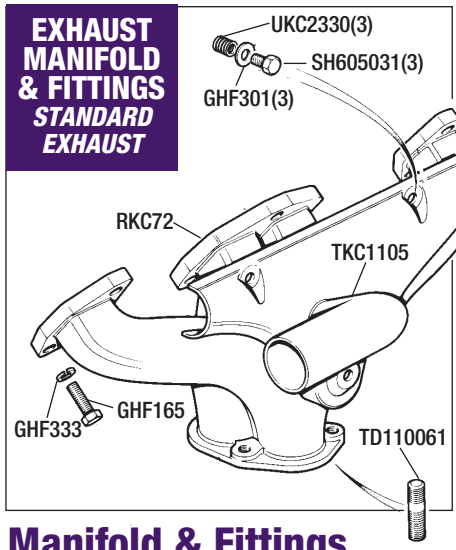

Manifold & Fittings (Standard)

Description	Qty Req.	Part No.
Exhaust Manifold;		
New	(1)	RKC72
Reconditioned	(1)	RKC72R
Bolt *(Manifold fixing)*	(7)	GHF165
Washer-Spring *(For GHF165)*	(7)	GHF333
Exhaust Manifold Gasket Set *Manifold to cylinder head-If required.*	(1)	RB7006
Gasket *(Manifold to front pipe)*	(1)	GEG732
Stud *(Manifold to front pipe)*	(3)	TD110061
Washer-Flat *(For TD110061)*	(3)	GHF302
Washer-Spring *(For TD110061)*	(3)	WL110001
Nut (Brass) *(For TD110061)*	(3)	UKC4212
Heat Shield/Intake Duct *Note; heat shields were fitted as standard on vehicles from 1979, with hot air intake pipe (TKC1106), and late type air cleaner box. See also;* ***FUEL SYSTEM - Air Cleaner Assembly.***	(1)	TKC1106
Flexible Hose *Hot air intake to air cleaner.*	(1)	TKC1106
Retaining Strap	(1)	UKC4636
Setscrew *Heat shield/duct to manifold.*	(3)	SH605031
Washer-Flat	(3)	GHF301
Helicoil Insert	(3)	UKC2330

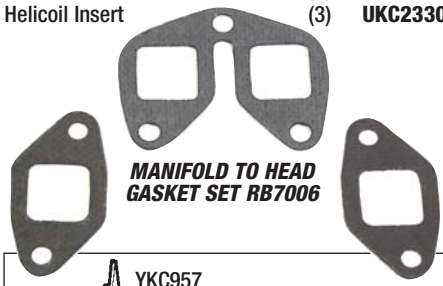

MANIFOLD TO HEAD GASKET SET RB7006

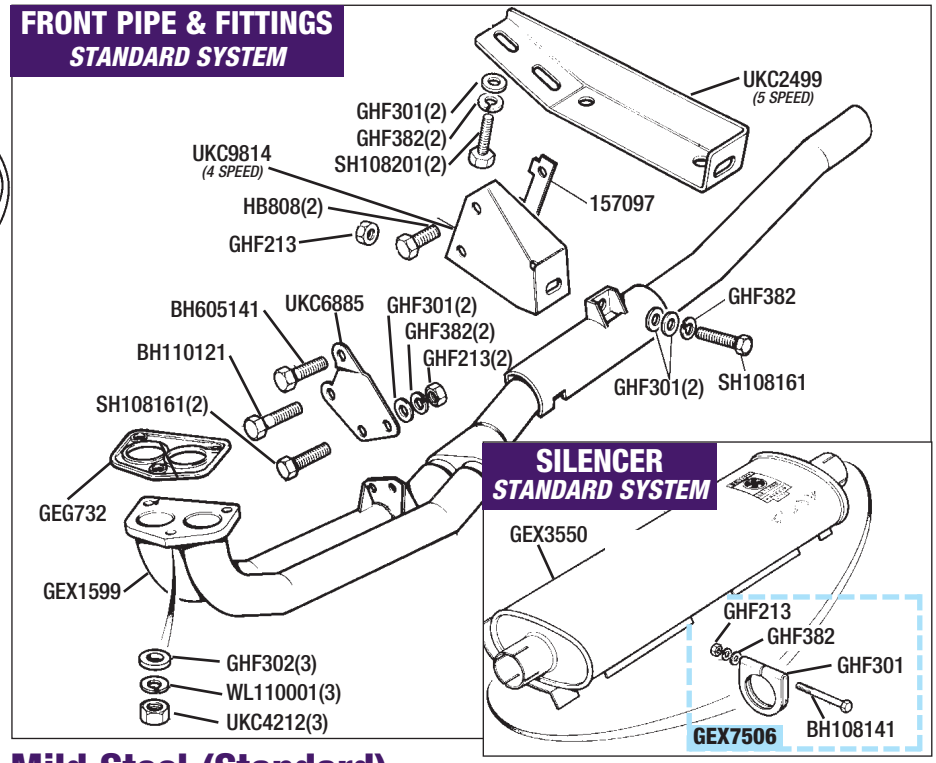

Mild Steel (Standard) Exhaust System & Components

Description	Qty Req.	Part No.
Exhaust System *(Mild steel) Includes front pipe, silencer, & tail pipe.*	(1)	RB7033
Fitting Kit *(Includes items marked*)*	(1)	RB7033FK
Jointing Compound*	(a/r)	GCH112

FRONT PIPE & FITTINGS;

Description	Qty Req.	Part No.
Front Pipe Assembly	(1)	GEX1599
Gasket*	(1)	GEG732
Stud *(Manifold to front pipe)*	(3)	TD110061
Washer-Flat *(For TD110061)*	(3)	GHF302
Washer-Spring *(For TD110061)*	(3)	WL110001
Nut (Brass) *(For TD110061)*	(3)	UKC4212
Mounting Bracket-Front	(1)	UKC6885
Bolt	(1)	BH605141
Bolt	(1)	BH110121
Setscrew	(2)	SH108161
Washer-Flat	(2)	GHF301
Washer-Spring	(2)	GHF382
Nut	(2)	GHF213
Setscrew *To rear mounting bracket, all models.*	(1)	SH108161
Washer-Spring	(2)	GHF382
Washer-Flat	(2)	GHF301
Nut	(2)	GHF213
Mounting Bracket-Rear (4sp)	(1)	UKC9814
Tab Washer	(1)	157097
Bolt *(For UKC9814)*	(2)	GHF103
Mounting Bracket-Rear (5sp)	(1)	UKC2499
Setscrew *(For UKC2499)*	(2)	SH108201
Washer-Spring	(2)	GHF382
Washer-Flat	(2)	GHF301
Mounting Bracket-Rear *(Auto)*	(1)	UKC2498

MAIN SILENCER & FITTINGS;

*Items marked * are included in exhaust fitting kit RB7056.*

Description	Qty Req.	Part No.
Silencer Box *(Centre main)*	(1)	GEX3550
Exhaust Clamp Assembly*	(2)	GEX7506
Bolt	(2)	BH108141
Washer-Flat	(2)	GHF301
Washer-Spring	(2)	GHF382
Nut	(2)	GHF213

TAIL PIPE ASSEMBLY & FITTINGS;

*Items marked * are included in exhaust fitting kit RB7056.*

Description	Qty Req.	Part No.
Tail Pipe/Box Assembly	(1)	GEX3673
Mounting Bracket-Front	(1)	UKC2404
Setscrew	(2)	SH108161
Washer-Spring	(2)	GHF382
Nut	(2)	GHF213
Mounting Bush-Rubber	(1)	GEX7479
Mounting Ring-Rubber*	(2)	GEX7487
Mounting Bracket-Upper	(1)	YKC957
Setscrew	(4)	SH108201
Washer-Spring	(4)	GHF332
Washer-Flat	(4)	GHF301
Mounting Bracket-Rear Upper*	(1)	UKC5048
Mounting Ring-Rubber*	(2)	GEX7487
Mounting Bracket-Rear Lower*	(1)	UKC5050
Washer-Spring	(2)	GHF382
Nut	(2)	GHF213

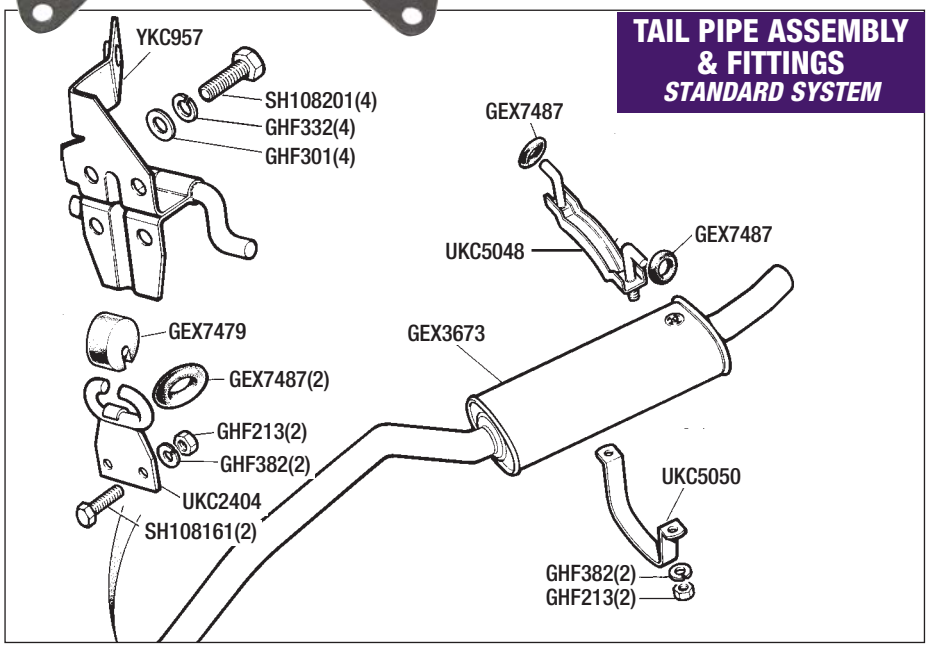

EXHAUST FITTING KITS, BRACKETS & MOUNTING.

Description	Qty Req.	Part No.

Stainless Steel Exhaust Systems - Standard

Exhaust System *(Stainless steel)* *Includes front pipe, silencer, & tail pipe.*		
with Standard Tailpipe	(1)	**RB7015**
with Large Bore Tailpipe	(1)	**RB7015LB**
Fitting Kit *Includes all items marked * under Mild Steel Exhaust System & Components*	(1)	**RB7015FK**
Front Pipe	(1)	**GEX1599SS**
Centre Silencer	(1)	**GEX3550SS**
Rear Tail Pipe		
Standard Tail Pipe	(1)	**GEX3673SS**
Large Bore Tail Pipe	(1)	**GEX3673LBSS**

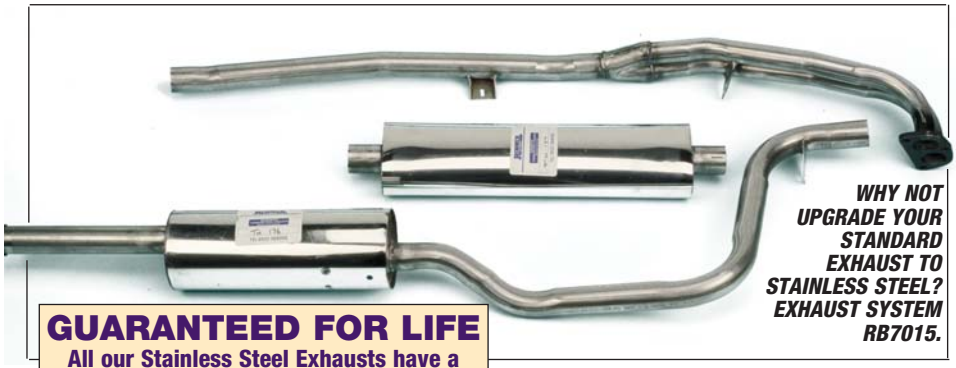

WHY NOT UPGRADE YOUR STANDARD EXHAUST TO STAINLESS STEEL? EXHAUST SYSTEM RB7015.

GUARANTEED FOR LIFE
All our Stainless Steel Exhausts have a Lifetime Guarantee.
Please refer to 'warranties' in our latest price guide for full details.

Sports Stainless Steel Exhaust Systems

Sports Exhaust System inc Manifold *Including stainless steel tubular manifold.*		
RHD Vehicles	(1)	**RB7021**
LHD Vehicles	(1)	**RB7021LHD**
Fitting Kit *Includes clamps, rear hanger, support rings, manifold gaskets & jointing compound.*	(1)	**RB7021FK**
Sports Exhaust System ***Less*** *stainless steel tubular manifold. System couples directly to our Tubular Sports Manifold, or can be adapted to fit Standard Front Pipe using adaptor sleeve.*	(1)	**RB7049**
Adaptor Sleeve *Allows sports system to couple to standard front pipe.*	(1)	**RB7024**
Fitting Kit *(For RB7049)* *Includes clamps, rear hanger, support rings & jointing compound.*	(1)	**RB7049FK**

LARGE BORE STAINLESS STEEL SPORTS EXHAUST SYSTEM. COMPLETE KIT RB7021 & EXHAUST FITTINGS (RB7021FK).

IMPORTANT NOTE:
When fitting Sports Exhaust System and/or 'K & N' Air Filters, the carb metering needles may need to be changed, and/or the carbs re-adjusted. Refer to Fuel System, Carburettor Components.

OUR SPORTS EXHAUST TUBULAR MANIFOLD IS AVAILABLE IN STAINLESS STEEL.

Tubular Manifold Stainless Steel

Tubular Extractor Manifold - Stainless Steel; *For 8 valve engines only. For TR7 Sprint 16v manifold please refer to Sprint Conversions.*		
RHD Vehicles	(1)	**RB7073SS**
LHD Vehicles	(1)	**RB7073SSLHD**
Gasket Set *Tubular manifold to cylinder head.*	(1)	**RB7006**
Bolt *(Manifold to head)*	(7)	**GHF165**
Washer-Spring *(For GHF165)*	(7)	**GHF333**
Jointing Compound	(a/r)	**GCH112**

IMPORTANT NOTE:
When fitting Sports Tubular Manifold and/or 'K & N' Air Filters, the carb metering needles may need to be changed, and/or the carbs re-adjusted. Refer to Fuel System, Carburettor Components.

EXHAUST INSULATING WRAP

Thermo-Tec exhaust insulating wrap reduces under bonnet temperatures by as much as 70%, this increases air intake and exhaust gas velocity which adds performance. Retaining the heat in the exhaust protects you from mechanical burns and it will also help to prevent under bonnet fires. Any electrical components which are close to the manifold will be less prone to heat failure, increasing their life and performance. As an added benefit, under bonnet noise is also reduced! Thermo-Tec contains no asbestos or carcinogens.

The Snap Strap Installation Kit secures Thermo-Tec exhaust insulation wrap to your tubular manifold/s. A stainless steel high temperature material designed better than hose clamps and is easier to use.

Also recommended is Hy-cote paint. This preserves and protects the exhaust wrap after installation. Extra resins and binders seal the pores, toughen the surface and help extend the life of the wrap.

Exhaust Insulating Wrap - 2" x 50'	(1)	**RX1382**
Snap Strap Exhaust Wrap Installation Kit	(1)	**RX1383**
Hy-Cote Paint, Aerosol *(400ml)* *Available in black or aluminium.*	(1)	**RX1432**

COOL IT. Thermo-Tec

TO ORDER: 01522 568000
www.rimmerbros.co.uk

4 SPEED GEARBOX

Description	Qty Req.	Part No.

CATALOGUE INFORMATION

GEARBOXES

To help you identify and order the correct parts easily and quickly, we have listed 4 speed manual, 5 speed manual, and automatic gearboxes separately, along with their relative components and ancillaries.

Manual Gearbox

4 Speed Manual

Description	Qty Req.	Part No.
Gearbox (Reconditioned)	(1)	**UKC4023R**
Note; *Gearbox is supplied Less bellhousing, speedo pinion & housing, reverse light switch, and the 3 (small) front lower tension springs, which fit between the casing and bellhousing.*		
Bellhousing	(1)	**UKC1984**
Spring-Tension (3)	(3)	**137532**
Bellhousing to gearbox casing.		
Gasket	(1)	**UKC4128**
Bellhousing to gearbox casing.		
Gearbox Mounting	(1)	**TKC1044**
Unipart EP90 Gear Oil *(0.5 litre)*	(a/r)	**GGL190**
Gearbox capacity - 1.1 Litre.		

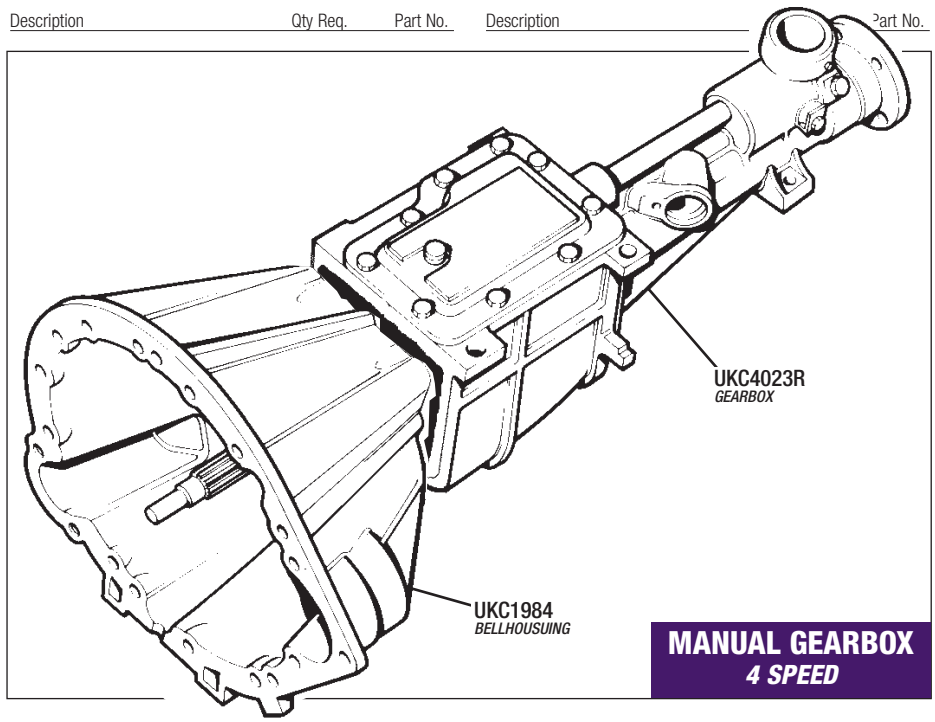

MANUAL GEARBOX
4 SPEED

Clutch Housing/Operation

4 Speed Manual

See also; ***ENGINE & CLUTCH-Clutch Pedal & Mounting.***

Description	Qty Req.	Part No.
Bellhousing	(1)	**UKC1984**
Clutch Operating Lever**	(1)	**LBU1234**
Slipper Pad	(2)	**159003**
Carrier/Sleeve**	(1)	**FRC5369A**
Clutch release bearing carrier.		
***NOTE; on early vehicles LBU1234 and FRC5369 MUST be fitted as a pair.*		
Clutch Release Bearing	(1)	**GRB209**
Fulcrum Pin *(Clutch operating lever)*	(1)	**UKC1774**
Bolt	(4)	**HB816**
Cable Tie	(4)	**UKC2543**
Washer-Spring	(4)	**GHF201**
Nut	(4)	**GHF201**
Dowel	(1)	**DP619**
Nut	(2)	**GHF201**
Washer-Spring	(2)	**GHF332**
Bolt	(2)	**HB816**
Washer	(2)	**GHF332**
Front End Cover *(Oil seal housing)*	(1)	**UKC1751**
Dowel	(1)	**DP205**
Oil Seal *(Front end cover)*	(1)	**132292**
Bolt	(1)	**BH605141**
Locates exhaust mounting bracket.		
Washer-Spring *(For BH605141)*	(1)	**GHF332**
Washer-Flat *(For BH605141)*	(1)	**GHF301**
Bolt	(3)	**GHF104**
Washer-Spring	(3)	**GHF332**
Setscrew	(2)	**SH110201**
Washer-Spring	(2)	**WL110001**
Washer-Flat	(2)	**GHF302**
Bolt *(Special)*	(1)	**UKC3270**
Washer-Spring	(1)	**GHF332**
Nut	(1)	**GHF202**

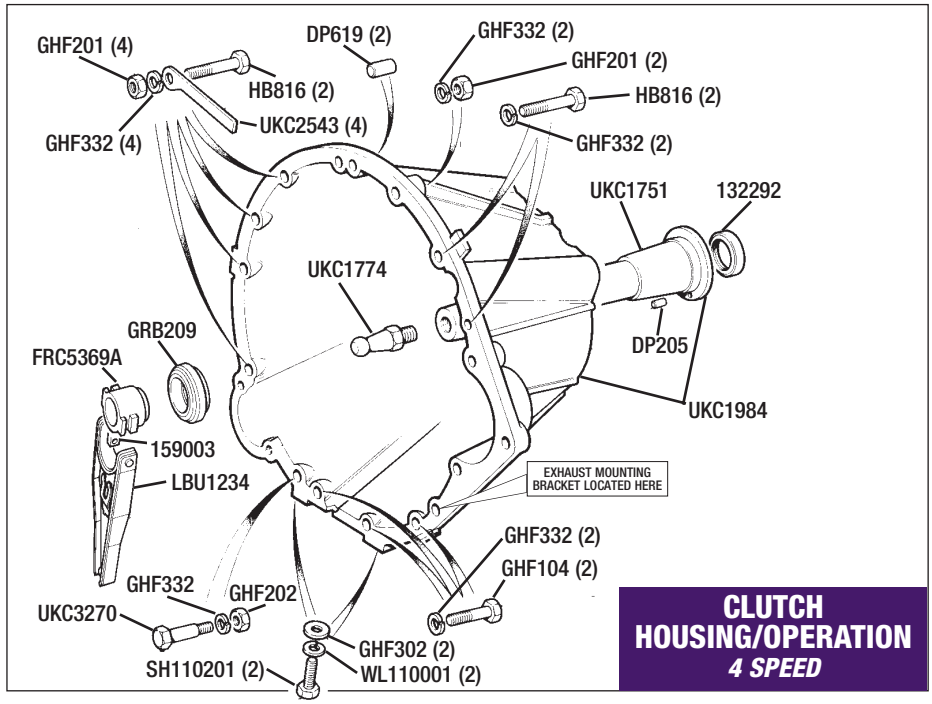

CLUTCH HOUSING/OPERATION
4 SPEED

TECHNICAL JOTTINGS

4 Speed Gearbox & Re-fitting the Bellhousing

There are 2 very important points to note when re-fitting the bellhousing to the gearbox;

1) Ensure the 3 tension springs (137532) are inserted in the front lower section of the gearbox casing.

2) Ensure the correct length bolts are fitted, if they are too long it may result in them protruding and fouling the internals.

RELATED COMPONENTS

If you are installing a 4 speed gearbox you may also require the following items;
Gasket (bellhousing to gearbox), Tension Springs (3), Oil Seal (bellhousing), Gearbox Mounting, Reverse light Switch.
It is also worth checking the condition of the Clutch Cover, Plate & Release Bearing.

TECHNICAL JOTTINGS

Re-fitting the 4 speed Propshaft

As recommended by British Leyland, when replacing or re-fitting the propshaft on vehicles fitted with 4 speed manual gearbox, the propshaft should be 'reversed', ie CV joint to the rear axle.

Gasket Set & Overhaul Kit

4 Speed Manual
Not Illustrated.

Description	Qty Req.	Part No.
Gasket Set	(1)	**RB7069**
Includes bellhousing, top cover, and rear casing gaskets.		
Gearbox Overhaul Kit	(1)	**RB7075**
Includes items marked + in the following sections, ie: countershaft, front & rear countershaft washers,synchro rings, bearings, circlips, needle rollers, gasket set & rear oil seal.		
Unipart EP90 Gear Oil (0.5 litre)	(a/r)	**GGL190**
Gearbox capacity - 1.1 Litre.		

Speedo Cable & Drive

4 Speed Manual
Not Illustrated.

Description	Qty Req.	Part No.
Speedometer Cable	(1)	**GSD287**
Speedo Drive Pinion	(1)	**219004**
23 teeth, colour code-Black.		
'O' Ring/Seal	(1)	**TRS1620**
Housing/Bearing *(Speedo drive pinion)*	(1)	**22G1486**
Oil Seal *(Speedo drive pinion)*	(1)	**NKC105A**

Description | Qty Req. | Part No.

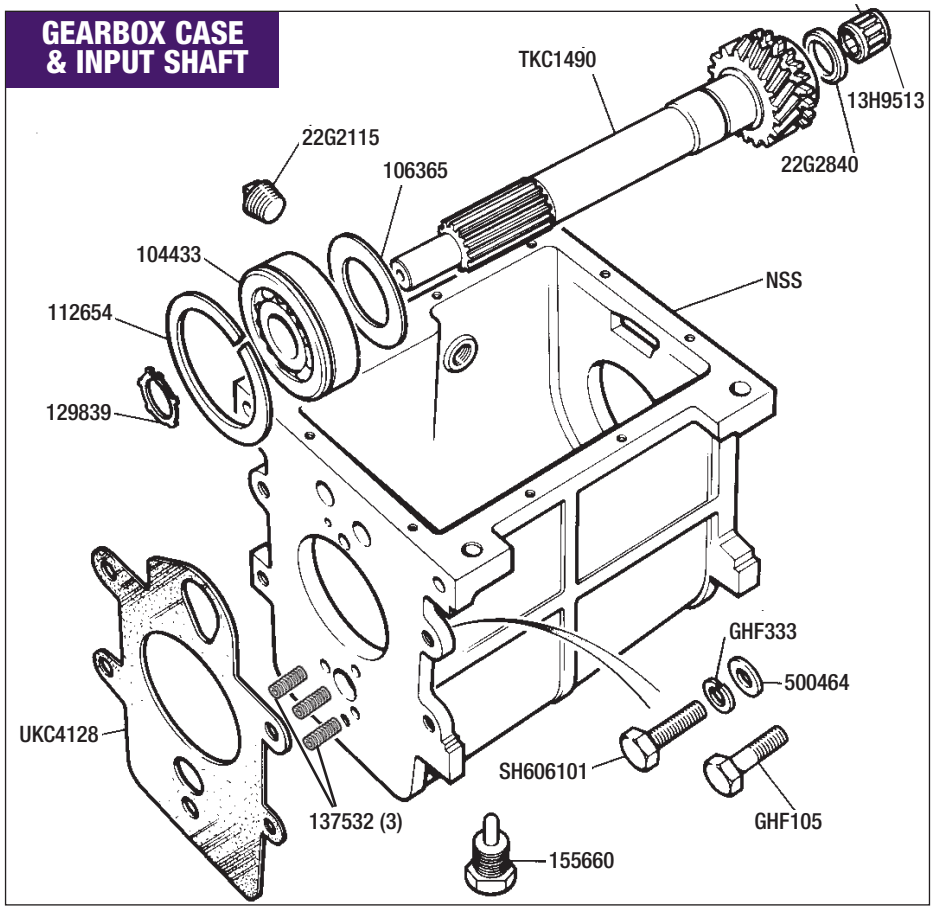

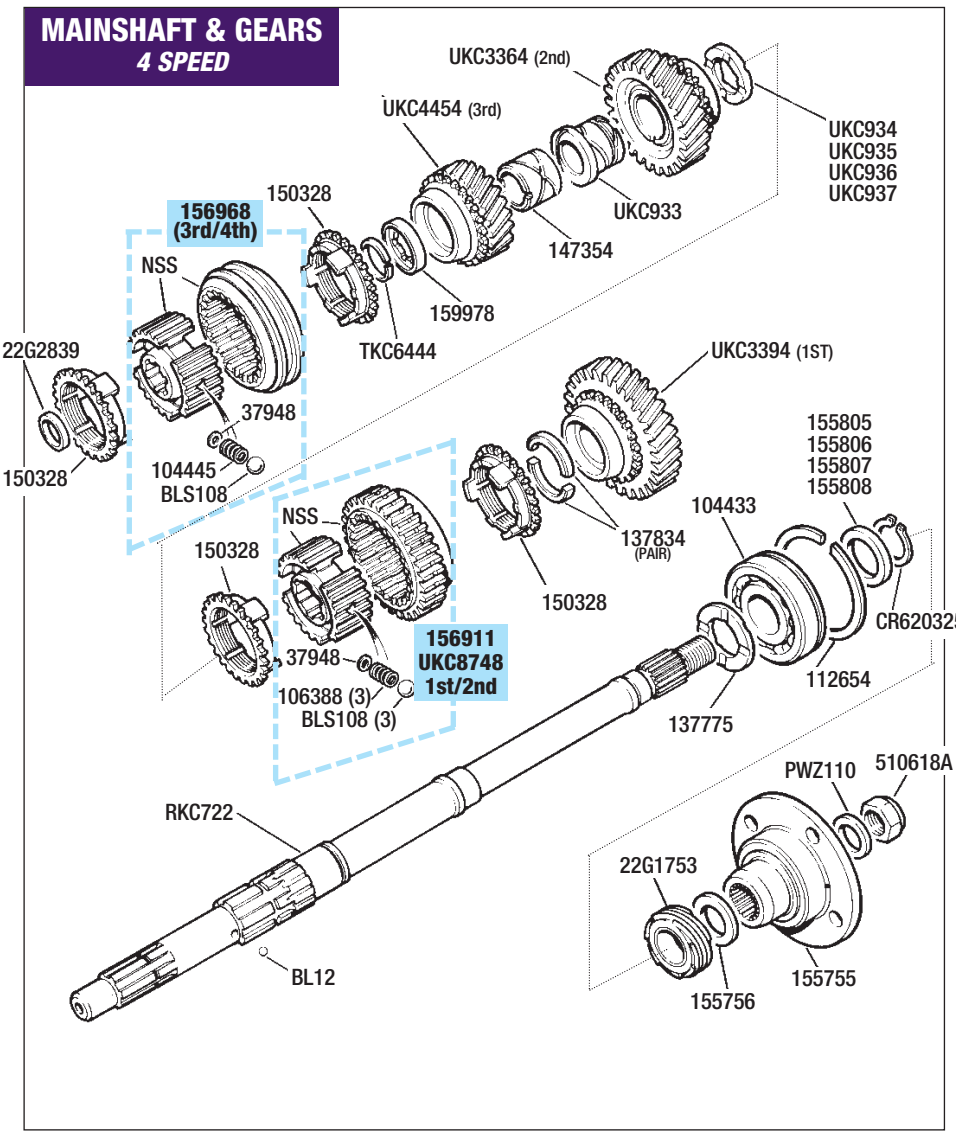

Gearbox Case & Input Shaft

4 Speed Manual

Description	Qty Req.	Part No.
Circlip *(Locates on shaft)*	(1)	129839
Snap Ring	(1)	112654
Bearing +	(1)	104433
Oil Flinger	(1)	106365
Input Shaft	(1)	TKC1490
Spacer (Internal)	(1)	22G2840
Needle Roller Bearing +	(1)	13H9513
Gasket + *Gearbox case to bellhousing.*	(1)	UKC4128
Tension Spring	(3)	137532
Setscrew *Casing to bellhousing.*	(6)	SH606101
Washer-Locking	(6)	GHF333
Washer-Flat	(6)	500464
Bolt	(1)	GHF105
Oil Filler Plug	(1)	22G2115
Oil Drain Plug (Magnetic)	(1)	155660
Unipart EP90 Gear Oil *(0.5 litre)* *Gearbox capacity - 1.1 Litre.*	(a/r)	GGL190

Mainshaft & Gears

4 Speed Manual

Description	Qty Req.	Part No.
Spacer	(1)	22G2839
Synchro Ring +	(1)	150328
Synchro Hub/Sleeve-Assembly *(3rd/4th)*	(1)	156968
Shim	(1)	37948
Spring	(3)	104445
Ball Bearing	(3)	BLS108
Synchro Ring +	(1)	150328
Circlip +	(1)	TKC6444
Spacer	(1)	159978
3rd Speed Gear	(1)	UKC4454
Bush (3rd Gear)	(1)	147354
Bush (2nd Gear)	(1)	UKC933
2nd Speed Gear	(1)	UKC3364
Thrust Washer* (0.199")	(1)	UKC934
Thrust Washer* (0.203")	(1)	UKC935
Thrust Washer* (0.205")	(1)	UKC936
Thrust Washer* (0.208") **Use as required.*	(1)	UKC937
Synchro Ring +	(1)	150328
Synchro Hub/Sleeve-Assembly *(1st/2nd);*		
To Gearbox No CG36218 *(33 teeth)*	(1)	156911
From Gearbox No CG36219 *(29 teeth)*	(1)	UKC8748
Shim	(1)	37948
Spring	(3)	106388
Ball Bearing	(3)	BLS108
Synchro Ring +	(1)	150328
Split Collar *(Pair)*	(1)	137834
1st Speed Gear	(1)	UKC3394
Mainshaft	(1)	RKC722
Ball Bearing	(1)	BL12
Thrust Washer	(1)	137775
Bearing +	(1)	104433
Snap Ring	(1)	112654
Washers *(Use as required);*		
.119"/.121" *(Natural)*	(1)	155805
.122"/.124" *(Green)*	(1)	155806
.125"/.127" *(Blue)*	(1)	155807
.128"/.130" *(Orange)*	(1)	155808
Circlip (Small) +	(1)	CR620325
Driving Gear *(Speedometer)*	(1)	22G1753
Washer	(1)	155756
Flange *(to propshaft)*	(1)	155755
Washer	(1)	PWZ110
Nut-Locking	(1)	510618A
Unipart EP90 Gear Oil *(0.5 litre)* *Gearbox capacity -1.1 Litre.*	(a/r)	GGL190

TO ORDER: 01522 568000
www.rimmerbros.co.uk

Countershaft/Reverse Gear & Operating Lever

4 Speed Manual

Description	Qty Req.	Part No.
Countershaft +	(1)	**144595**
Tension Spring	(3)	**137532**
Dowel	(1)	**DS1908**
Thrust Washer (Front) +	(1)	**113229**
Retaining Ring *4 required per laygear.*	(1)	**119891**
Needle Roller Set + *Sold in pack of 50.*	(1)	**119893**
Laygear Cluster Assembly;		
To Gearbox No CG36218	(1)	**UKC3196**
From Gearbox No CG36219	(1)	**UKC8749**
Thrust Washer *(Rear)* +	(1)	**106270**
Distance Piece *(Reverse gear)*	(1)	**22G1435**
Reverse Gear Assembly-New;		
To Gearbox No CG36218 *(21 teeth)*	(1)	**144580**
From Gearbox No CG36219 *(17 teeth)*	(1)	**UKC8750**
Reverse Gear Assembly-Recon;		
From Gearbox No CG36219 *(17 teeth)*	(1)	**UKC8750R**
Bush *(Reverse idler)*	(1)	**129862**
Spindle *(Reverse idler gear)*	(1)	**113071**
Bolt *(Reverse spindle)*	(1)	**106477**
Washer-Flat	(1)	**GHF332**
Operating Lever *(Reverse)*	(1)	**CHM63**
Pivot Pin *(Operating Lever)*	(1)	**DAM1714**
Unipart EP90 Gear Oil *(0.5 litre)* *Gearbox capacity - 1.1 Litre.*	(a/r)	**GGL190**

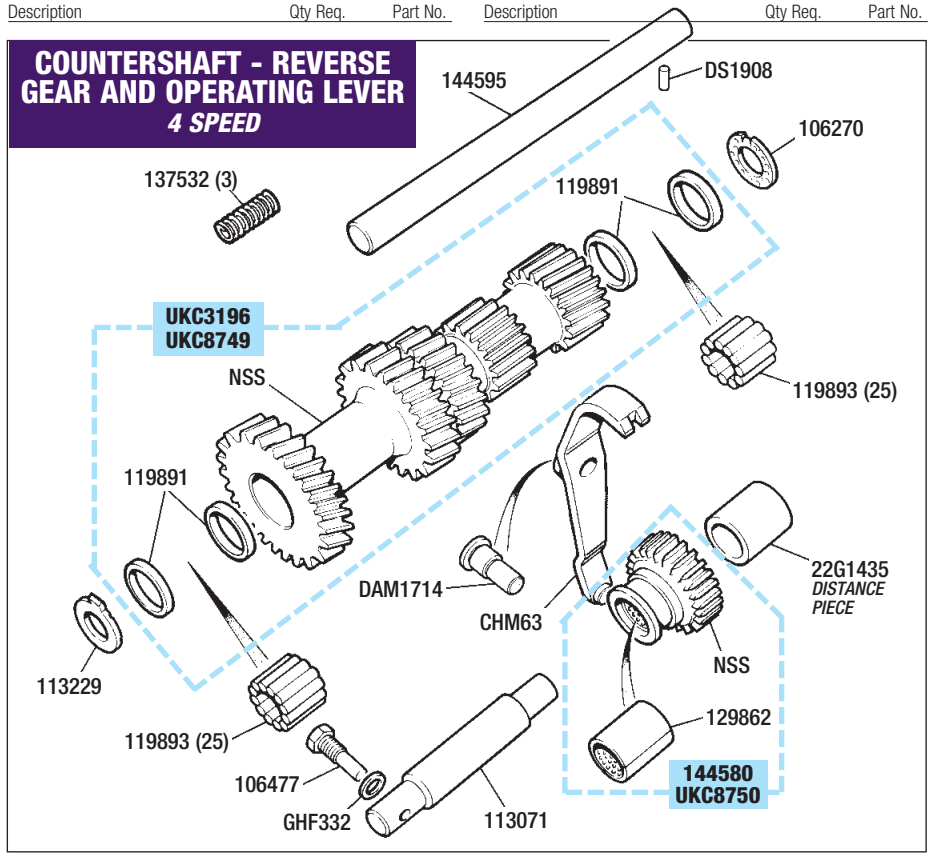

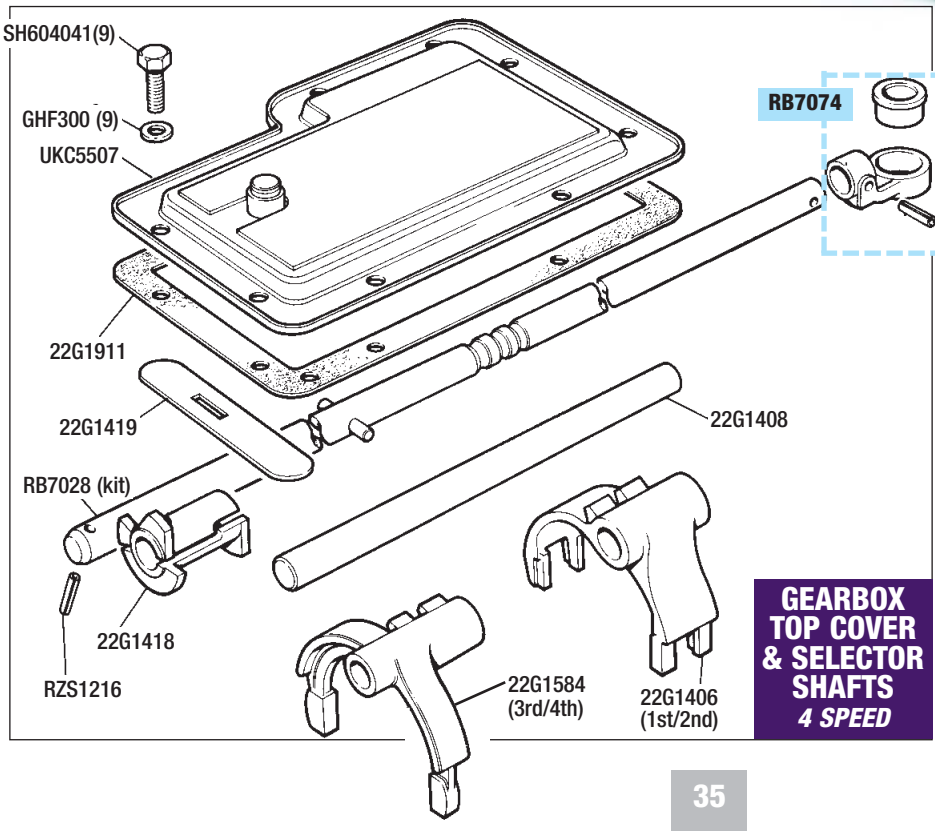

Gearbox Top Cover & Selector Shafts

4 Speed Manual

Description	Qty Req.	Part No.
Top Cover	(1)	**UKC5507**
Gasket-Top Cover +	(1)	**22G1911**
Setscrew	(9)	**SH604041**
Washer	(9)	**GHF300**
Selector Shaft Kit *Please Note; the original specification selector shaft is no longer available. Our Kit includes a replacement Selector Shaft and the corresponding Detent-Plunger for the gear lever.*	(1)	**RB7028**
Split Dowel	(1)	**RZS1216**
Interlock Spool	(1)	**22G1418**
Plate *(Interlock spool)*	(1)	**22G1419**
Bush/Seat Kit *(Gear Lever)* *Reduces gear lever 'rattle'. Kit includes bottom (gear lever) bush, yoke/eye, split dowel & snap ring.*	(1)	**RB7074**
Shaft-Selector Fork	(1)	**22G1408**
Selector Fork *(3rd/4th)*	(1)	**22G1584**
Selector Fork *(1st/2nd)*	(1)	**22G1406**
Unipart EP90 Gear Oil *(0.5 litre)* *Gearbox capacity - 1.1 Litre.*	(a/r)	**GGL190**

Rear Gearbox Extension

4 Speed Manual

*See also; **Speedo Drive & Cable and Gearbox Top Cover & Selector Shafts.***

Description	Qty Req.	Part No.
Rear Extension *(Bare)*	(1)	**BHM5061**
Gearbox Mounting	(1)	**TKC1044**
Gasket + *(Extension to case)*	(1)	**22G1420**
Setscrew *(Extension to case)*	(6)	**GHF103**
See TECHNICAL JOTTINGS - Gearbox Re-fitting.		
Washer-Spring	(6)	**GHF332**
Bolt *(Extension to case)*	(2)	**GHF103**
See TECHNICAL JOTTINGS - Gearbox Re-fitting.		
Spring	(1)	**22G2198**
Detent/Plunger	(1)	**22G1421**
Cap *(Retaining)*	(1)	**22G1947**
'O' Ring/Seal *(Selector shaft)*	(1)	**TRS912**
Selector Shaft Kit	(1)	**RB7028**
Please Note; the original specification selector shaft is no longer available. Our Kit includes a replacement Selector Shaft and the corresponding Detent-Plunger for the gear lever.		
Gaiter *(Selector Shaft)*	(1)	**UKC8875**
Bush/Seat Kit *(Gear Lever)*	(1)	**RB7074**
Reduces gear lever 'rattle'. Kit includes bottom (gear lever) bush, yoke/eye, split dowel & snap ring.		
Speedometer Cable	(1)	**GSD287**
Speedo Drive Pinion	(1)	**219004**
23 teeth, colour code-Black.		
'O' Ring/Seal	(1)	**TRS1620**
Housing/Bearing *(Speedo drive pinion)*	(1)	**22G1486**
Oil Seal *(Speedo drive pinion)*	(1)	**NKC105A**
Retaining Plate	(1)	**22G1711**
Setscrew *(for 22G1711)*	(1)	**GHF117**
Washer-Spring	(1)	**GHF331**
Washer-Plain	(1)	**WC701121**
Reverse Light Switch;		
To Gearbox No CG53386	(1)	**GAE191**
From Gearbox No CG53387	(1)	**UKC9224**
Washer	(1)	**GHF302**
Pin *(Gearlever Retaining)*	(1)	**22G2277**
Pin *(Gearlever Retaining)*	(1)	**DAM2670**
Lift Plate *(Reverse)*	(1)	**22G1425**
Setscrew	(1)	**GHF117**
Washer-Spring	(1)	**GHF331**
End Plate	(1)	**22G1422**
Bearing +	(1)	**157732**
Oil Seal +	(1)	**88G564**
Unipart EP90 Gear Oil *(0.5 litre)*	(a/r)	**GGL190**
Gearbox capacity - 1.1 Litre.		

Gearchange Lever

4 Speed Manual

Description	Qty Req.	Part No.
Gear Lever	(1)	**UKC3248**
Gear Knob	(1)	**UKC2793**
Nut-Locking	(1)	**NT605041**
Retaining Cup *(Gear lever)*	(1)	**22G1434**
Spring *(Anti-rattle)*	(1)	**106388**
Plunger *(Anti-rattle)*	(1)	**22G2286**
Use only with original selector shaft.		
***Please Note;** if you need to fit a new Selector Shaft, then you will need to use our Selector Shaft Kit.*		
Selector Shaft Kit	(1)	**RB7028**
Please Note; the original specification selector shaft is no longer available. Our Kit includes a replacement Selector Shaft and the corresponding Detent-Plunger for the gear lever.		
Bush/Seat Kit *(Gear Lever)*	(1)	**RB7074**
Reduces gear lever 'rattle'. Kit includes bottom (gear lever) bush, yoke/eye, split dowel & snap ring.		
Retaining Plate *(Gaiter)*	(1)	**ZKC1342**
Gaiter *(Rubber)*	(1)	**YKC1453**
Screw-Self Tapping	(5)	**YH7406**
Washer	(5)	**WP20X**
Spire Clip	(5)	**GHF712**
Nut	(1)	**570779**
Insulation Pad	(1)	**ZKC2526**
Plate-Aperture	(1)	**YKC330**

REAR GEARBOX EXTENSION

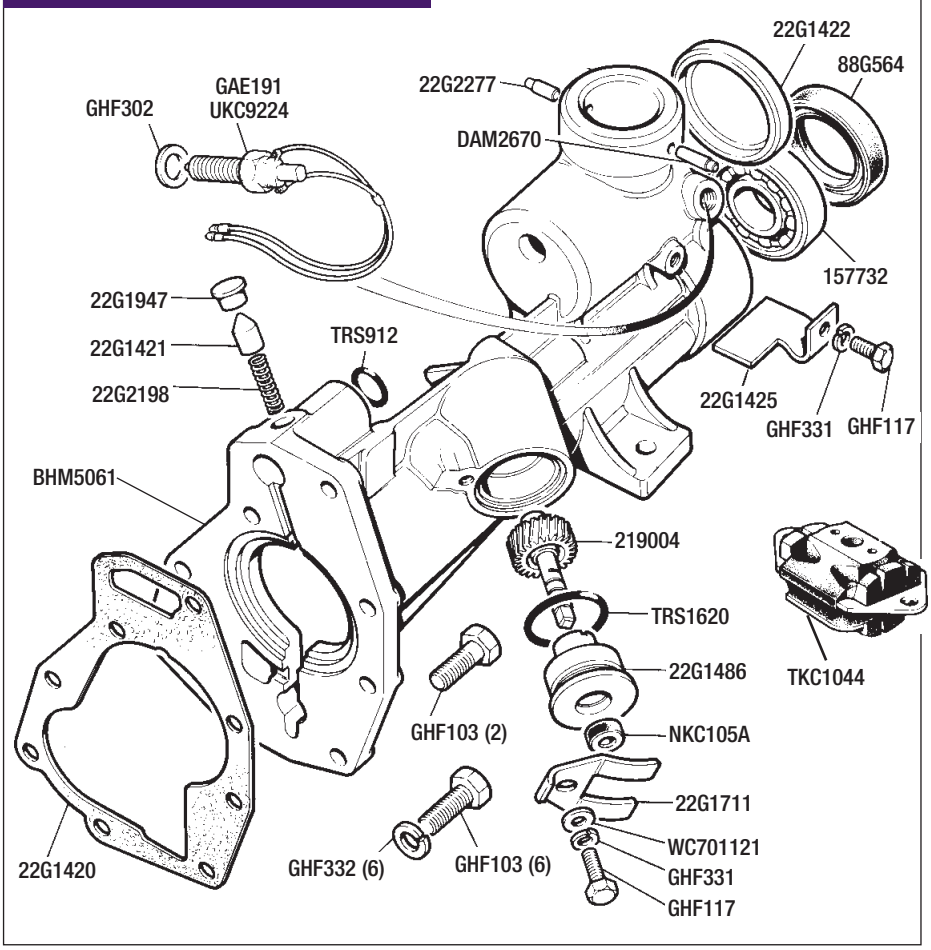

TECHNICAL JOTTINGS

4 Speed Gearbox & Re-fitting the Rear Casing

Ensure the correct length bolts/setscrews are used when either mating the rear extension to the main casing, or when fitting the exhaust hanger bracket. If the bolts/setscrews are too long it may result in them protruding and fouling the internals.

GEARCHANGE LEVER
4 SPEED

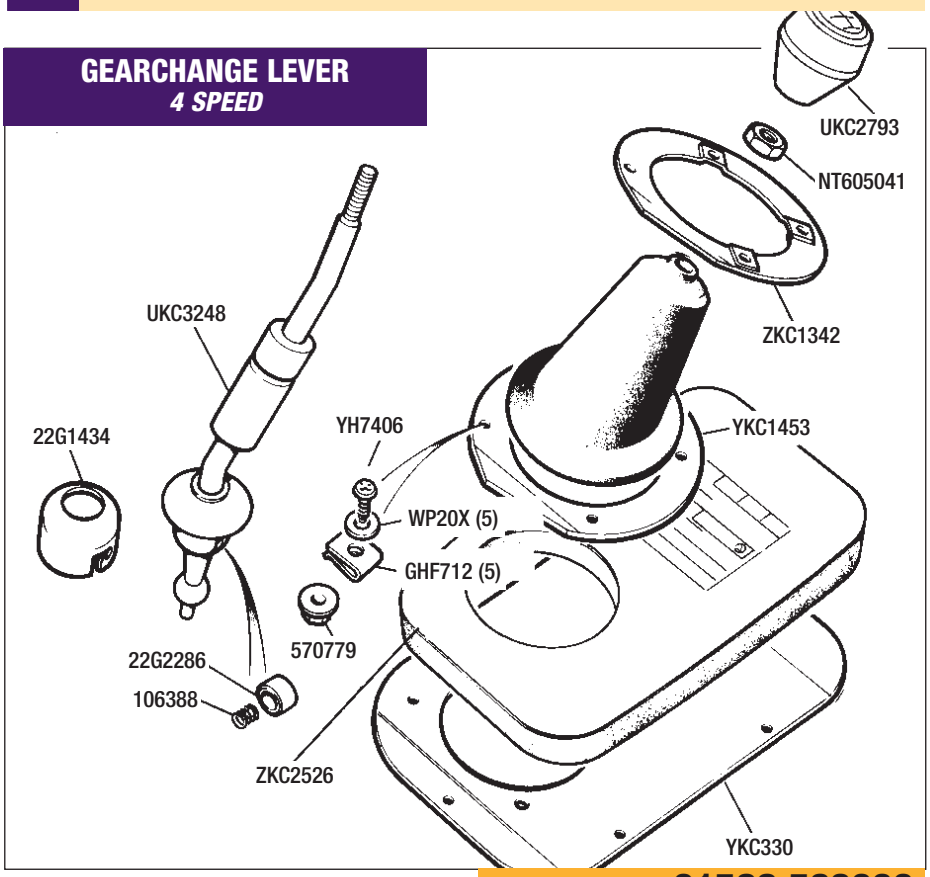

TO ORDER: 01522 568000
www.rimmerbros.co.uk

5 SPEED GEARBOX

TECHNICAL JOTTINGS & RELATED COMPONENT

5 Speed Gearbox - Re-builds!

The 5 speed gearbox requires specialist tools & knowledge to dismantle and re-build, and it is normally beyond the ability of the DIY enthusiast, we therefore recommend the fitting of an exchange Gearbox unit. However, we have listed and illustrated the 5 speed gearbox components should you wish to re-build your own gearbox.
If you require further assistance, please contact us with your gearbox number.

If you are installing a Gearbox to your car you may also require the following item; Gearbox Mounting (TKC1044).
It is also worth checking the condition of the Clutch Cover, Clutch Plate & Release Bearing.

5 SPEED RECONDITIONED GEARBOX

Manual Gearbox

5 Speed Manual

Description	Qty Req.	Part No.
Gearbox (5 Speed);		
Note; *Gearbox is supplied Less bellhousing, speedo pinion & gearchange remote assembly.*		
New	(1)	**UKC9076**
Reconditioned	(1)	**UKC9076R**
Heavy Duty *(Reconditioned)*	(1)	**UKC9076R/HD**
TR8 specification, but may also be used on TR7.		
Gearbox Mounting	(1)	**TKC1044**
Unipart Gear Oil (ATF) *(0.5 Litre)*	(a/r)	**GGL175**
Gearbox capacity - 1.5 Litre.		

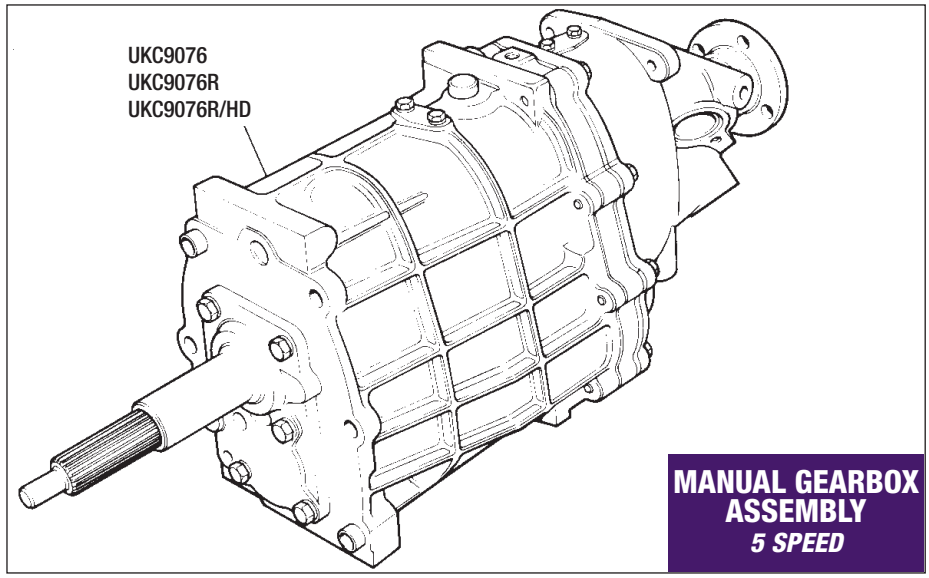

MANUAL GEARBOX ASSEMBLY
5 SPEED

Clutch Housing/Operation

5 Speed Manual

See also; ***ENGINE & CLUTCH - Clutch Pedal & Mounting*** *and* ***Gearbox Case-Front Cover.***

Description	Qty Req.	Part No.
Bellhousing	(1)	**RKC614**
Setscrew	(4)	**SH112301**
Bellhousing to gearbox.		
Washer-Spring	(4)	**WL112001**
Bolt	(2)	**BH112091**
Bellhousing to gearbox.		
Washer-Spring	(2)	**WL112001**
Washer-Flat	(2)	**WA112081**
Dowel	(2)	**UKC25**
Bellhousing to gearbox.		
Clutch Operating Lever**	(1)	**LBU1234**
Slipper Pad	(2)	**159003**
Clip *(Clutch arm to slave cyl push rod)*	(1)	**UKC1806**
Carrier/Sleeve**	(1)	**FRC5369A**
Clutch release bearing carrier.		
***NOTE; on early vehicles LBU1234 and FRC5369 MUST be fitted as a pair.*		
Clutch Release Bearing	(1)	**GRB209**
Fulcrum Pin *(Clutch operating lever)*	(1)	**UKC1774**
Bolt	(4)	**GHF121**
Washer-Spring	(4)	**GHF332**
Nut	(4)	**GHF201**
Washer-Shakeproof	(1)	**90510912A**
Bolt	(1)	**BH605141**
Dowel	(1)	**DP619**
Nut	(2)	**GHF201**
Washer-Spring	(2)	**GHF332**
Washer-Plain	(2)	**GHF301**
Bolt	(2)	**GHF121**
Washer-Spring	(2)	**GHF332**
Bolt	(3)	**GHF104**
Washer-Spring	(3)	**GHF332**
Setscrew	(2)	**SH110201**
Washer-Spring	(2)	**WL110001**
Washer-Plain	(2)	**GHF302**
Bolt (Special)	(1)	**ULC1372**
Washer-Locking	(1)	**GHF333**
Nut	(2)	**GHF202**

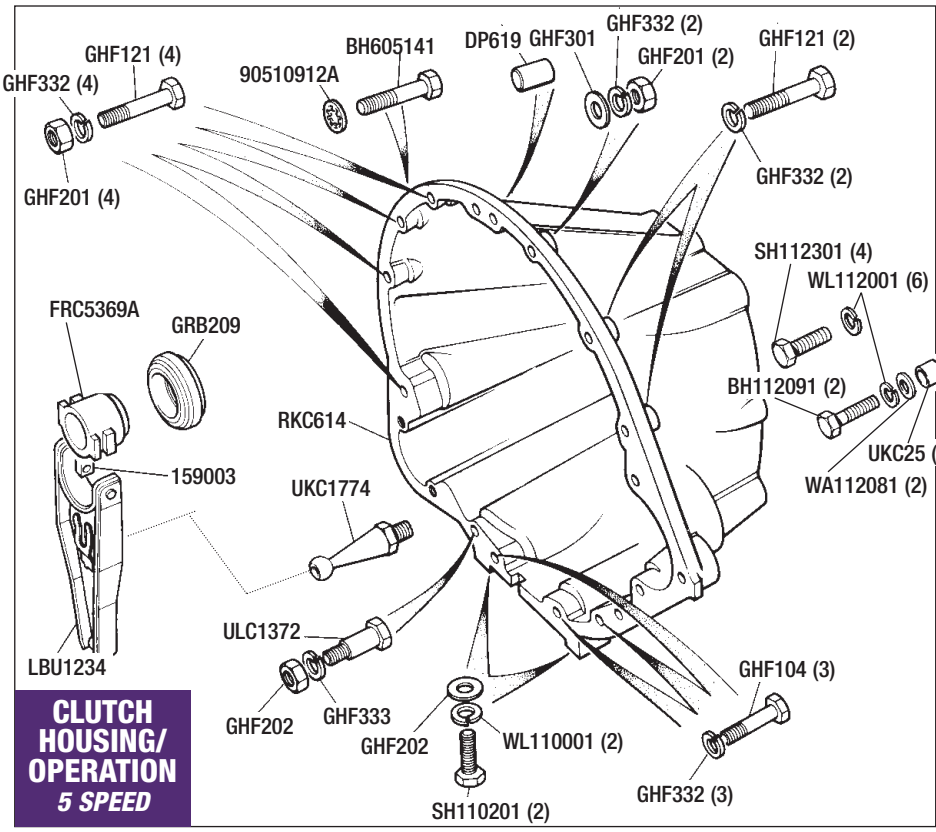

CLUTCH HOUSING/ OPERATION
5 SPEED

Description	Qty Req.	Part No.

Speedo Cable & Drive

5 Speed Manual.
Not illustrated.
See also; ***Gearbox Case-Rear Extension.***

Speedometer Cable;		
To VIN 402026	(1)	**GSD287**
From VIN 402027	(1)	**GSD388**
1981 models on. With push button trip reset		
Speedo Drive Pinion;		
23 Teeth *(Colour code-Black)*	(1)	**219004**
Used with axle ratio 3.90:1.		
21 Teeth *(Colour code-Green)*	(1)	**219002A**
Used with axle ratio 3.45:1.		
'O' Ring/Seal	(1)	**TRS1620**
Housing/Bearing	(1)	**22G1486**
Speedo drive pinion.		
Oil Seal *(Speedo drive pinion)*	(1)	**NKC105A**

Gearbox Case-Front Cover

5 Speed Manual

Front Cover Assembly;		
Note; covers differ due to different size input shaft front bearings, and corresponding oil seal.		
To Gearbox No CL22476C	(1)	**UKC166**
From Gearbox No CL22477C	(1)	**ULC1283**
Oil Seal;		
To Gearbox No CL22476C	(1)	**UKC12**
From Gearbox NoCL22477C	(1)	**UKC1060**
Setscrew	(6)	**GHF133**
Washer-Spring	(6)	**GHF301**
Gasket *(All ranges)*	(1)	**ULC1284**
(1) Selective Washer	(1)	*(See separate Panel)*
For Input shaft, to Gearbox No CL22476C.		
(2) Selective Washer	(1)	*(See separate Panel)*
For Input shaft, from Gearbox No CL22477C.		
Bearing *(Front of Input shaft);*		
To Gearbox No CL22476C	(1)	**UKC169**
From Gearbox No CL22477C	(1)	**ULC2445**
Unipart Gear Oil (ATF) *(0.5 Litre)*	(a/r)	**GGL175**
Gearbox capacity - 1.5 Litre.		

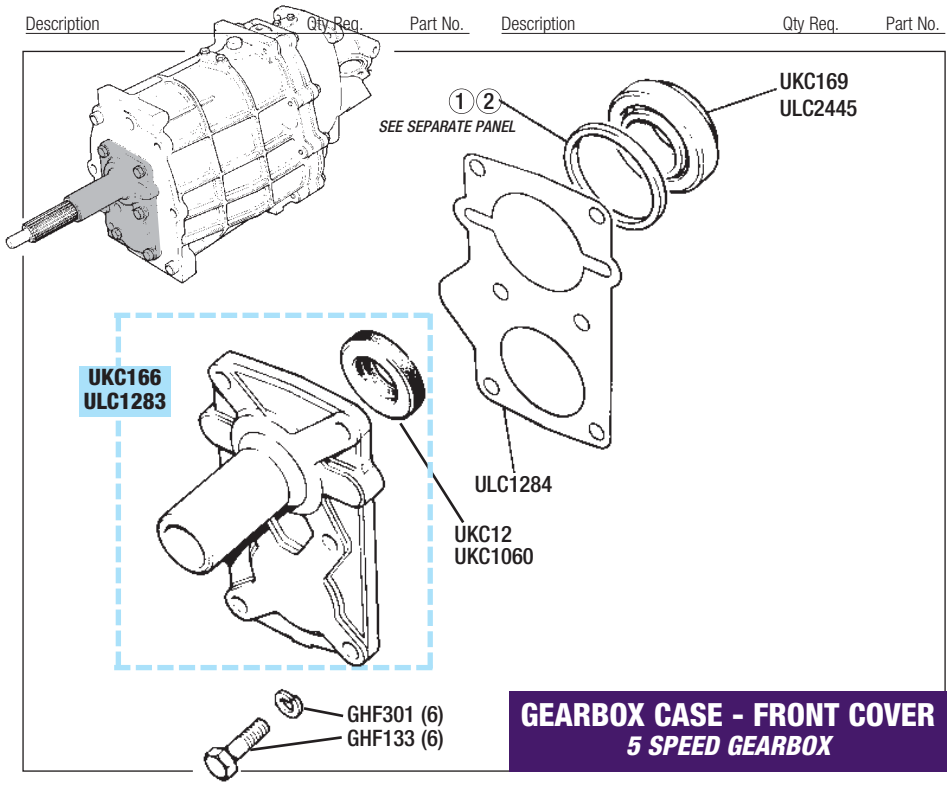

GEARBOX CASE - FRONT COVER
5 SPEED GEARBOX

(1) SELECTIVE WASHERS TO GEARBOX CL22476C
(Thickness in mm shown in brackets)

UKC9081 (1.39)	UKC8468 (1.75)	UKC8480 (2.11)	UKC8492 (2.47)
UKC9083 (1.45)	UKC8470 (1.81)	UKC8482 (2.17)	TKC4613 (2.53)
UKC9085 (1.51)	UKC8472 (1.87)	UKC8484 (2.23)	UKC8496 (2.59)
UKC9087 (1.57)	TKC4593 (1.93)	UKC8486 (2.29)	
UKC9089 (1.63)	UKC8476 (1.99)	TKC4607 (2.35)	
UKC8466 (1.69)	UKC8478 (2.05)	UKC8490 (2.41)	

(2) SELECTIVE WASHERS FROM GEARBOX CL22477C
(Thickness in mm shown in brackets)

TKC4843 (1.57)	TKC4855 (1.93)	TKC4867 (2.29)	TKC4879 (2.65)
TKC4845 (1.63)	TKC4857 (1.99)	TKC4869 (2.35)	TKC4881 (2.71)
TKC4847 (1.69)	TKC4859 (2.05)	TKC4871 (2.41)	TKC4883 (2.77)
TKC4849 (1.75)	TKC4861 (2.11)	TKC4873 (2.47)	
TKC4851 (1.81)	TKC4863 (2.17)	TKC4875 (2.53)	
TKC4853 (1.87)	TKC4865 (2.23)	TKC4877 (2.59)	

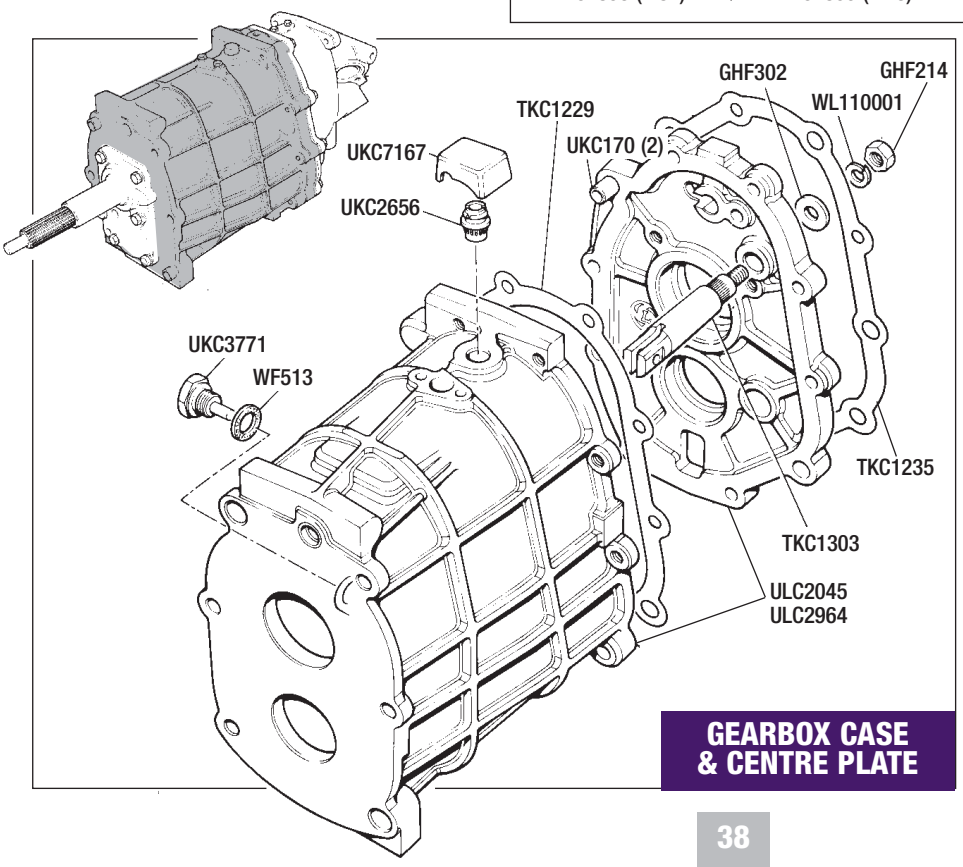

GEARBOX CASE & CENTRE PLATE

Gearbox Case & Centre Plate

5 Speed Manual

Gearbox Case & Centre Plate;		
Note; cases differ due to different size input shaft front bearing.		
To Gearbox No CL22476C	(1)	**ULC2045**
From Gearbox No CL22477C	(1)	**ULC2964**
Breather	(1)	**UKC2656**
Cap *(Breather)*	(1)	**UKC7167**
Oil Filler Plug *(Magnetic)*	(1)	**UKC3771**
Fibre Washer	(1)	**WF513**
Gasket *(Casing to centre plate)*	(1)	**TKC1229**
Dowel	(1)	**UKC170**
Pin *(Reverse lever mounting)*	(1)	**TKC1303**
Washer-Flat *(for TKC1303)*	(1)	**GHF302**
Washer-Spring *(for TKC1303)*	(1)	**WL110001**
Nut *(for TKC1303)*	(1)	**GHF214**
Gasket	(1)	**TKC1235**
Centre plate to rear extension.		
Unipart Gear Oil (ATF) *(0.5 Litre)*	(NI)	**GGL175**
Gearbox capacity - 1.5 Litre.		

TO ORDER: 01522 568000
www.rimmerbros.co.uk

Gearbox Case-Rear Extension & Speedo Drive

5 Speed Manual

Description	Qty Req.	Part No.
Extension Case & Pump	(1)	**TKC1320**
Gasket	(1)	**TKC1235**
Rear extension to centre plate.		
Oil Pipe	(1)	**FRC7572A**
Body *(Gearbox oil pump)*	(1)	**TKC1266**
Setscrew *(for TKC1266)*	(3)	**SH106201**
Washer-Spring	(3)	**WL106001**
Oil Pump Kit *(Gears)*	(1)	**RTC2057A**
Oil Feed Ring	(1)	**UKC2072**
'O' Ring *(Gear selection shaft)*	(1)	**UKC7**
Oil Drain Plug	(1)	**UKC26**
Washer	(1)	**WF513**
Speedometer Cable;		
To VIN 402026	(1)	**GSD287**
From VIN 402027 *(1981 models on)*	(1)	**GSD388**
Speedo Drive Pinion;		
23 Teeth *(Colour code-Black)*	(1)	**219004**
Used with axle ratio 3.90:1.		
21 Teeth *(Colour code-Green)*	(1)	**219002A**
Used with axle ratio 3.45:1.		
'O' Ring/Seal	(1)	**TRS1620**
Housing/Bearing *(Speedo drive pinion)*	(1)	**22G1486**
Oil Seal *(Speedo drive pinion)*	(1)	**NKC105A**
Retaining Plate	(1)	**22G1711**
Setscrew *(for 22G1711)*	(1)	**SH106201**
Washer-Spring	(1)	**GHF331**
Washer-Plain	(1)	**GHF300**
Bolt*	(8)	**BH108101**
Bolt*	(2)	**BH108111**
Washer-Spring*	(10)	**GHF382**
*Rear extension to centre plate.		
Bolt	(2)	**GHF134**
Washer *(Special)*	(2)	**GHF312**
Spacer	(2)	**UKC68**
Bush		
Standard	(4)	**UKC854**
Poly	(4)	**UKC854P**
Mounting Bracket	(1)	**UKC3145**
Setscrew	(2)	**SH108201**
Washer-Spring	(2)	**GHF382**
Bolt	(2)	**FB108061**
Washer *(Special)*	(2)	**UKC1088**
Spacer	(2)	**UKC1091**
Bush		
Standard	(4)	**UKC854**
Poly	(4)	**UKC854P**
Washer (Special)	(2)	**UKC1090**
Unipart Gear Oil (ATF) *(0.5 Litre)*	(a/r)	**GGL175**
Gearbox capacity - 1.5 Litre.		

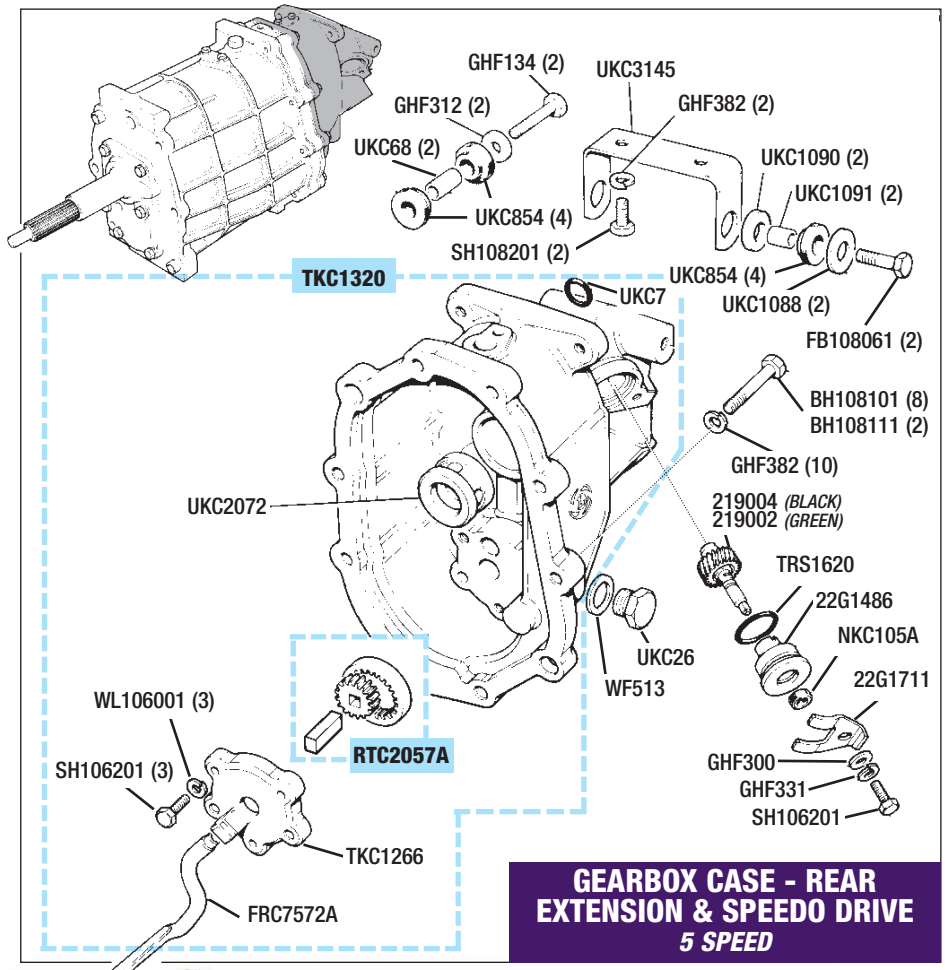

GEARBOX CASE - REAR EXTENSION & SPEEDO DRIVE
5 SPEED

Input Shaft & Mainshaft

5 Speed Manual

Description	Qty Req.	Part No.
Input Shaft;		
Note; input shafts differ due to different size front bearing.		
To Gearbox No CL22476C	(1)	**TKC3533**
From Gearbox No CL22477C	(1)	**RKC4168**
Bearing *(Rear of input shaft)*	(1)	**GHB107**
Bearing *(Front of Input shaft);*		
To Gearbox No CL22476C	(1)	**UKC169**
From Gearbox No CL22477C	(1)	**ULC2445**
Spacer *(Synchro hub/bearing)*	(1)	**UKC37**
Synchro Hub/Sleeve-Assembly (3rd/4th)	(1)	**UKC5843**
Also available less synchro rings.		
Synchro Ring	(1)	**FRC8232**
Spring	(2)	**UKC31**
Shifting Plate	(3)	**UKC3530**
Synchro Ring	(1)	**FRC8232**
3rd Speed Gear	(1)	**TKC268**
Mainshaft	(1)	**TKC3111**
Unipart Gear Oil (ATF) *(0.5 Litre)*	(a/r)	**GGL175**
Gearbox capacity - 1.5 Litre.		

INPUT SHAFT & MAINSHAFT
5 SPEED

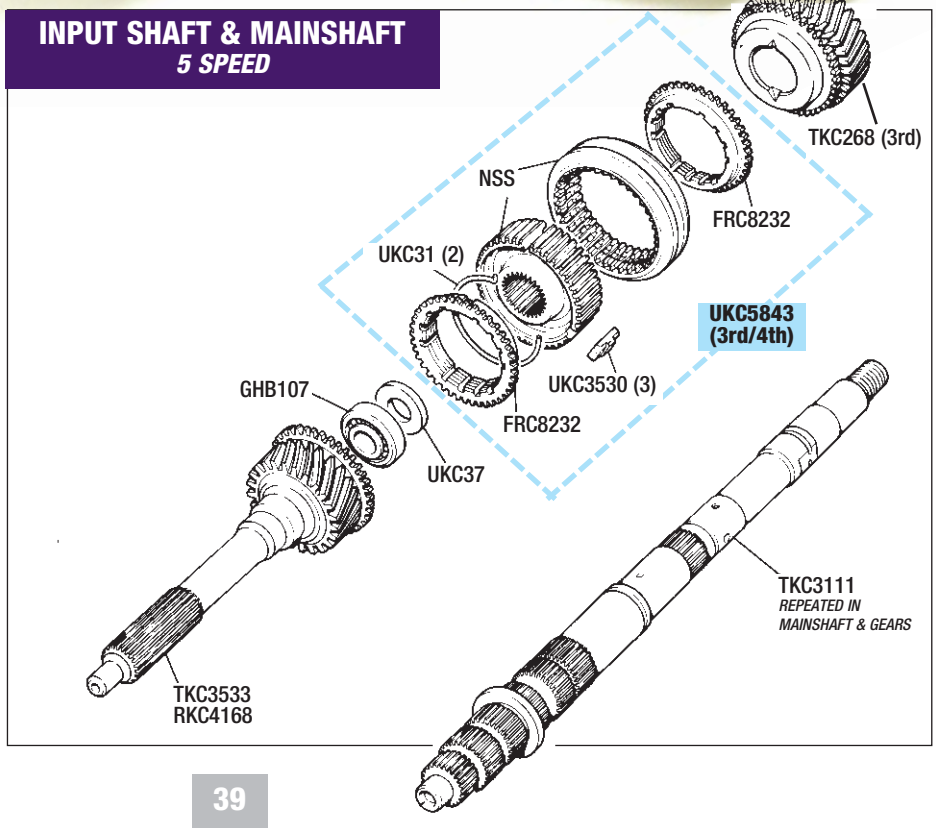

Mainshaft Gears

5 Speed Manual

Description	Qty Req.	Part No.
Mainshaft	(1)	**TKC3111**
2nd Speed Gear	(1)	**TKC267**
Synchro Hub/Sleeve-Assembly *1st/2nd*	(1)	**UKC5850**
Synchro Ring	(1)	**FRC8232**
Spring	(2)	**UKC31**
Shifting Plate	(3)	**UKC3531**
Synchro Ring	(1)	**FRC8232**
1st Speed Gear	(1)	**TKC735**
Bush (1st Speed Gear); *(Use as required (mm)*		
(39.96/40.00) *(mm)*	(1)	**TKC1477**
(40.01/40.05) *(mm)*	(1)	**TKC1478**
(40.06/40.10) *(mm)*	(1)	**TKC1479**
(40.11/40.15) *(mm)*	(1)	**TKC1480**
(40.16/40.20) *(mm)*	(1)	**TKC1481**
Bearing *(Mainshaft front)*	(1)	**UKC169**
Circlip	(1)	**58956**
Collar *(5th Speed Gear)*	(1)	**UKC3336**
Needle Roller Bearing	(2)	**UKC2663**
5th Speed Gear;		
To VIN 402027	(1)	**TKC1195**
From VIN 402028	(1)	**RKC5098**
Synchro Hub/Sleeve-Assembly *(5th)*	(1)	**UKC5844**
Synchro Ring	(1)	**FRC8232**
Spring	(2)	**UKC31**
Shifting Plate	(3)	**UKC3530**
Support Plate *(Synchro Hub)*	(1)	**UKC3909**
3) Synchro Washer		*(See separate Panel)*
Circlip	(1)	**UKC6540**
Speedo Driving Gear *(White)* *Speedo worm drive.*	(1)	**TKC1273**
Abutment Washer	(1)	**UKC7252**
Bearing Assembly *(Mainshaft rear)*	(1)	**533360A**
Oil Seal	(1)	**UKC3949**
Flange *(to propshaft)*	(1)	**TKC1676**
Washer	(1)	**UKC8120**
Nut-Locking	(1)	**UKC6797**
Unipart Gear Oil (ATF) *(0.5 Litre)* *Gearbox capacity - 1.5 Litre.*	(1)	**GGL175**

(3) SYNCHRO WASHERS

(Thickness in mm shown in brackets)

UKC8996 (5.10)	UKC9002(5.28)	UKC9008 (5.46)	UKC9014 (5.64)
UKC8998 (5.16)	UKC9004 (5.34)	UKC9010 (5.52)	
UKC9000 (5.22)	UKC9006 (5.40)	UKC9012 (5.58)	

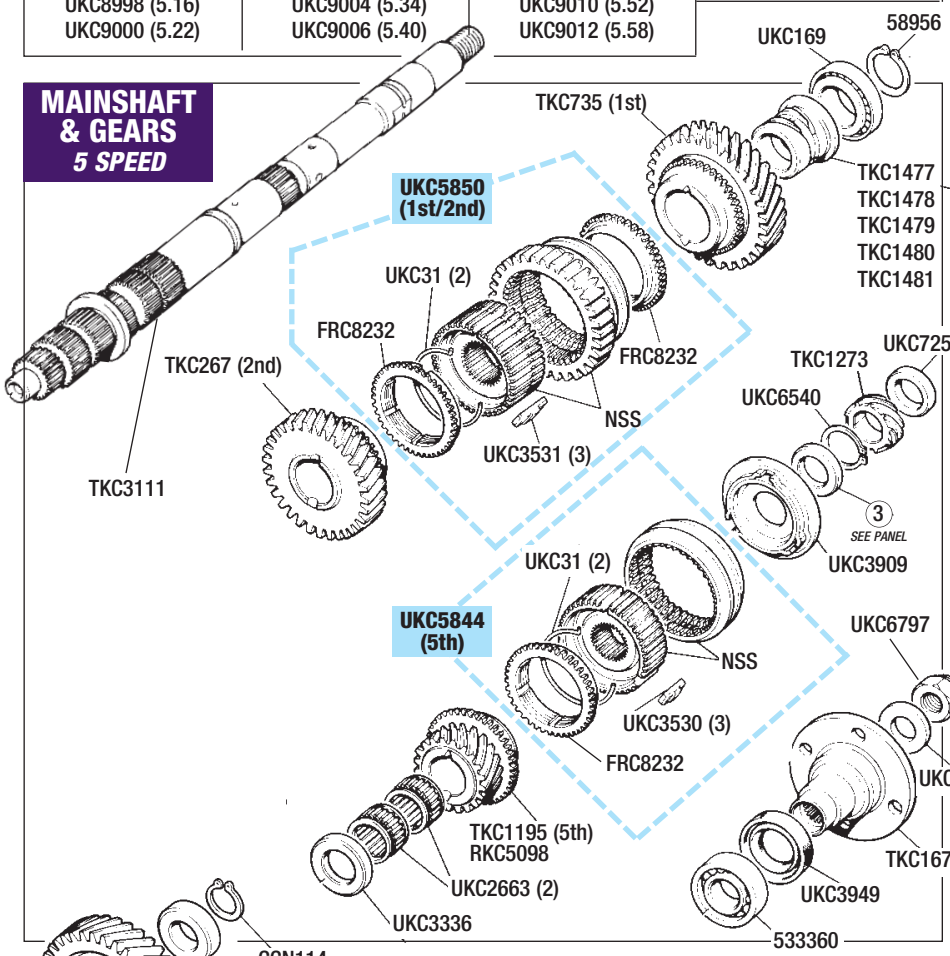

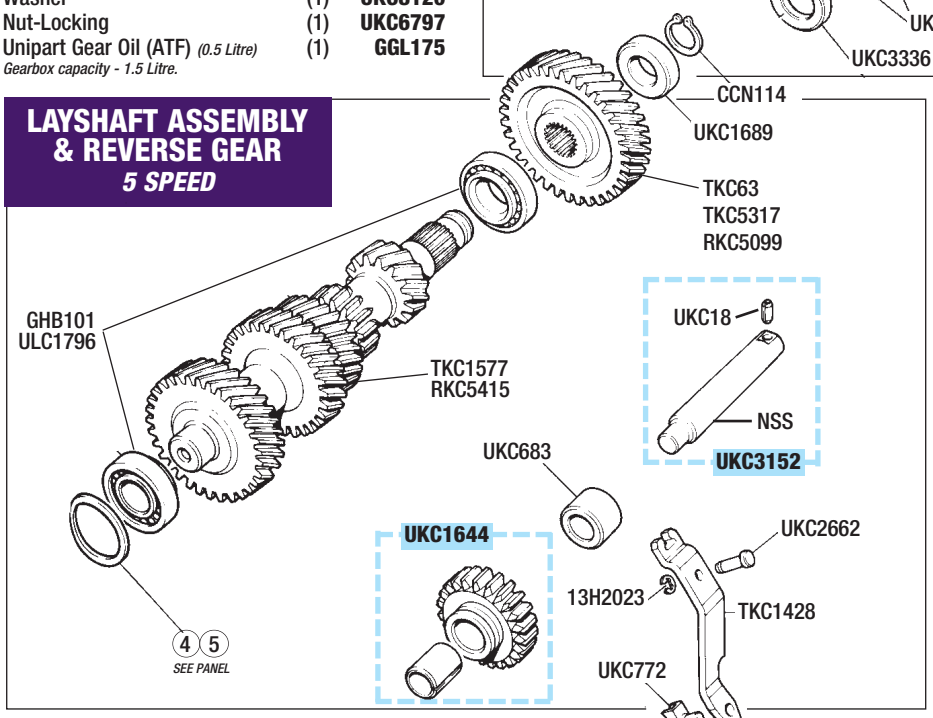

LayshaftAssembly & Reverse Gear

5 Speed Manual

Description	Qty Req.	Part No.
Layshaft Service Kit	(1)	**RTC2562**
*This Factory kit replaces TKC1577 if unavailable. Includes; Laygear cluster (RKC5415), 2 bearings (ULC1796) & 5th speed gear (TKC5317). **NB;** if fitting this service kit to vehicles from VIN 402028 onwards, you need to replace 5th gear (RKC5098) on mainshaft with the early type TKC1195.*		
Layshaft Gear Cluster;		
To Gearbox No CL45500C*	(1)	**TKC1577**
**Can be replaced by using Layshaft service kit RTC2562, as listed above.*		
From Gearbox No CL45501C	(1)	**RKC5415**
RKC5415 is included in layshaft service kit RTC2562.		
Bearing *(Laygear);*		
To Gearbox No CL45500C	(2)	**GHB101**
From Gearbox No CL45501C	(2)	**ULC1796**
2 ULC1796 bearings are included in layshaft service kit RTC2562.		
Layshaft Gear (5th Speed);		
To Gearbox No CL45500C	(1)	**TKC63**
If TKC63 is no longer available, use layshaft service kit RTC2562.		
From G/box CL45501C to VIN 402027		**TKC5317**
TKC5317 is included in layshaft service kit RTC2562.		
From VIN 402028	(1)	**RKC5099**
Washer	(1)	**UKC1689**
Circlip	(1)	**CCN114**
4) Selective Washer *For Layshaft, to gearbox CL22476C*		*(See separate Panel)*
5) Selective Washer *For Layshaft, from gearbox CL22477C*		*(See separate Panel)*
Reverse Idler Gear & Bush	(1)	**UKC1644**
Spacer *(Reverse Idler)*	(1)	**UKC683**
Shaft & Pin Assembly	(1)	**UKC3152**
Dowel *(for UKC3152)*	(1)	**UKC18**
Operating Lever *(Reverse gear)*	(1)	**TKC1428**
Pivot Pin *(for TKC1428)*	(1)	**UKC2662**
Circlip *(for TKC1428)*	(1)	**13H2023**
Slipper Pad *(for TKC1428)*	(1)	**UKC772**
Unipart Gear Oil (ATF) *(0.5 Litre)* *Gearbox capacity - 1.5 Litre.*	(a/r)	**GGL175**

(4) SELECTIVE WASHERS TO GEARBOX CL22476C

(Thickness in mm shown in brackets)

UKC8499 (1.69)	UKC8507 (1.93)	UKC8515 (2.17)	UKC9424 (2.41)
UKC8501 (1.75)	UKC8509 (1.99)	UKC8517 (2.23)	UKC9426 (2.47)
UKC8503 (1.81)	UKC8511 (2.05)	UKC9420 (2.29)	
UKC8505 (1.87)	UKC8513 (2.11)	UKC9422 (2.35)	

(5) SELECTIVE WASHERS FROM GEARBOX CL22477C

(Thickness in mm shown in brackets)

TKC4633 (1.69)	TKC4641 (1.93)	TKC4649 (2.17)	TKC4657 (2.41)
TKC4635 (1.75)	TKC4643 (1.99)	TKC4651 (2.23)	TKC4659 (2.47)
TKC4637 (1.81)	TKC4645 (2.05)	TKC4653 (2.29)	TKC4661 (2.53)
TKC4639 (1.87)	TKC4647 (2.11)	TKC4655 (2.35)	TKC4663 (2.59)

TO ORDER: *ring* **01522 568000**
or online **www.rimmerbros.co.uk**

Gear Selectors & Shafts

5 Speed Manual

Description	Qty Req.	Part No.
'Ball' *(Gear lever seating)*	(1)	**42H1112**
Seat/Bush-Gear Lever	(1)	**UKC9338**
Yoke *(Gear lever to shaft)*	(1)	**UKC3011**
Circlip	(1)	**13H6762**
Screw *(Yoke to shaft)*	(1)	**FRC7018**
Shaft	(1)	**TKC2210**
Circlip	(1)	**13H6762**
Seat/Bush *(Shaft to selector)*	(1)	**UKC9338**
'Ball' *(Shaft to selector)*	(1)	**42H1112**
Pin *(Shaft to selector)* *Locates to nut UKC4293.*	(1)	**UKC5377**
Selector Shaft & Fork-Assembly (1st/2nd);		
To Gearbox No CL22476C	(1)	**TKC2664**
From Gearbox No CL22477C	(1)	**TKC4010**
Selector Fork only (1st/2nd)	(1)	**TKC1633**
Nut (Locking)	(1)	**NT108041**
Circlip	(1)	**UKC73**
'Ball'	(1)	**BLS112**
Spring	(1)	**FRC7195A**
Plug *(Threaded)*	(1)	**UKC75**
Selector Fork (3rd/4th)	(1)	**TKC1634**
Interlock Spool (3rd/4th)	(1)	**TKC290**
Retaining Plate *(For TKC290)*	(1)	**UKC3660**
Washer-Spring	(2)	**WL106001**
Setscrew	(2)	**SH106161**
Selector Fork Assembly (5th)	(1)	**RTC2058**
Pivot Pin	(2)	**UKC2089**
Circlip	(2)	**UKC2105**
Pad	(1)	**532943**
Setscrew	(2)	**GHF133**
Washer-Spring	(2)	**GHF382**
Interlock Spool (5th)	(1)	**TKC1413**
Retaining Plate *(For TKC1413)*	(1)	**UKC3696**
Washer-Spring	(2)	**WL106001**
Setscrew	(2)	**SH106161**

Gearchange Lever

5 Speed Manual

Description	Qty Req.	Part No.
Gaiter-Rubber *(Gear lever)*	(1)	**YKC4030**
Aperture Plate	(1)	**ZKC824**
Retaining Ring	(1)	**ZKC2186**
Setscrew	(9)	**YZ3405**
Nut	(3)	**570779**
Spire Clip	(6)	**GHF712**
Gear Knob;		
Vehicles to VIN 403722	(1)	**UKC3004**
Vehicles from VIN 403723	(1)	**ULC3209**
Nut-Gear Knob Locking;		
Vehicles to VIN 403722	(1)	**NT605041**
Vehicles from VIN 403723	(1)	**ULC3248**
Gearlever;		
Vehicles to VIN 403722	(1)	**TKC4299**
Vehicles from VIN 403723	(1)	**TKC6424**
Retaining Cap *(Gear lever)*	(1)	**UKC3159**
Setscrew	(1)	**SH106121**
Plunger	(1)	**22G1988**
Spring-Plunger	(1)	**22G1989**
Torsion Spring	(1)	**UKC5394**
Retainer-Torsion Spring	(2)	**UKC3238**
Bracket *(For UKC3238)*	(2)	**UKC5400**
Setscrew *(Countersunk)*	(2)	**SF106201**
Setscrew	(2)	**SH106201**
Switch Assembly *(Reverse);* *See also ELECTRICAL.*		
Vehicles to VIN 403722	(1)	**TKC6761**
Vehicles from VIN 403723	(1)	**TKC6802**
Lock Nut (Switch)	(1)	**22A1613**
Clip *(wiring harness)*	(1)	**UKC4208**
Sleeve *(For UKC4208)*	(1)	**UKC5424**
Washer	(1)	**GHF300**
Setscrew *(Gearchange bias spring)*	(1)	**UKC8635**
Nut	(2)	**NT108041**

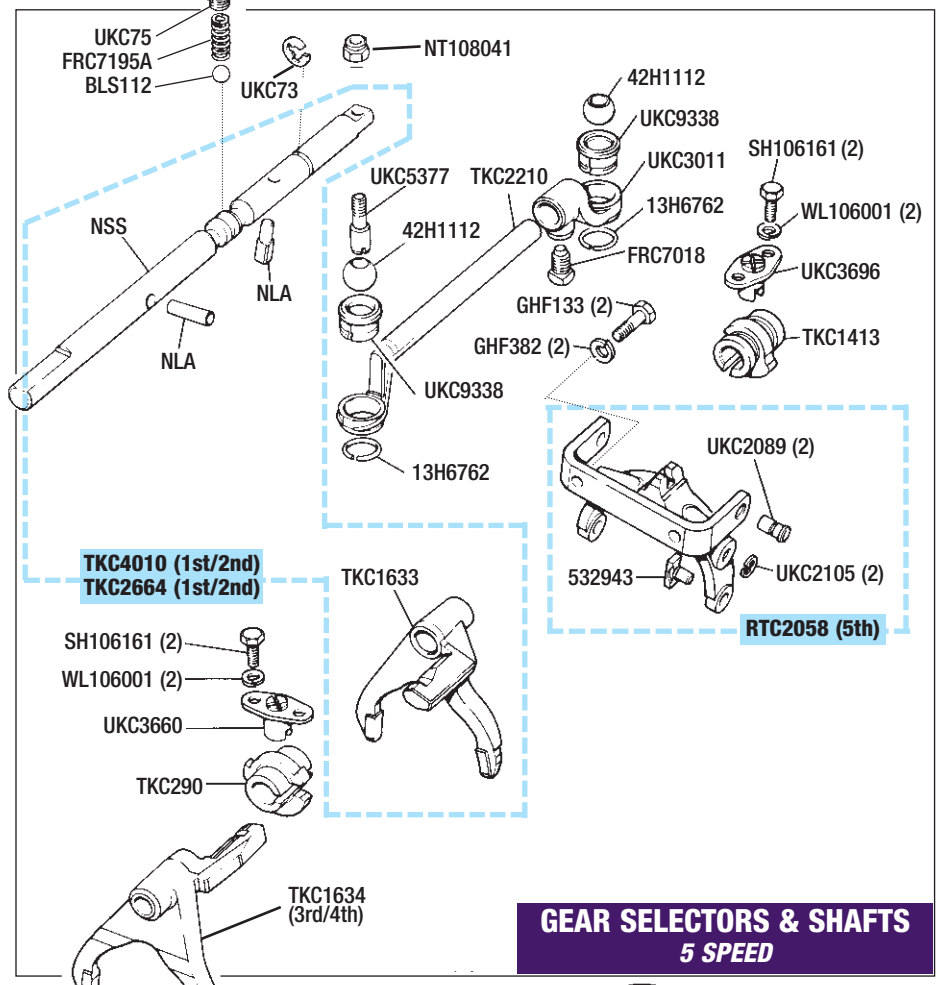

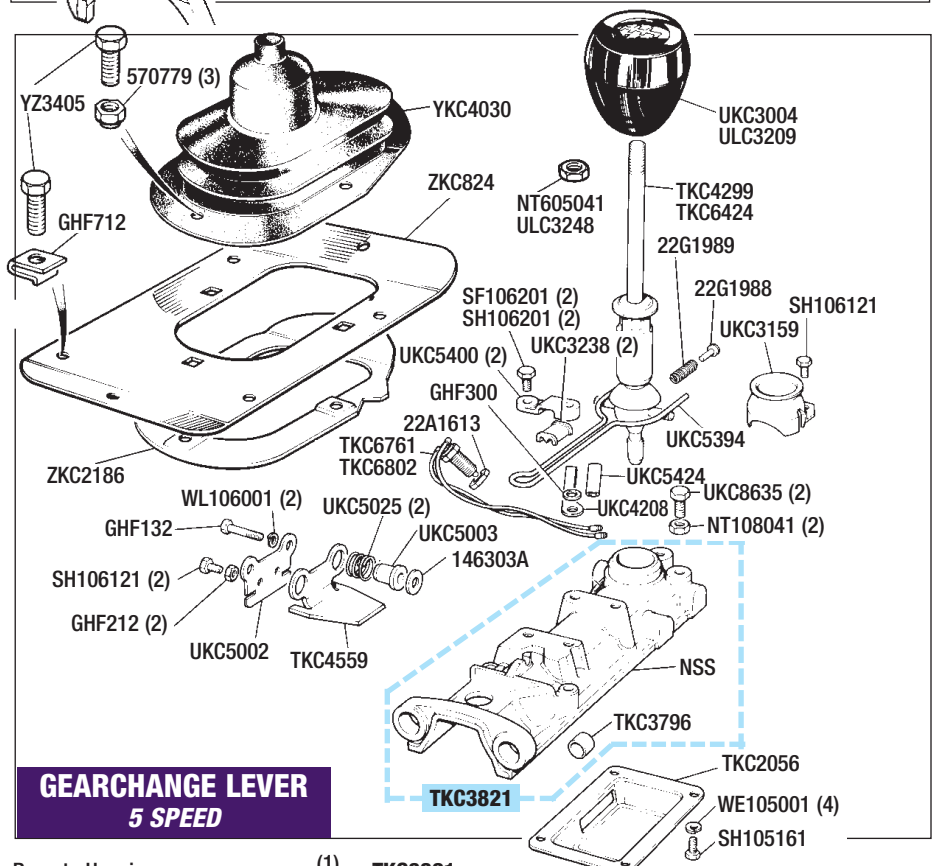

Description	Qty Req.	Part No.
Remote Housing *(Bare)* *Gearchange selector.*	(1)	**TKC3821**
Bush *(Selector rod)* *Gearchange housing.*	(1)	**TKC3796**
Cover Plate *(Gearchange housing)*	(1)	**TKC2056**
Setscrew	(4)	**SH105161**
Washer-Spring	(4)	**WE105001**
Baulk Plate-Reverse	(1)	**TKC4559**
Spring-Baulk Plate	(2)	**UKC5025**
Spacer *(For UKC5025)*	(2)	**UKC5003**
Shim *(For UKC5003)* *Use as required.*	(2)	**146303A**
Backing Plate *(For TKC4559)*	(1)	**UKC5002**
Bolt	(2)	**GHF132**
Washer-Spring	(2)	**WL106001**
Setscrew	(2)	**SH106121**
Nut	(2)	**GHF212**

Description	Qty Req.	Part No.

Automatic Gearbox Assembly & Torque Converter (Borg Warner)

***Note;** there are 2 different types of Borg Warner automatic gearbox's fitted to TR7's; Type 65 up to VIN 402026 (1980 models). Type 66 from VIN 402027 (1981 onwards).*

Description	Qty Req.	Part No.
Automatic Gearbox - Type 65; *Gearbox ID Number - 027M & 063. All models to VIN 402026 (1980 models).*		
Recon *Less Torque Converter & Bellhousing.*	(1)	**AAU1899R**
Gearbox Assembly - Type 66; *Gearbox ID Number - 6076, 6077 (6069 - TR8). All models from VIN 402027 (1981 onwards).*		
Recon *Less Torque Converter & Bellhousing.*	(1)	**AEU1611R**
Gearbox Mounting *See also **ENGINE & GEARBOX MOUNTINGS.***	(1)	**TKC1044**
Torque Convertor *(Recon);*		
Type 65	(1)	**601000R**
Type 66	(1)	**AEU1637R**
Setscrew	(4)	**SH606061**
Washer	(4)	**GHF302**
Breather Tube	(1)	**154775**
Adaptor-Breather Tube	(1)	**RTC1883**
'O' Ring	(1)	**RTC26A**
Dip Stick	(1)	**UKC5590**
Oil Filler Tube	(1)	**RKC1899**
Setscrew	(1)	**SH108451**
Washer-Spring	(1)	**GHF382**
Nut	(1)	**GHF213**
'Dowel' Bolt	(1)	**UKC6243**
Washer-Flat	(1)	**GHF301**
Washer-Spring	(1)	**GHF333**
Nut	(1)	**GHF202**
Setscrew	(3)	**GHF104**
Washer-Flat	(1)	**GHF332**
Dowel	(1)	**DP619**
Bolt	(6)	**BH605141**
Washer-Spring	(6)	**GHF332**
Nut	(6)	**GHF201**
Bolt	(1)	**BH605131**
Washer *(Special)*	(1)	**90510912A**
Drive Flange *(Rear)*	(1)	**155755**
Washer *(For drive flange)*	(1)	**PWZ2110**
Locknut *(For drive flange)*	(1)	**510618A**
Gear Oil *(ATF) Gearbox capacity - 6.96 Litre. Including Torque Convertor/Oil Cooler.*		
0.5 Litre	(a/r)	**GGL175**
5 Litre	(a/r)	**GGL505**

Oil Cooler & Fittings

Automatic

Description	Qty Req.	Part No.
Oil Cooler Core *(Transmission) Replacement-universal type.*	(1)	**RKC1909**
Setscrew	(2)	**SH108201**
Washer-Spring	(2)	**GHF322**
Washer-Flat	(4)	**GHF301**
Washer-Spring	(2)	**GHF382**
Nut	(2)	**NJ108061**
Flexible Hose	(2)	**151210**
Clip	(4)	**626960**
Clip	(a/r)	**UKC6519**
Unipart Gear Oil *(ATF) (0.5 Litre)*		
0.5 Litre	(a/r)	**GGL175**
5 Litre	(a/r)	**GGL505**

Gearbox capacity - 6.96 Litre. Including Torque Convertor/Oil Cooler.

RECONDITIONED AUTOMATIC GEARBOX (SHOWN WITH BELL HOUSING FITTED).

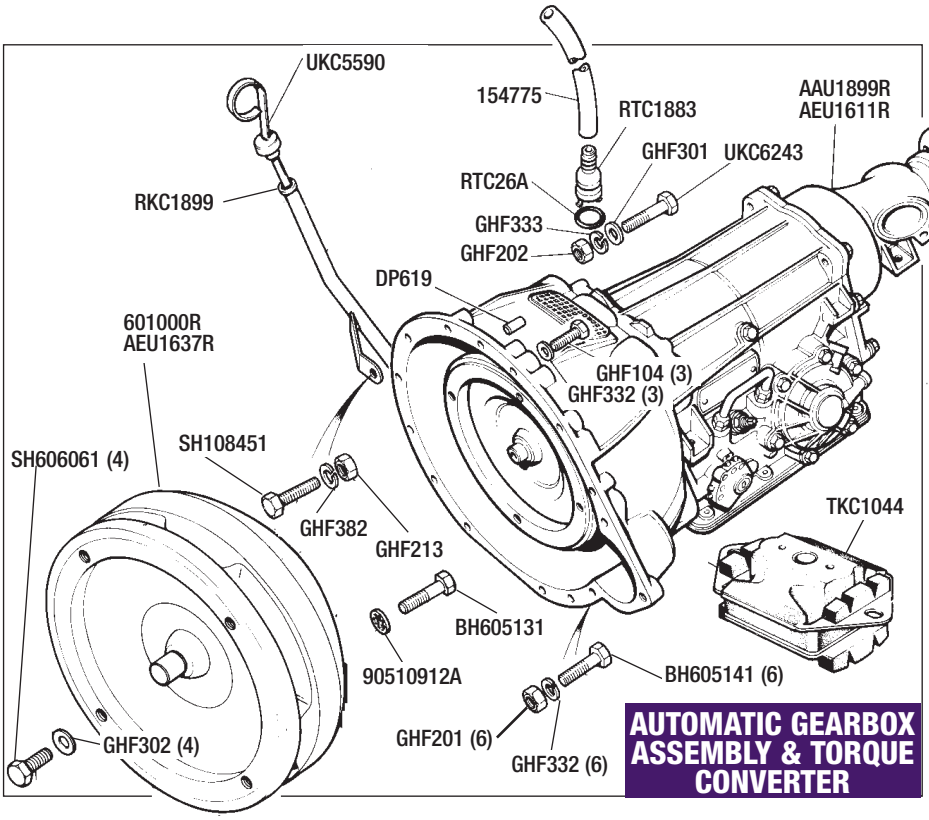

AUTOMATIC GEARBOX ASSEMBLY & TORQUE CONVERTER

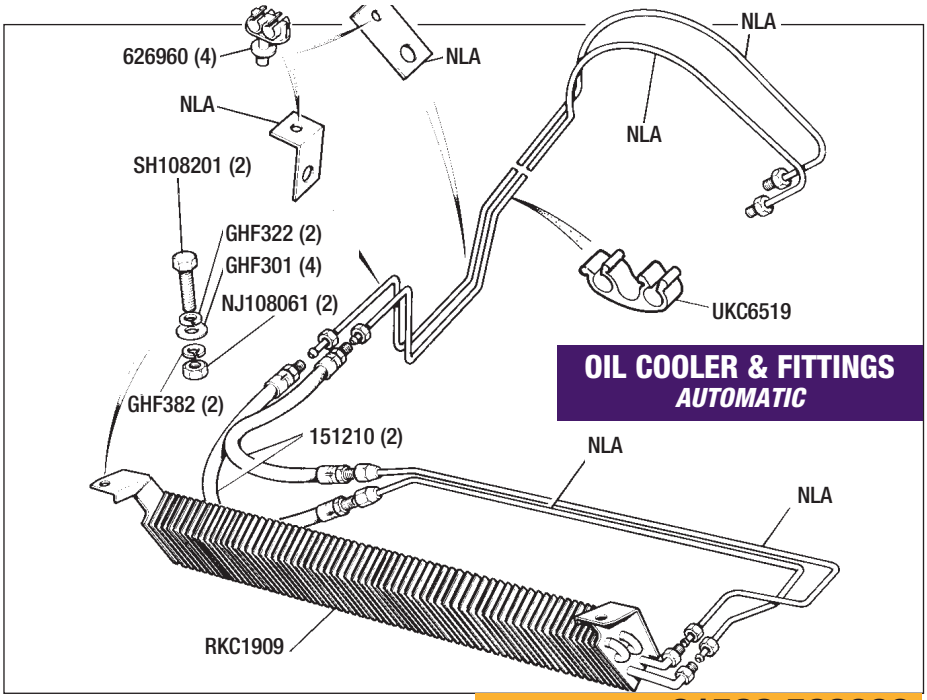

OIL COOLER & FITTINGS
AUTOMATIC

TO ORDER: 01522 568000
www.rimmerbros.co.uk

Kick Down Cable & Inhibitor Switch

Automatic

Description	Qty Req.	Part No.
'Kick Down' Cable	(1)	**TKC3760**
Clevis Pin	(1)	**PJ8506**
Washer	(1)	**WP5**
Split Pin	(1)	**UKC7840**
Inhibitor/Reverse Switch	(1)	**RTC36**
Oil Seal	(1)	**RTC1704**
Bolt *(Special)*	(1)	**RTC37**

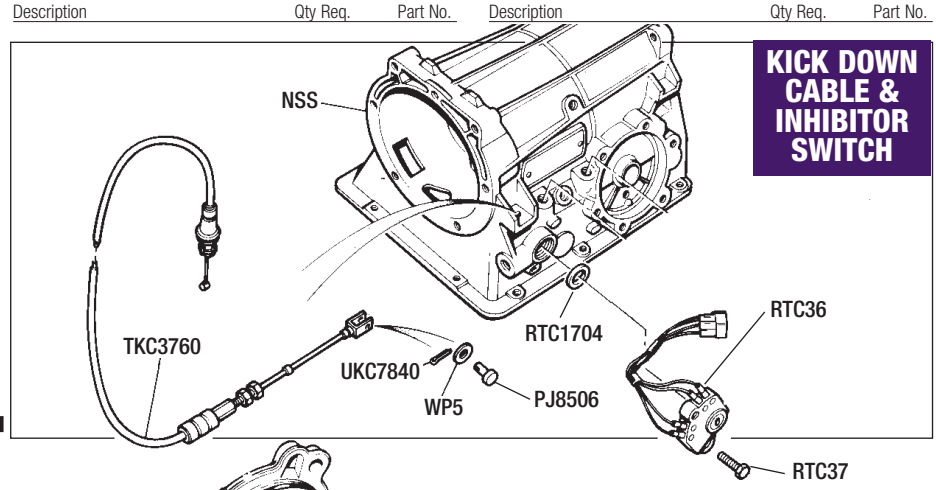

Gearbox Overhaul Components

Automatic
Service Items/Gaskets/Oil Seals

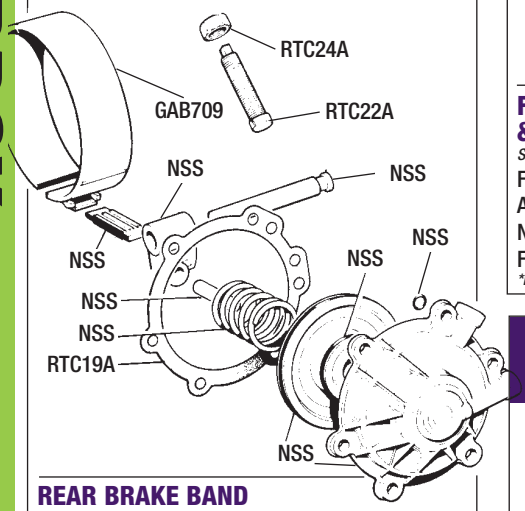

REAR BRAKE BAND & SERVO GASKET
See also Service Kits.

Description	Qty Req.	Part No.
Rear Brake Band	(1)	**GAB709**
Adjusting Screw *(Brake band)*	(1)	**RTC22A**
Nut-Locking *(For RTC22A)*	(1)	**RTC24A**
Rear Servo Gasket*	(1)	**RTC19A**

**Included in gasket set AEU3008.*

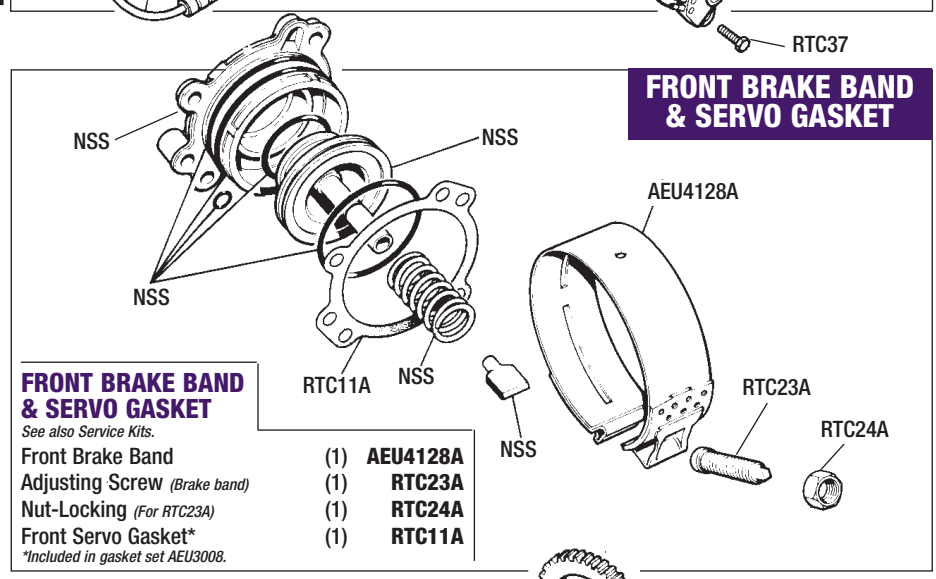

FRONT BRAKE BAND & SERVO GASKET
See also Service Kits.

Description	Qty Req.	Part No.
Front Brake Band	(1)	**AEU4128A**
Adjusting Screw *(Brake band)*	(1)	**RTC23A**
Nut-Locking *(For RTC23A)*	(1)	**RTC24A**
Front Servo Gasket*	(1)	**RTC11A**

**Included in gasket set AEU3008.*

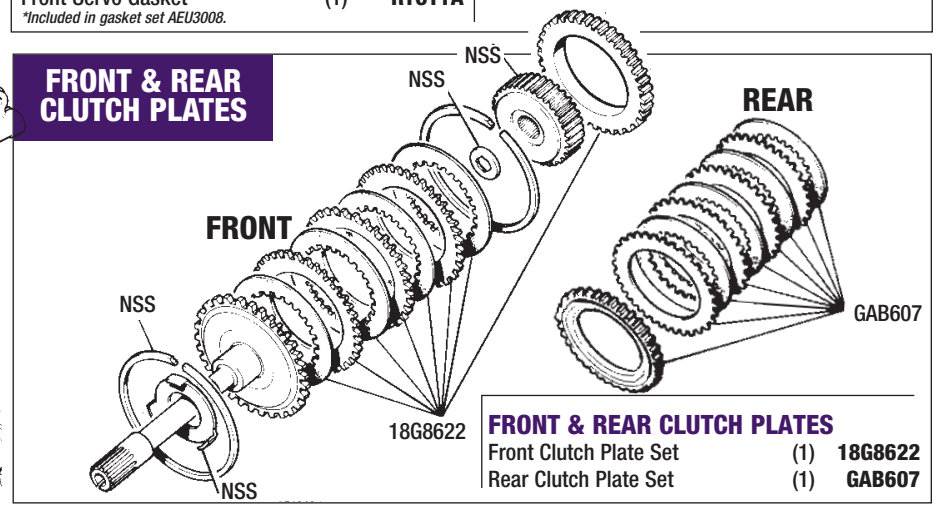

FRONT & REAR CLUTCH PLATES

Description	Qty Req.	Part No.
Front Clutch Plate Set	(1)	**18G8622**
Rear Clutch Plate Set	(1)	**GAB607**

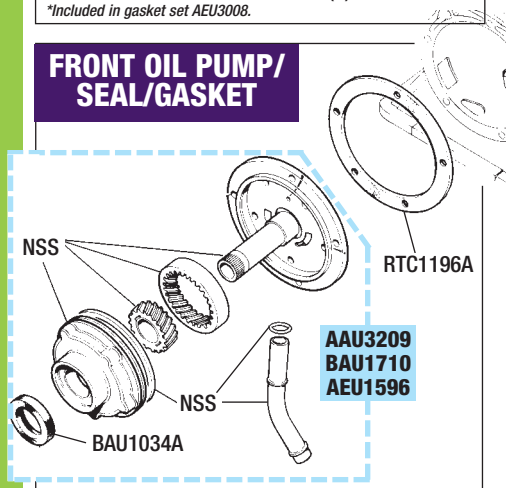

FRONT OIL PUMP/SEAL/GASKET

Description	Qty Req.	Part No.
Front Oil Pump Kit *(Type 65);*		
To G/box serial No 027-1688	(1)	**AAU3209**
From G/box serial No 027-1689	(1)	**BAU1710**
Front Oil Pump Kit *(Type 66)*	(1)	**AEU1596**
Oil Seal *(Front)*	(1)	**BAU1034A**
Oil Pump Gasket*	(1)	**RTC1196A**

**Included in gasket set AEU3008.*

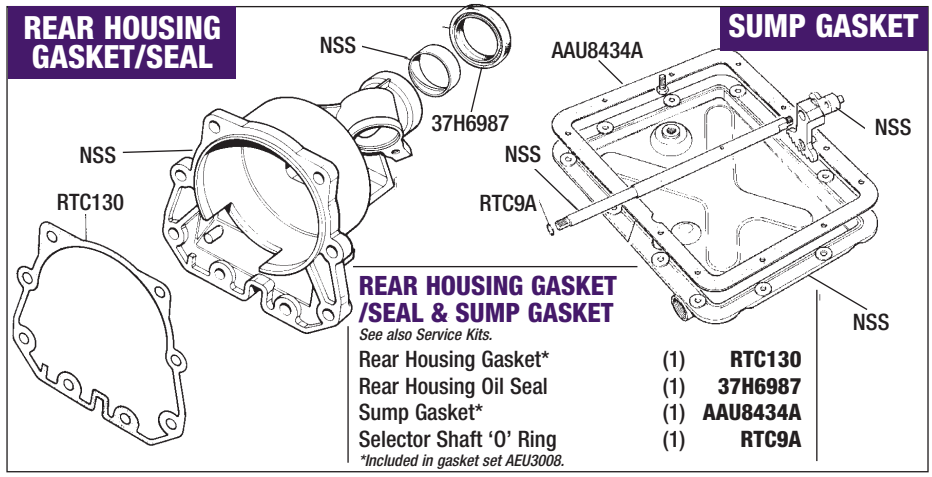

REAR HOUSING GASKET /SEAL & SUMP GASKET
See also Service Kits.

Description	Qty Req.	Part No.
Rear Housing Gasket*	(1)	**RTC130**
Rear Housing Oil Seal	(1)	**37H6987**
Sump Gasket*	(1)	**AAU8434A**
Selector Shaft 'O' Ring	(1)	**RTC9A**

**Included in gasket set AEU3008.*

FRONT CLUTCH CYLINDER & DRUM
Not Illustrated.

Description	Qty Req.	Part No.
Front Clutch Cylinder	(1)	**AEU2801**
Front Drum Assembly *(Type 65)*	(1)	**RTC148**
Front Drum Assembly *(Type 66)*	(1)	**AEU1600**

PLANETARY GEAR SET
Not Illustrated.

Description	Qty Req.	Part No.
Planet/Sun Gear Set *(Type 65)*	(1)	**AEU1964**
Planet/Sun Gear Set *(Type 66)*	(1)	**AEU1599**

Description	Qty Req.	Part No.

Service/Repair Kits & Gasket Set

Automatic

Thrust Washer Kit *(Type 65)*	(1)	**BAU2042A**
Thrust Washer Kit *(Type 66)*	(1)	**AEU1597**
Spring Kit	(1)	**521052**
'O' Ring & Seal Kit	(1)	**AEU3007A**
Oil Sealing Ring Kit	(1)	**AEU2868**
Gasket Set	(1)	**AEU3008A**
Unipart Gear Oil (ATF) *(0.5 Litre)*		
0.5 Litre	(a/r)	**GGL175**
5 Litre	(a/r)	**GGL505**

Gearbox capacity - 6.96 Litre. Including Torque Convertor/Oil Cooler.

SERVICE/REPAIR KITS & GASKET SET

THRUST WASHER KIT

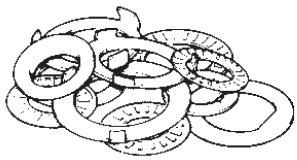

BAU2042A
AEU1597

SPRING KIT

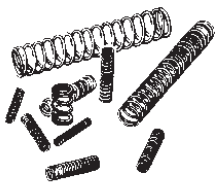

521052

'O' RING & SEALING KIT

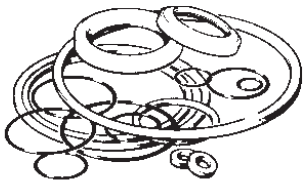

AEU3007A

OIL SEALING RING KIT

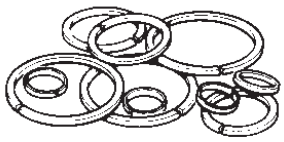

AEU2868

GASKET SET

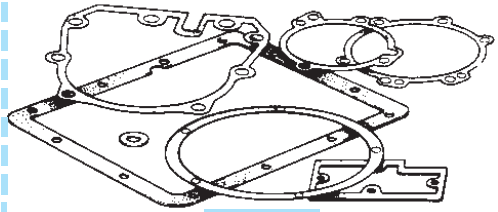

AEU3008A

SPEEDO CABLE & DRIVE
AUTOMATIC

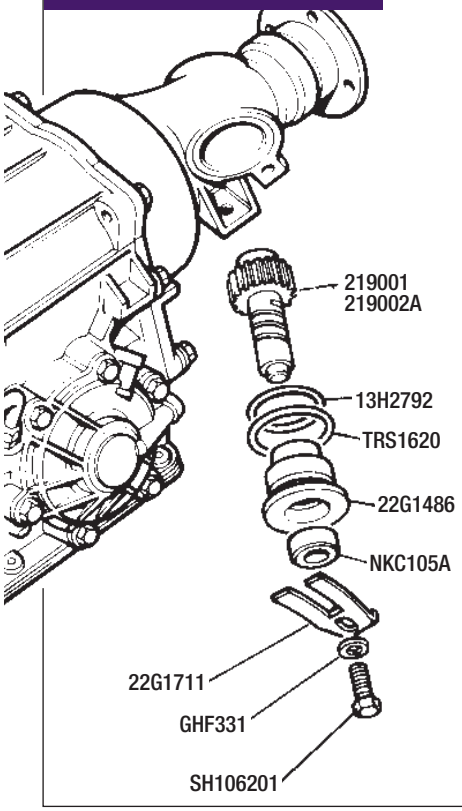

Gear Selector Assembly

Automatic
See also; ***Interior & Trim.***

Gear Selector Assembly	(1)	**RKC4228**
Bulb *(Gear select illumination)*	(1)	**GLB286**
Bulb Holder	(1)	**13H8690**
Gear Knob only	(1)	**UKC2986**
Gear Knob complete	(1)	**UKC2986K**
Plunger-Selector Lever	(1)	**ULC1220**
Bolt	(2)	**BH106051**
Nut *(Locking)*	(2)	**UKC3787**
Setscrew	(2)	**GHF133**
Washer-Locking	(2)	**GHF382**
Nut	(2)	**GHF213**
Locknut-Plastic*	(1)	**570779**
Spire Clip*	(5)	**GHF712**
Screw-Self Tapping*	(6)	**YH6405**
**Plate to facia.*		
Control Rod	(1)	**TKC1380**
Clip *(Control rod)*	(2)	**155455**
Selector Lever	(1)	**UKC9955**
Washer-Locking	(1)	**GHF382**
Nut	(1)	**NT108041**

GEAR SELECTOR ASSEMBLY
AUTOMATIC

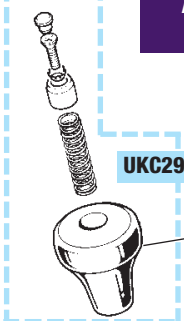

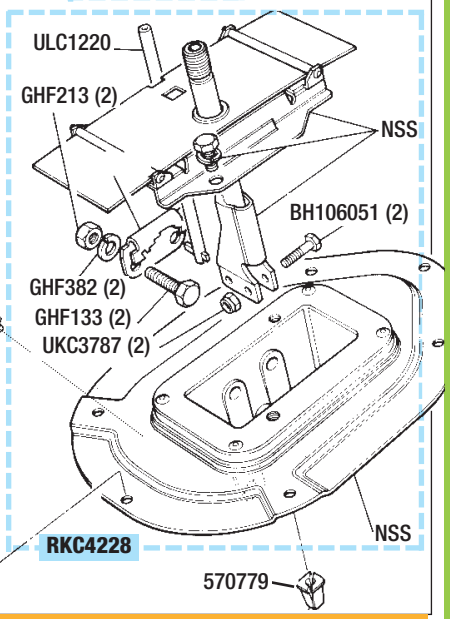

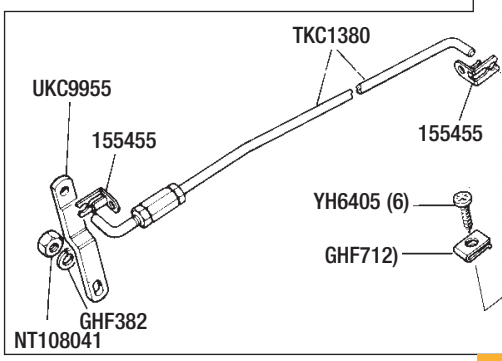

Speedo Cable & Drive

Automatic

Speedometer Cable;		
To VIN 402026	(1)	**GSD287**
From VIN 402027 *(1981 models on)*	(1)	**GSD388**
With push button trip reset.		
Speedo Drive Pinion		
To VIN 402026 *(20 teeth)*	(1)	**219001**
From VIN 402027 *(21 teeth)*	(1)	**219002A**
'O' Ring/Seal	(1)	**13H2792**
'O' Ring/Seal	(1)	**TRS1620**
Housing/Bearing *(Speedo drive pinion)*	(1)	**22G1486**
Oil Seal *(Speedo drive pinion)*	(1)	**NKC105A**
Retaining Plate	(1)	**22G1711**
Setscrew *(for 22G1711)*	(1)	**SH106201**
Washer-Spring	(1)	**GHF331**
Speedo Worm Drive Gear *(in gearbox)*	(1)	**22G1753**

TO ORDER: 01522 568000
www.rimmerbros.co.uk

Description	Qty Req.	Part No.

Propshaft
4 Speed & Auto to VIN 402026

Propshaft;		
4 Speed Manual	(1)	**TKC2498**
Automatic *(To VIN 402026)*	(1)	**TKC2499**
Universal Joint	(1)	**GUJ115**
Bolt	(8)	**144961A**
Nut-Locking	(8)	**TN3209**
Safety Strap	(1)	**UKC806**
Setscrew *(For UKC806)*	(2)	**SH108121**
Washer-Spring	(2)	**GHF382**
Captive Nut	(2)	**NJ108061**
Bump Stop *(Propshaft)*	(1)	**UKC8268**
Spacer	(2)	**UKC8413**
Washer	(2)	**WC105001**
Nut	(2)	**NY105041**

TECHNICAL JOTTINGS

Re-fitting the 4 speed Propshaft

As recommended by British Leyland, when replacing or re-fitting the propshaft on vehicles fitted with 4 speed manual gearbox, the propshaft should be 'reversed', ie CV joint to the rear axle.

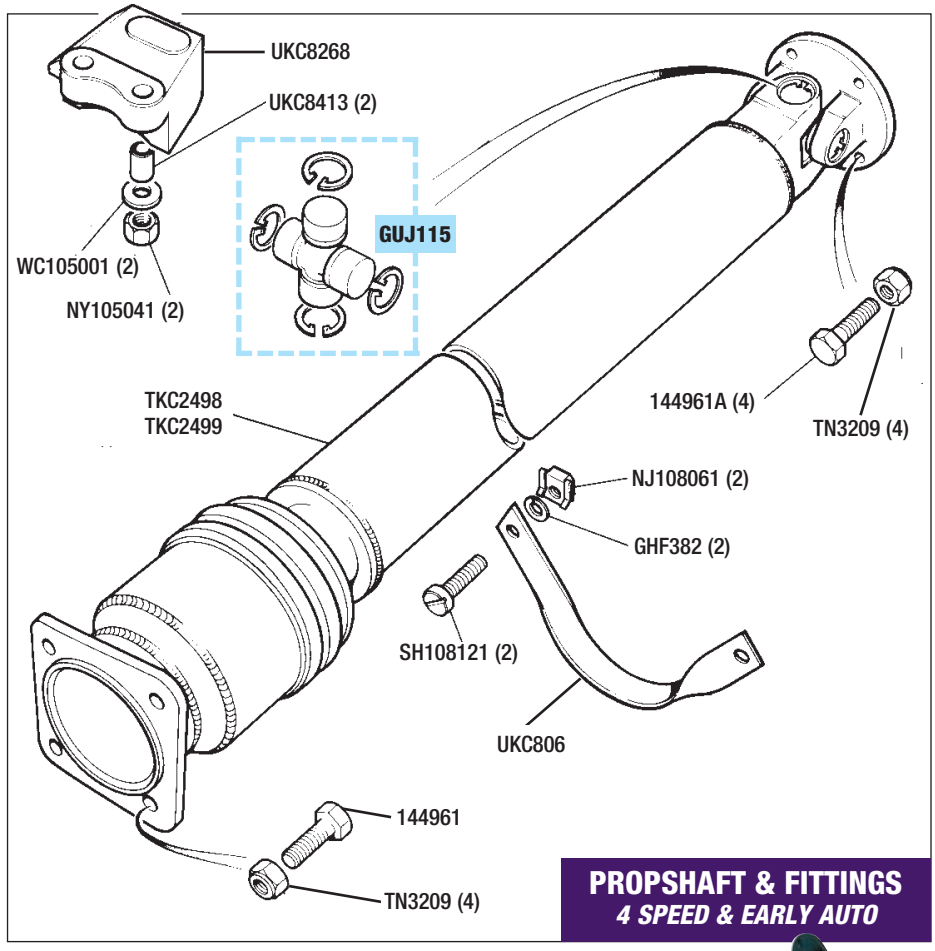

PROPSHAFT & FITTINGS
4 SPEED & EARLY AUTO

NEW PROPSHAFTS FOR ALL MODELS

Propshaft
5 Speed & Auto VIN 402027 on

Propshaft (New) *(Outright sale)*	(1)	**PKC1979**
Bolt	(8)	**FRC90**
Nut	(8)	**GHF233**
Bump Stop *(Propshaft)*	(1)	**UKC8268**
Spacer	(2)	**UKC8413**
Washer	(2)	**WC105001**
Nut	(2)	**NY105041**

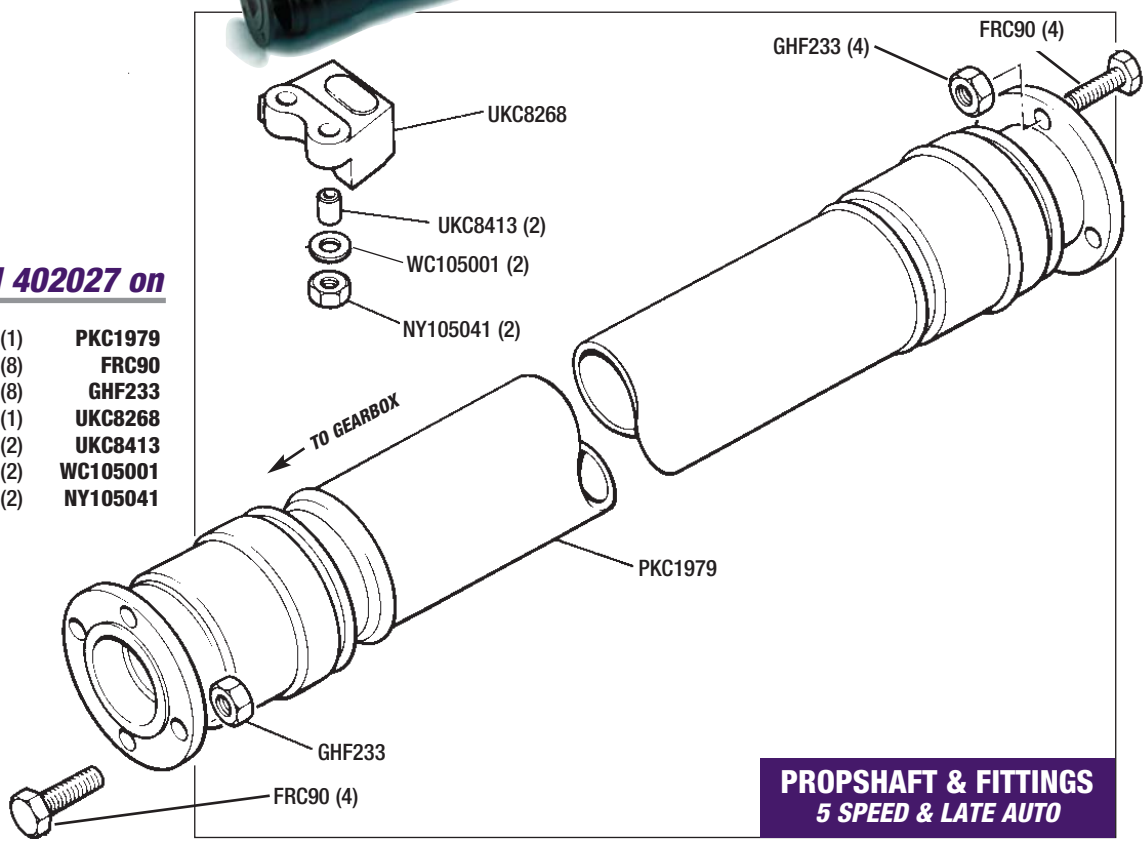

PROPSHAFT & FITTINGS
5 SPEED & LATE AUTO

Description | Qty Req. | Part No.

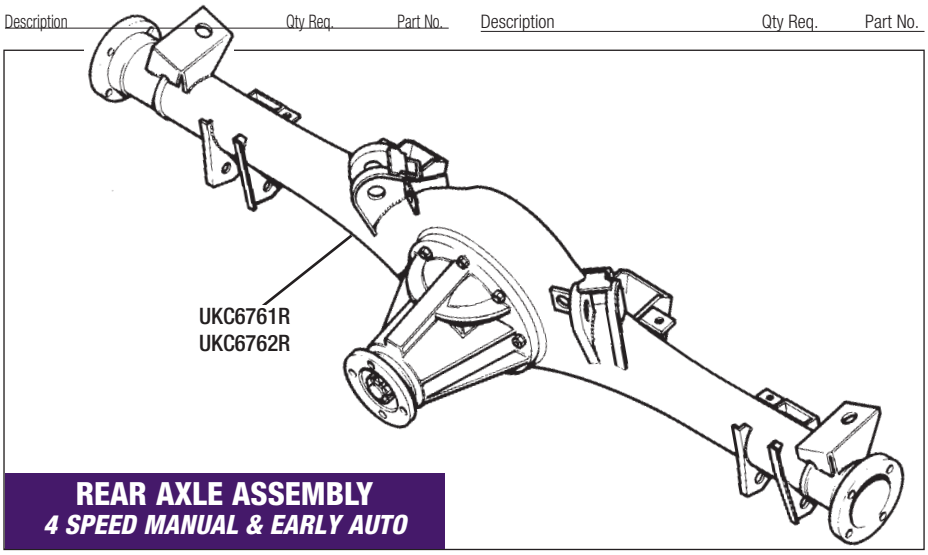

REAR AXLE ASSEMBLY
4 SPEED MANUAL & EARLY AUTO

Rear Axle Assembly

4 Speed Manual & Automatic to VIN 402000

Rear Axle Assembly *(Reconditioned);* *New axle casing with diff' unit, less Halfshafts.*		
4 Speed Manual (3.63:1)	(1)	**UKC6761R**
Automatic (3.27:1)	(1)	**UKC6762R**
Unipart EP90 Gear Oil *(0.5 litre)* *Rear axle capacity - 1.3 Litre.*	(a/r)	**GGL190**

REAR AXLE & RATIO IDENTIFICATION

The axles & differentials listed in this section, are as originally fitted by the factory to all 4 speed Manual and all Automatics up to VIN 402000. Axles for vehicles with 4 speed manual gearboxes are prefixed 'CG' (diff ratio 3.63:1), and automatic's are prefixed 'CT' (diff ratio 3.27:1). Original factory replacement Differential units were supplied with either 'collapsible' or 'non collapsible' type spacer. Factory specification changes were made (at axle numbers CG51494 & CT2054) to the diff' carrier & planet gear etc, so if you are considering re-building your own differential, note that early components cannot be interchanged with the later specification parts. However, if replacing the diff' as a complete unit, then either type may be fitted to the axle casing.

Differential Assembly

4 Speed Manual & Automatic to VIN 402000

Differential Assembly; *Ready to bolt to axle case, less gasket 114749.*		
4 Speed (New) (3.63:1)	(1)	**TKC2619**
4 Speed (Recon) (3.63:1)	(1)	**TKC2619R**
Automatic (New CWP) (3.27:1)	(1)	**TKC2768RN**
Automatic (Recon) (3.27:1)	(1)	**TKC2768R**
Gasket *(Housing to axle case)*	(1)	**114749**
Casing/Housing *(Front pinion)*	(1)	**519024**
Spacer	(4)	**60070**
Bolt	(4)	**104554**
Washer-Spring	(4)	**GHF333**
Bearing *(Pinion rear)*	(1)	**134065**
(1) Shim *(For pinion bearing)*		*(See separate Panel)*
Crownwheel & Pinion (4sp) (3.63:1)		
To axle No CG51494 *Use with collapsible spacer.*	(1)	**159802**
From axle No CG51495 *Use with non collapsible spacer.*	(1)	**RKC4549**
Crownwheel & Pinion (Auto) (3.27:1)		
To axle No CT2054 *Use with collapsible spacer.*	(1)	**UKC6733**
From axle No CT2055 *Use with non collapsible spacer.*	(1)	**DAM4589**

DIFFERENTIAL ASSEMBLY
4 SPEED MANUAL & EARLY AUTO

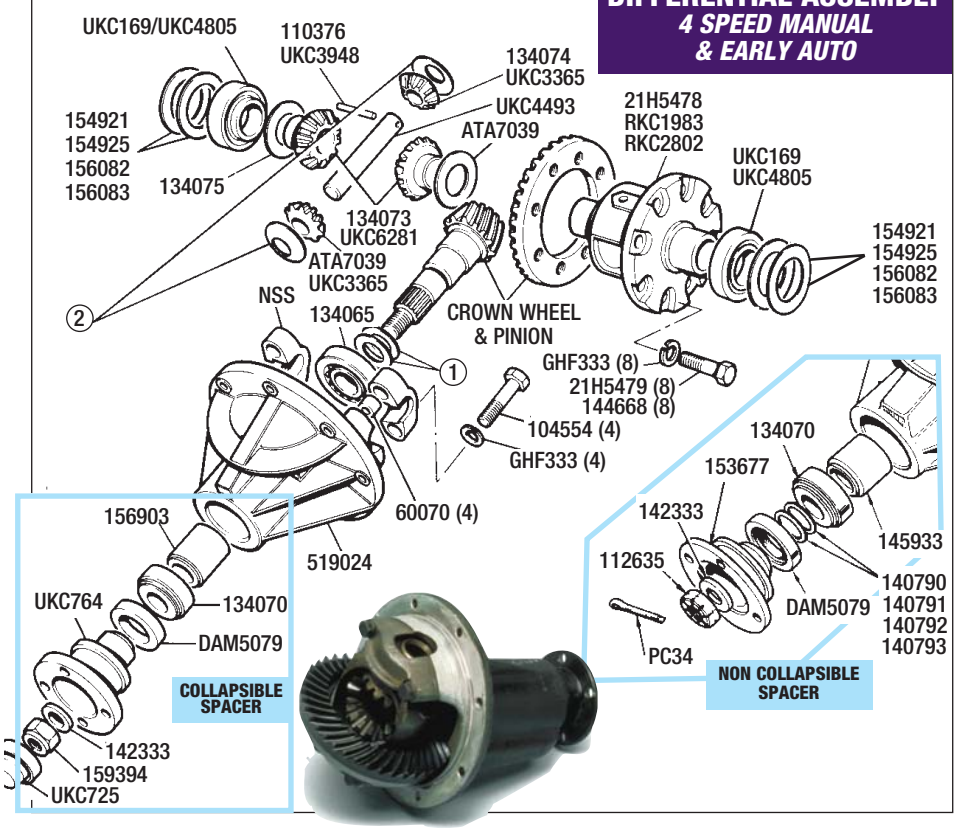

Description | Qty Req. | Part No.

(1) SHIMS - PINION BEARING
(Thickness in inches/thousandths shown in brackets)

145918 (.0750)	145922 (.0810)	145926 (.0870)
145919 (.0765)	148102 (.0820)	145927 (.0885)
148099 (.0770)	148103 (.0830)	145928 (.0900)
145920 (.0780)	145924 (.0840)	145929 (.0915)
148100 (.0790)	148104 (.0850)	145930 (.0930)
145921 (.0795)	145925 (.0855)	145931 (.0945)
148101 (.0800)	148105 (.0860)	145932 (.0960)

(2) THRUST WASHER - DIFFERENTIAL GEAR
(Thickness in mm shown in brackets)

UKC4788 (0.69)	UKC4792 (0.89)	UKC4796 (1.09)
UKC4789 (0.74)	UKC4793 (0.94)	ULC2029 (1.14)
UKC4790 (0.79)	UKC4794 (0.99)	ULC2030 (1.19)
UKC4791 (0.84)	UKC4795 (1.04)	

Diff' Carrier Assembly *(4 Speed);*		
To axle No CG51494	(1)	**21H5478**
From axle No CG51495	(1)	**RKC1983**
Diff' Carrier Assembly *(Auto);*		
To axle No CT2054	(1)	**RKC2802**
From axle No CT2055	(1)	**RKC2802**
Bolt *(Carrier to crownwheel)*		
4 Speed	(8)	**21H5479**
Automatic	(8)	**144668**
Washer-Spring	(8)	**GHF333**
Loctite Adhesive - *(Tube)* *Use for securing nuts & bolts.*	(a/r)	**GAC100**
Bearing (Diff' Carrier);		
To axle No CG51494 & CT2054	(2)	**UKC169**
From axle No CG51495 & CT2055	(2)	**UKC4805**
Shim (Bearing) *(Use as required);*		
(.0092"/.0098")	(1)	**154921**
(.0019"/.0021")	(1)	**154925**
(.0025"/.0035")	(1)	**156082**
(.0045"/.0055")	(1)	**156083**
Thrust Washer	(2)	**ATA7039**
Gear-Differential;		
To axle No CG51494 & CT2054	(2)	**134073**
From axle No CG51495 & CT2055 *Later gear UKC6281 has 15 teeth.*	(2)	**UKC6281**
Thrust Washer	(1)	**ATA7039**
Cross Shaft/Pin	(1)	**UKC4493**
Pin *(Cross shaft/pin);*		
To axle No CG51494 & CT2054	(1)	**110376**
From axle No CG51495 & CT2055	(1)	**UKC3948**
Gear-Differential;		
To axle No CG51494 & CT2054	(2)	**134074**
From axle No CG51495 & CT2055 *Later gear UKC3365 has 10 teeth.*	(2)	**UKC3365**
(2) Thrust Washer *(For differential gear)*		*(See separate Panel)*

Differentials fitted with Collapsible type Spacer

Spacer *(Collapsible)*	(1)	**156903**
Bearing *(Front pinion)*	(1)	**134070**
Oil Seal *(Front pinion)*	(1)	**DAM5079**
Flange-Front Pinion	(1)	**UKC764**
Washer	(1)	**142333**
Nut *(Flange/front pinion)*	(1)	**159394**
Shield *(Flange)*	(1)	**UKC725**

Differentials fitted with Non-Collapsible type Spacer

Spacer *(Non-Collapsible)*	(1)	**145933**
Bearing *(Front pinion)*	(1)	**134070**
Shim (Bearing) *(Use as required):*		
.030" thickness	(1)	**140790**
.010" thickness	(1)	**140791**
.005" thickness	(1)	**140792**
.003" thickness	(1)	**140793**
Oil Seal *(Front pinion)*	(1)	**DAM5079**
Flange-Front Pinion	(1)	**153677**
Washer	(1)	**142333**
Nut *(Castle headed) (Flange/front pinion)*	(1)	**112635**
Split Pin	(1)	**PC34**

TO ORDER: 01522 568000
www.rimmerbros.co.uk

Rear Axle Casing/Halfshafts & Hub

4 Speed Manual & Automatic to VIN 402000

Description	Qty Req.	Part No.
Axle Casing *(Bare)*	(1)	**RKC3302**
Breather	(1)	**21H6060**
Washer	(1)	**GHF302**
Seal *(Rubber)*	(1)	**WF509**
Filler Plug	(1)	**22G2115**
Stud	(8)	**2A7226**
Locates differential to axle.		
Washer-Spring	(8)	**GHF332**
Nut	(8)	**GHF201**
Gasket	(1)	**114749**
Halfshaft	(2)	**TKC558**
Woodruf Key	(2)	**UKC1217**
Outer Hub Assembly	(2)	**UKC1343**
Includes studs.		
Wheel Stud	(8)	**UKC2213**
Washer	(2)	**142333**
Nut *(Castle headed)*	(1)	**21A79**
Split Pin	(2)	**PC15**
Bolt	(8)	**ATJ6590**
Washer-Spring	(8)	**GHF332**
Nut	(8)	**GHF201**
Rear Hub Bearing Kit	(2)	**GHK1030**
Kit is per WHEEL & includes; 1 of each hub seal GHS181/GHS184, 1 bearing GHB180 & 1 gasket GFG117.		
Hub Seal-Inner	(2)	**GHS181**
Bearing	(2)	**GHB180**
Gasket	(2)	**GFG117**
Hub Seal-Outer	(2)	**GHS184**
Housing	(2)	**UKC1218**
Oil Catcher	(2)	**104582**
Unipart EP90 Gear Oil *(0.5 litre)*	(A/R)	**GGL190**
Rear axle capacity - 1.3 Litre.		

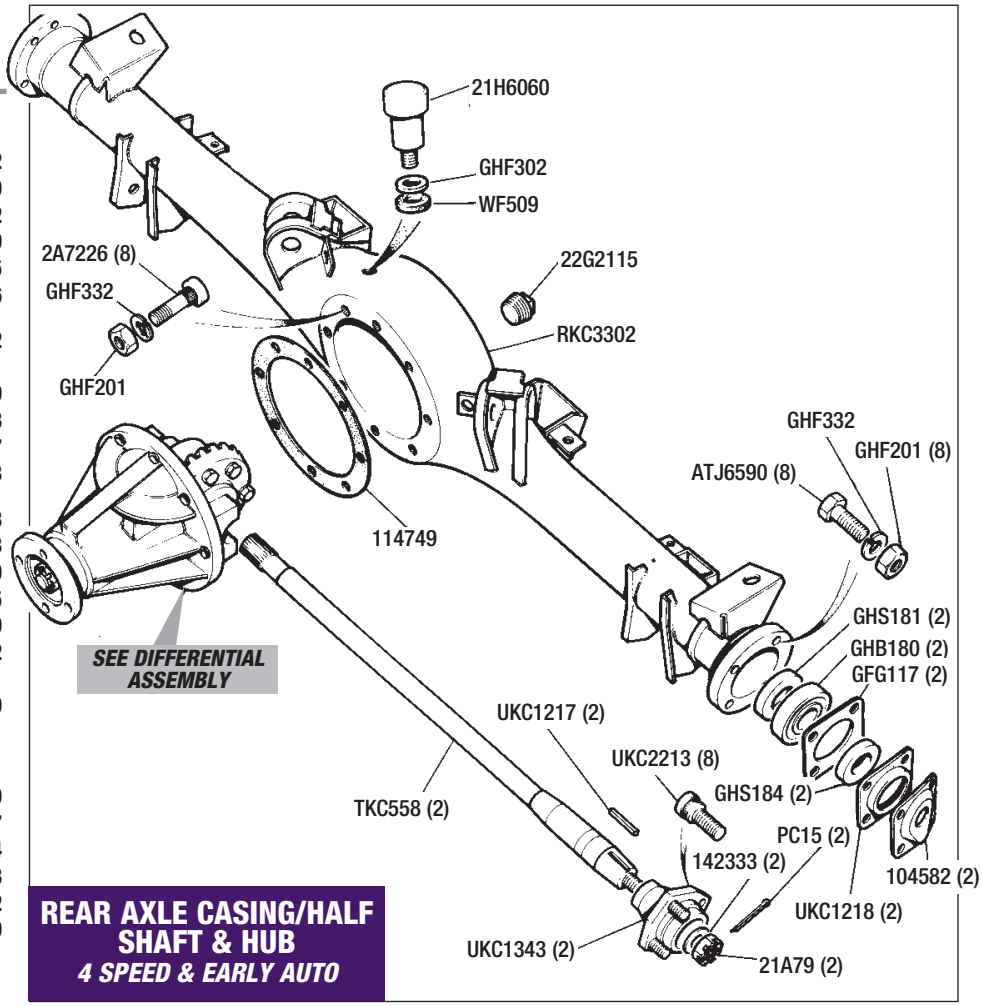

REAR AXLE CASING/HALF SHAFT & HUB
4 SPEED & EARLY AUTO

FROM AXLE ASSEMBLIES & DIFF UNITS TO HUB BEARING KITS & GASKETS

Description	Qty Req.	Part No.

Rear Axle

5 Speed Manual & Automatic from VIN 402001

Rear Axle *(Reconditioned);*
***5 Speed Manual** Less Halfshafts.*

3.90:1 Ratio *('CH' prefix)* *Factory recon' unit.*	(1)	**TKC3553**
3.90:1 Ratio *('CH' prefix)* *Rimmer Bros recon' unit.*	(1)	**TKC3553R**
3.90:1 Ratio *('CH' prefix)* *Rimmer Bros recon' unit fitted with New Crownwheel & Pinion.*	(1)	**TKC3553R/Ncwp**
3.45:1 Ratio *('CL' prefix-optional ratio)* *Rimmer Bros recon' unit.*	(1)	**ULC3005R**
3.45:1 Ratio *('CL' prefix-optional ratio)* *Rimmer Bros recon' unit fitted with New Crownwheel & Pinion.*		**ULC3005R/Ncwp**
Unipart EP90 Gear Oil *(0.5 litre)* *Rear axle capacity - 1.1 Litre.*	(a/r)	**GGL190**

Rear Axle *(Reconditioned);*
***Automatic** Less Halfshafts.*

3.08:1 Ratio *('CM' prefix)* *Rimmer Bros recon' unit.*	(1)	**TKC3554R**
3.08:1 Ratio *('CM' prefix)* *Rimmer Bros recon' unit fitted with new crownwheel & pinion.*	(1)	**TKC3554R/Ncwp**
Unipart EP90 Gear Oil *(0.5 litre)* *Rear axle capacity - 1.1 Litre.*	(a/r)	**GGL190**

AXLE ASSEMBLIES WITH STANDARD DIFF' OR QUAIFE LSD UNIT

QUAIFE LSD

Rear Axle & Limited Slip Diff'

(5 Speed Manual & Automatics from VIN 402001)

Rear Axle with New Quaife LSD unit;
Reconditioned axle, less halfshafts.

All Models (3.08:1 Ratio)	(1)	**RB7111R**
All Models (3.08:1 Ratio) *With new & Crownwheel & Pinion.*	(1)	**RB7111R/Ncwp**
Limited Slip Diff' Unit only *(Quaife)*	(1)	**RB7003**
Unipart EP90 Gear Oil *(0.5 litre)* *Rear axle capacity - 1.1 Litre.*	(a/r)	**GGL190**

***Note;** we can supply (to special order) 3.90:1 or 3.45:1 ratio axles with LSD unit. Please contact our sales team for details.*

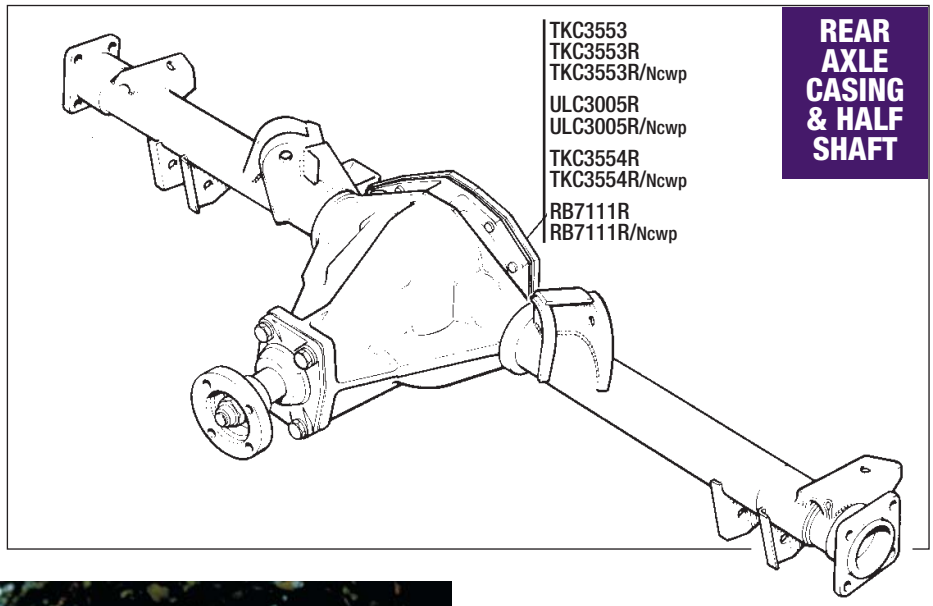

DIFFERENTIAL SERIAL NUMBERS
Where Differential serial numbers (CH, CL & CM) are quoted in the 'Rear Axle' & 'Differential Gear' Sections (to help identify Factory Specification changes), they relate to the Original units as fitted when the vehicle was new, and not subsequent replacements.

DIFFERENTIAL RATIO IDENTIFICATION
Rear Axles & Diff' gears listed in this section, are as originally fitted by the factory to all 5 speed Manual, and all Automatics from VIN 402001.
Axles for vehicles with 5 speed Manual gearboxes are prefixed 'CH' (diff ratio 3.90:1), and 'CL' (optional diff ratio 3.45:1). Automatics are prefixed 'CM' (diff ratio 3.08:1).

TO ORDER: 01522 568000
www.rimmerbros.co.uk

Differential Gears

5 Speed Manual & Automatic from VIN 402001

Description	Qty Req.	Part No.
Crownwheel & Pinion *(Gear set);*		
3.90:1 Ratio *('CH' prefix)*	(1)	**TKC3282**
3.45:1 Ratio *('CL' prefix)*	(1)	**TKC2946**
3.08:1 Ratio *('CM' prefix)*	(1)	**TKC2945**
Limited Slip Diff' Unit *(Quaife)*	(1)	**RB7003**
See photo on previous page.		
Differential Carrier Assembly *(Standard)*		**RTC2061**
Gear *(10 teeth)*	(2)	**UKC976**
Cross Pin *(Differential)*	(1)	**ULC1116**
Ball	(1)	**BLS108**
Gear *(15 teeth)*	(2)	**UKC975**
Shim	(2)	**102801**
(1) Thrust Washer *(Differential gear)*		*(See separate Panel)*
Diff' Centre Carrier	(1)	**NSS**
Bolt	(8)	**UKC963**
Bolt *(Bearing cap)*	(4)	**BH112101**
Bearing *(Differential side bearing)*	(2)	**UKC981**
(2) Shim *(Side bearings)*		*(See separate Panel)*
(3) Shim *(Rear pinion bearing)*		*(See separate Panel)*
Pinion Bearing-Rear	(1)	**UKC978**
Spacer *(Collapsible)*	(1)	**UKC979**
Pinion Bearing-Front	(1)	**539707**
Nut	(1)	**UKC823**
Oil Seal *(Pinion)*	(1)	**UKC4995**
Gasket *(Oil seal housing)*	(1)	**UKC2940**
Housing-Oil Seal	(1)	**TKC302**
Setscrew	(4)	**SH110201**
Washer-Spring	(4)	**WL110001**
Drive Flange	(1)	**UKC3877**
Spacer	(1)	**142333**
Nut *(Drive flange)*	(1)	**UKC7079**
Loctite Adhesive *(Tube)*	(1)	**GAC100**
Use for securing nuts & bolts.		
Unipart EP90 Gear Oil *(0.5 litre)*	(a/r)	**GGL190**
Rear axle capacity - 1.1 Litre.		

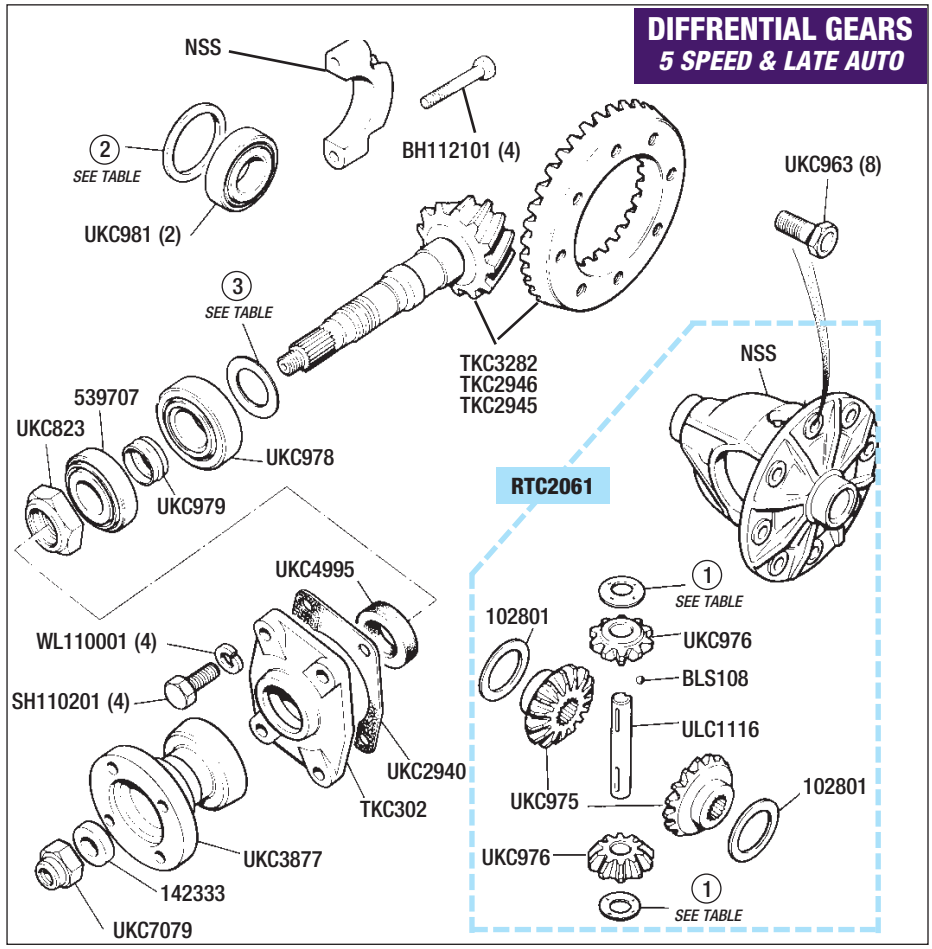

(1) THRUST WASHER - DIFFERENTIAL GEAR
(Thickness in mm shown in brackets)

UKC964	(1.17 to 1.22)	UKC969	(1.45 to 1.50)
UKC965	(1.24 to 1.30)	UKC970	(1.50 to 1.55)
UKC966	(1.30 to 1.35)	UKC971	(1.55 to 1.60)
UKC967	(1.35 to 1.40)	UKC972	(1.60 to 1.65)
UKC968	(1.40 to 1.45)		

(2) SHIMS-SIDE BEARING
(Thickness in mm shown in brackets)

UKC982 (2.85)	UKC990 (3.17)
UKC984 (2.93)	UKC992 (3.21)
UKC986 (3.01)	UKC994 (3.33)
UKC988 (3.09)	UKC996 (3.41)

(3) SHIMS-REAR PINION BEARING
(Thickness in mm shown in brackets)

UKC269 (1.25)	UKC275 (1.55)
UKC271 (1.35)	UKC277 (1.65)
UKC273 (1.45)	UKC279 (1.75)

Rear Axle Casing & Halfshafts

5 Speed Manual & Automatic from VIN 402001

Description	Qty Req.	Part No.
Axle Casing *(Bare)*	(1)	**RKC3336**
Halfshaft* (Rh) *(Late spec)*	(1)	**RKC4632**
Halfshaft* (Lh) *(Late spec)*	(1)	**RKC4633**
*Inc hub bearing kit & circlip, less studs, spacer & retaining plate.		
Rear Hub Bearing Kit	(2)	**GHK1028**
Kit is per WHEEL & includes; 1 of each hub seal GHS186/GHS187, 1 bearing GHB194 & 1 spacer ULC2350. Less circlip ULC2362.		
Hub Seal-Inner	(2)	**GHS186**
Circlip	(2)	**ULC2362**
Spacer	(2)	**ULC2350**
Hub Bearing	(2)	**GHB194**
Hub Seal-Outer	(2)	**GHS187**
Wheel Stud	(8)	**UKC2213**
Filler Plug	(1)	**UKC26**
Washer/Seal	(1)	**WF513**
Breather	(1)	**21H6060**
Bracket *(Brake Pipe)*	(1)	**UKC5256**
Gasket *(Cover to axle)*	(1)	**TKC1024**
Cover-Hypoid Housing	(1)	**TKC1885**
Setscrew	(1)	**GHF133**
Washer	(1)	**WM816**
Washer-Spring	(10)	**GHF382**
Setscrew	(9)	**SH108161**
'Stop' Bracket (Rh)	(1)	**UKC6513**
'Stop' Bracket (Lh)	(1)	**UKC6512**
Setscrew	(4)	**GHF133**
Washer	(4)	**WM83**
Nut-Locking	(2)	**GHF252**
Unipart EP90 Gear Oil *(0.5 litre)*	(a/r)	**GGL190**
Rear axle capacity - 1.1 Litre.		

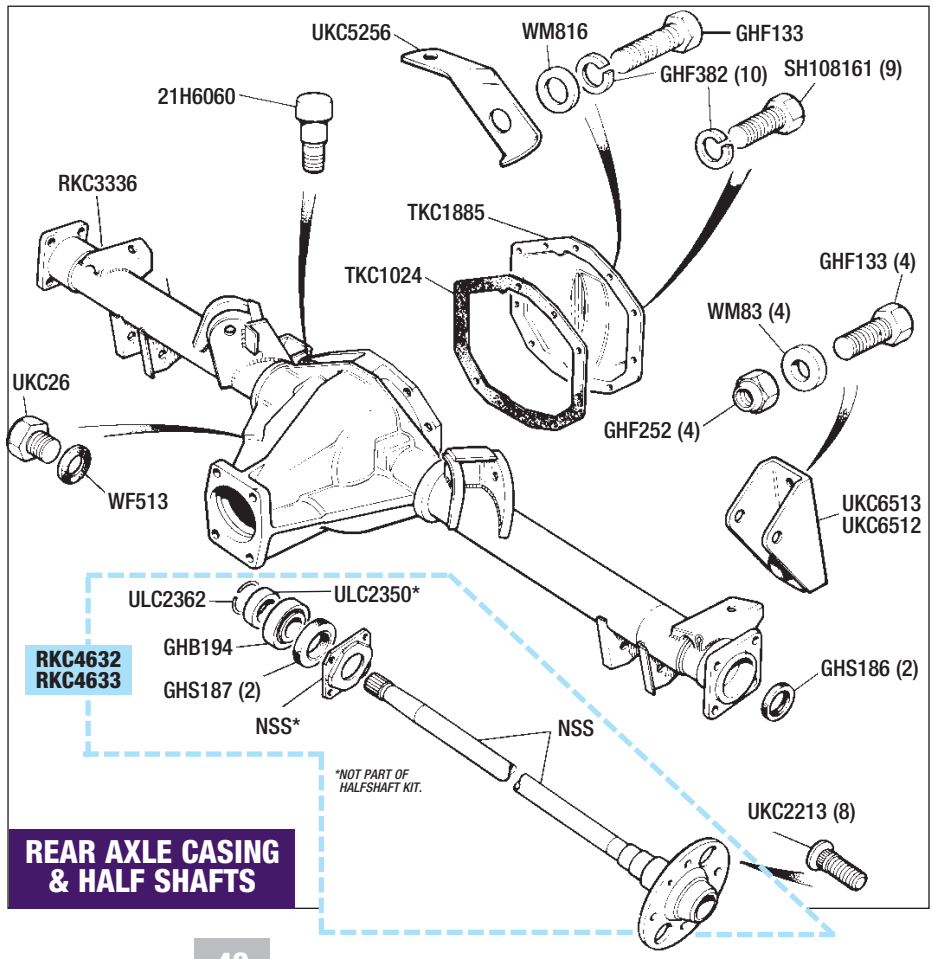

Front Subframe

Description	Qty Req.	Part No.
Front Subframe;		
Vehicles to 1977	(1)	RKC75
To Engine No CG431/CL20327.		
Vehicles from 1977	(1)	RKC2808
From Engine No CG432/CL20328.		
Subframe Bush Kit *(Rubber mountings);*		
See also; SUSPENSION PACKAGES-Bush & Bolt Packs.		
Kit inc 2 159209, 2 UKC307 & 4 155793 bushes.		
Standard Bushes	(1)	RB7061
Uprated (Hard) Bushes	(1)	RB7061H
Poly Bushes	(1)	RB7061P
Subframe Bolt Kit *(Nuts/bolts/spacers)*	(1)	RB7025
See also; SUSPENSION PACKAGES-Bush & Bolt Packs.		
Kit inc 2 bolts BH112401, 2 bolts BH112281, 4 washers UKC312, 2 spacers UKC309, 2 spacers UKC308, 4 washers UKC670, 2 spacers 159212, 2 washers 159798,2 retainers UKC310, 4 nuts NY112041.		

FRONT MOUNTINGS

Description	Qty Req.	Part No.
Bolt	(2)	BH112401
Washer *(Upper)*	(2)	UKC312
Spacer *(Upper)*	(2)	UKC309
Mounting Rubber *(Upper);*		
Standard	(2)	155793
Uprated *(Hard)*	(2)	155793H
Poly	(2)	155793P
Washer *(Lower)*	(2)	UKC670
Spacer *(Lower)*	(2)	159212
Mounting Rubber *(Lower);*		
Standard	(2)	159209
Uprated *(Hard)*	(2)	159209H
Poly	(2)	159209P
Washer *(Lower-Special)*	(2)	159798
Nut	(2)	NY112041

REAR MOUNTINGS

Description	Qty Req.	Part No.
Bolt	(2)	BH112281
Washer *(Upper)*	(2)	UKC312
Spacer *(Upper)*	(2)	UKC308
Mounting Rubber *(Upper);*		
Standard	(2)	155793
Uprated *(Hard)*	(2)	155793H
Poly	(2)	155793P
Washer *(Lower)*	(2)	UKC670
Mounting Rubber *(Lower);*		
Standard	(2)	UKC307
Uprated *(Hard)*	(2)	UKC307H
Poly	(2)	UKC307P
Retainer *(Lower mounting)*	(2)	UKC310
Nut	(2)	NY112041

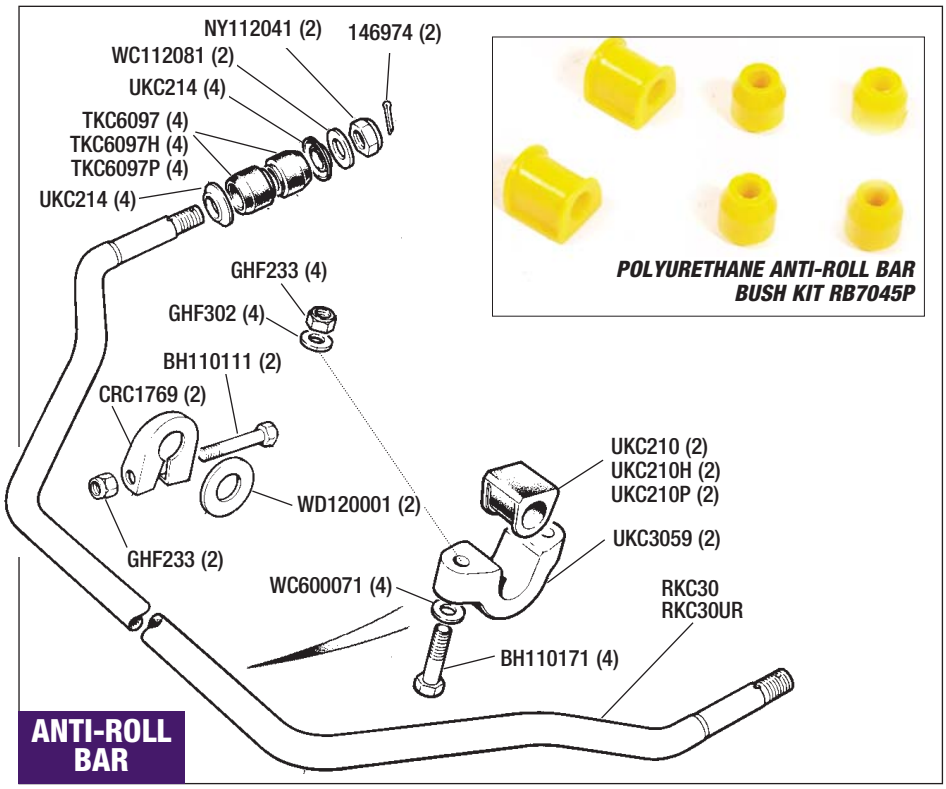

POLYURETHANE ANTI-ROLL BAR BUSH KIT RB7045P

WHETHER YOU ARE REPLACING A SINGLE ITEM OR COMPLETELY OVERHAULING/UPGRADING YOUR SUSPENSION, WE HAVE ALL THE PARTS YOU NEED.

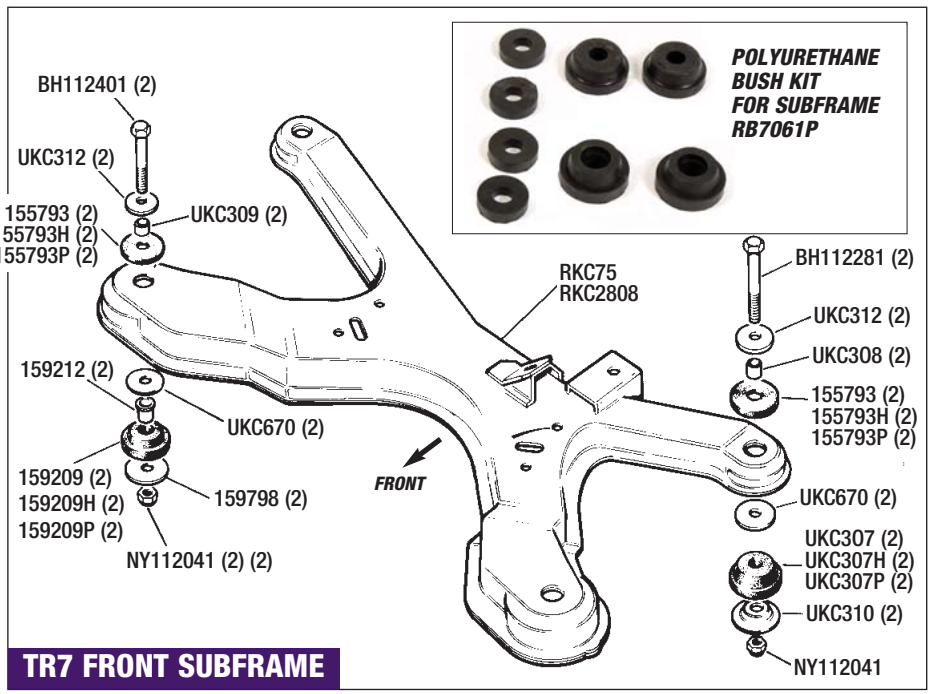

POLYURETHANE BUSH KIT FOR SUBFRAME RB7061P

Anti-Roll Bar - Front

Description	Qty Req.	Part No.
Anti-Roll Bar		
Standard	(1)	RKC30
Uprated	(1)	RKC30UR
See also: 'Uprated front & rear anti-roll bar kit' - page 53.		
Increased roll stiffness (30%) for improved handling.		
Powder coated. Uses original mountings (front bushes UKC210 require reaming out from 19mm to 22.5mm).		
Anti-Roll Bar Bush Kit;		
See also; SUSPENSION PACKAGES-Bush & Bolt Packs.		
Kit inc 4 TKC6097 & 2 UKC210 bushes.		
Standard Bushes	(1)	RB7045
Uprated (Hard) Bushes	(1)	RB7045H
Poly Bushes	(1)	RB7045P
Anti-Roll Bar Bolt Kit	(1)	RB7348
Kit includes all items marked +.		
See also; SUSPENSION PACKAGES-Bush & Bolt Packs.		
Front 'Anti-Dive' Kit	(1)	RB7100
See also; SUSPENSION PACKAGES- Shock Absorber & Spring Packages.		
Kit includes 2 aluminium spacer blocks, extra long bolts (& nuts).		
Aluminium blocks fit between subframe & anti-roll bar, to increase resistance of car front end 'diving' under heavy braking. For use with standard roll bar only.		
Mounting Bush;		
Standard	(2)	UKC210
Uprated (Hard)	(2)	UKC210H
Poly	(2)	UKC210P
Bracket *(Locates to subframe)*	(2)	UKC3059
Bolt+ *(Bracket to subframe)*	(4)	BH110171
Washer+	(4)	WC600071
Washer+	(4)	GHF302
Nut-Locking+	(4)	GHF233
Clamp	(2)	CRC1769
Bolt+	(2)	BH110111
Nut-Locking+	(2)	GHF233
Washer/Spacer	(2)	WD120001
Cup Washer*	(4)	UKC214
**Not inc in bolt kit RB7348.*		
Mounting Bush (End);		
Standard	(4)	TKC6097
Uprated (Hard)	(4)	TKC6097H
Poly	(4)	TKC6097P
Washer+	(2)	WC112081
Nut-Locking+	(2)	NY112041
Split Pin+	(2)	146974

TO ORDER: 01522 568000
www.rimmerbros.co.uk

Strut Leg/Hub & Track Arm

Front Suspension

Description	Qty Req.	Part No.
Strut Leg Self Build Kit (Standard)		
See also; *'Front Leg Kits - Pair'.*		
Comprising all new parts: strut leg, insert (standard), road spring (standard), insulators, bump stop, gaiter, thrust washer, spring pan, top mounting, upper spring pan and top dust cover.		
RH	(1)	**RB7064**
LH	(1)	**RB7063**
Strut Leg;		
Right Hand	(1)	**CAX2100**
Left Hand	(1)	**CAX2101**
Tie Rod Lever-Steering* (Rh)	(1)	**TKC3776**
Tie Rod Lever-Steering* (Lh)	(1)	**TKC3777**
**Track rod ends locate to this lever.*		
Bolt *(Tie rod lever to stub axle)*	(2)	**UKC9570**
Washer-Spring	(2)	**WL112001**
Track Arm Assembly *(Arms include ball joint & bush);*		
Right Hand		
New	(1)	**TKC878**
Reconditioned	(1)	**TKC878R**
Left Hand		
New	(1)	**TKC879**
Reconditioned	(1)	**TKC879R**
Mounting Bush;		
See also; SUSPENSION PACKAGES-Bush & Bolt Packs.		
Standard	(2)	**CRC1709**
Uprated (Hard)	(2)	**CRC1709H**
Poly	(2)	**CRC1709P**
Bolt *(Track arm mounting)*	(2)	**BH112151**
Nut-Locking	(2)	**NY112041**
Ball Joint Assembly	(2)	**GSJ154**
Inc boot/dust cover, less circlip.		
Circlip *(Ball joint to arm)*	(2)	**133634**
Dust Cover/Boot	(2)	**UKC3466**
Washer-Plain	(2)	**WC112081**
Nut (Castle Head)	(2)	**LN2211**
Split Pin	(2)	**PC20**
Shield *(Brake disc)*	(2)	**RKC802**
Setscrew *(Shield to stub axle)*	(6)	**SH106141**
Front Hub Bearing Kit	(2)	**GHK1004**
Kit is per WHEEL & includes; 1 of each bearing GHB101/GHB107, and 1 inner hub seal GHS126.		
Multi Purpose Grease *(400g tube)*	(a/r)	**GGL111**
Hub Seal-Inner	(2)	**GHS126**
Bearing-Inner	(2)	**GHB101**
Front Hub Assembly	(2)	**UKC7310**
Wheel Studs	(8)	**UKC2213**
Bearing-Outer	(2)	**GHB107**
'D' Washer	(2)	**UKC1145**
Nut *(Hub adjusting)*	(2)	**21H5128**
Retainer *(For 21H5128 nut)*	(2)	**21H5129**
Split Pin	(2)	**PC20**
Grease Cap	(2)	**2A4067**

FRONT LEG KITS - PAIR

These wonderful kits allow you to build up a brand new pair of complete front suspension legs at a significant saving - all new components with the choice of standard, spax, koni or gaz inserts (uprated/ lowered road springs are supplied with the spax, koni & gaz kits). Please note that if choosing the spax/koni/gaz inserts/uprated springs option, then you will also require the corresponding rear units (see 'Rear Shock & Spring Kit - following page).
The kits include (all new parts), 1-pair strut legs, inserts, springs, insulators, bump stops, gaiters/ties, spring pans, thrust washers/ seals, top mountings, upper spring pan & top dust cover.

Description	Part No.
Front Leg Kits Complete ***(pair)***	
Standard	**RB2009**
Spax *(Uprated - non adjustable)*	**RB2009SPAX**
Spax *(on car adjustable)*	**RB2009SPAXTA2**
Koni *(off car adjustable)*	**RB2009KONI**
Gaz *(on car adjustable)*	**RB2009GAZ**

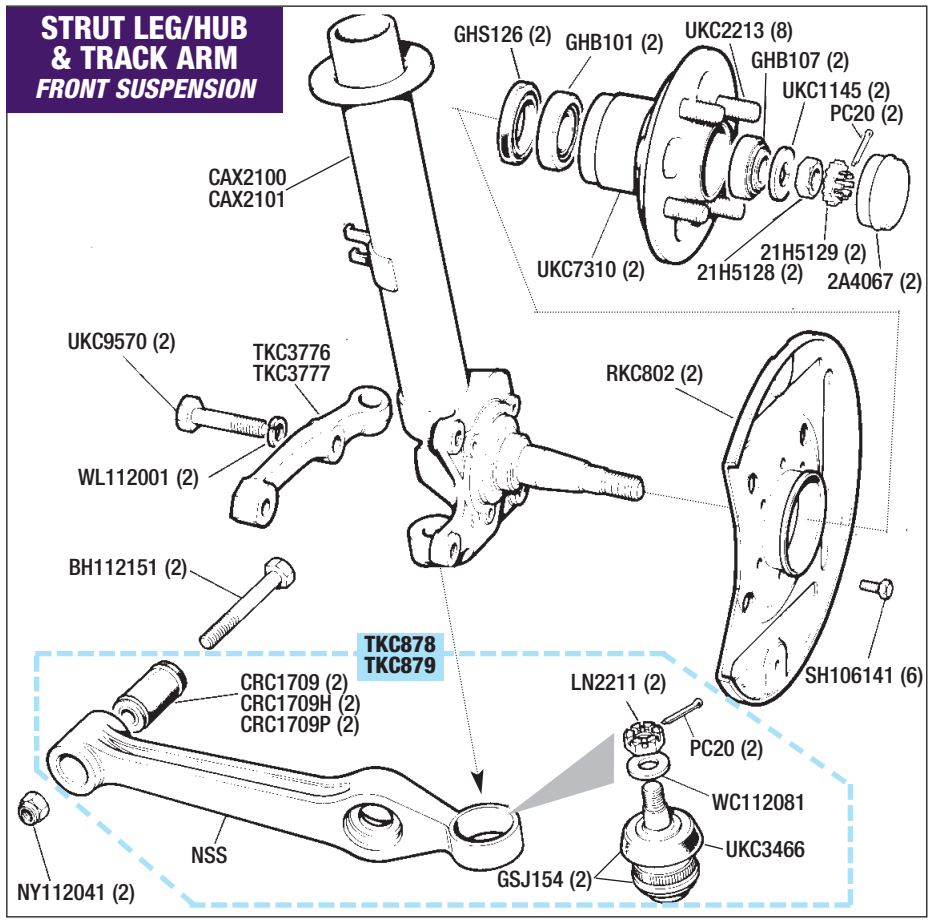

Strut Insert & Spring

Front Suspension

Description	Qty Req.	Part No.
Strut Insert *(Shock absorber);*		
SAFETY NOTE: we recommend fitting strut inserts in pairs.		
See also; *'Shock Absorber & Spring Packages'.*		
Standard Insert *(each)*	(2)	**GSA2024**
Spax Insert *(Heavy Duty) (each)*	(2)	**GSA2024S**
Spax Insert TA2 *(pair)*	(1)	**GSA2024STA2**
On Car Adjustable.		
Koni Insert *(pair)*	(1)	**GSA2024K**
Off Car Adjustable.		
Gaz Insert *(pair)*	(1)	**GSA2024G**
On Car Adjustable.		
Front Spring;		
See also; *'Shock Absorber & Spring Packages'.*		
Standard *(Fit in pairs)*	(2)	**TKC1328**
Uprated	(2)	**TKC1328UR**
Uprated to 200lb, 1" lowered ride height. Bump stop should be shortened when fitting lowered front springs. Uprated springs should only be fitted in vehicle sets, 2 front & 2 rear.		
Spring Compressor Tool	(1)	**RX1328**
Spring Insulator Rubber *(Upper)*		
Standard	(2)	**UKC5615**
Poly	(2)	**UKC5615P**
Spring Insulator Rubber *(Lower)*		
Standard	(2)	**UKC628**
Poly	(2)	**UKC628P**
Strut Gaiter	(2)	**UKC4981**
Tie Strap *(Gaiter)*	(2)	**BMK1900**
Bump Stop	(2)	**UKC1101**
Bump stop UKC1101 should be shortened when fitting TKC1328UR lowered springs.		
Spring Pan-Upper	(2)	**UKC5042**
Needle Roller Bearing Kit	(1)	**RB7709**
Car Set. Allows strut to pivot on needle bearings allowing smooth rotation. Will not seize! Kit replaces thrust washers (UKC9395), thrust collars (UKC329) & sealing washers (ULC2043).		
Thrust Collar (Nylon)*	(2)	**UKC329**
Sealing Washer (Rubber)*	(2)	**ULC2043**
Thrust Washer (Steel)*	(2)	**UKC9395**
**See also Needle Roller Bearing Kit.*		
Mounting Cone	(2)	**UKC7495**
Mounting-Top	(2)	**TKC1205**
Nut-Locking	(6)	**GHF252**
Washer	(6)	**RTC610A**
Cup-Top Mount Locating	(2)	**ULC2435**
Nut-Locking *(Strut insert retaining)*	(2)	**NY112041**
Dust Cover (Turret)	(2)	**ZKC804**

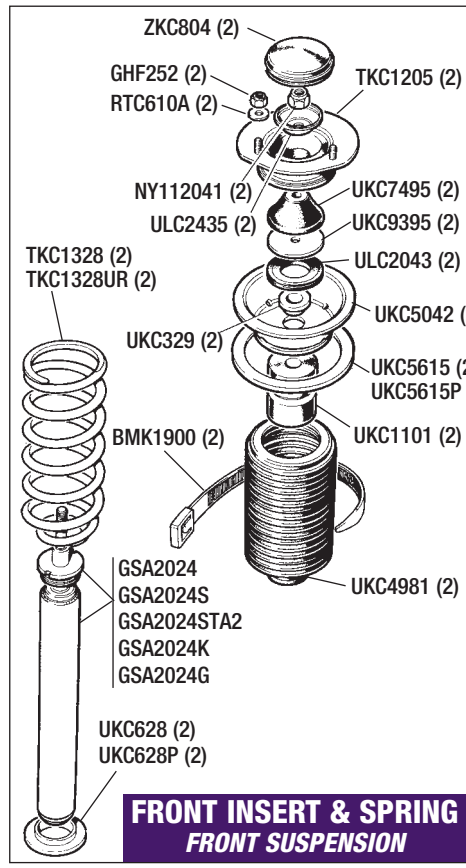

Trailing Arm, Tie Bar & Anti-Roll Bar - Rear

Rear Suspension

Description	Qty Req.	Part No.
Trailing-Arm; *Complete with standard bushes.*		
Early Vehicles		
4 speed & Auto *(to TCG100000)*	(2)	**RKC4235**
5 speed *(to TCG100000)*	(2)	**RKC4238**
Late Vehicles		
Automatic *From TCG100001 to VIN 402000.*	(2)	**RKC4235**
Automatic *(VIN 402001 on)*	(2)	**RKC4238**
5 speed *(TCG100001 on & all VIN)*	(2)	**RKC4238**
Bush-Trailing Arm *(Front & Rear); See also; SUSPENSION PACKAGES-Bush & Bolt Packs.*		
Standard	(4)	**ULC1580**
Uprated (Hard)	(4)	**ULC1580H**
Poly	(4)	**ULC1580P**
Bolt *(Trailing arm mounting)*		
Standard	(4)	**BH607241**
Uprated	(4)	**BH607241X**
Washer-Plain	(4)	**WC600071**
Nut-Locking	(4)	**GHF224**
Bracket *(Handbrake cable)*	(1)	**UKC3951**
Tie Bar *Complete with standard bushes.*	(2)	**UKC703**
Bush-Tie Bar; *See also; SUSPENSION PACKAGES-Bush & Bolt Packs.*		
Standard	(4)	**UKC5514**
Uprated (Hard)	(4)	**UKC5514H**
Poly	(4)	**UKC5514P**
Bolt *(Tie bar mounting)*	(4)	**BH607221**
Nut-Locking	(4)	**GHF224**
Bump Stop *(Tie bar);*		
to Vehicle No ACG35	(2)	**UKC2377**
from Vehicle No ACG35	(2)	**UKC6729**
Anti-Roll Bar (Rear)		
Standard	(1)	**TKC253**
Uprated	(1)	**TKC253UR**
See also: 'Uprated Front & Rear Anti-Roll Bar Kit' - page 53. Increased roll stiffness (30%) for improved handling. Powder coated.		
Shim (Adjusting) *(Use as required)*	(a/r)	**154447**
Bolt *(Anti roll bar mounting)*	(4)	**BH110121**
Washer-Plain	(4)	**GHF302**
Nut-Locking	(4)	**GHF224**

TRAILING ARM & TIE BAR
REAR SUSPENSION

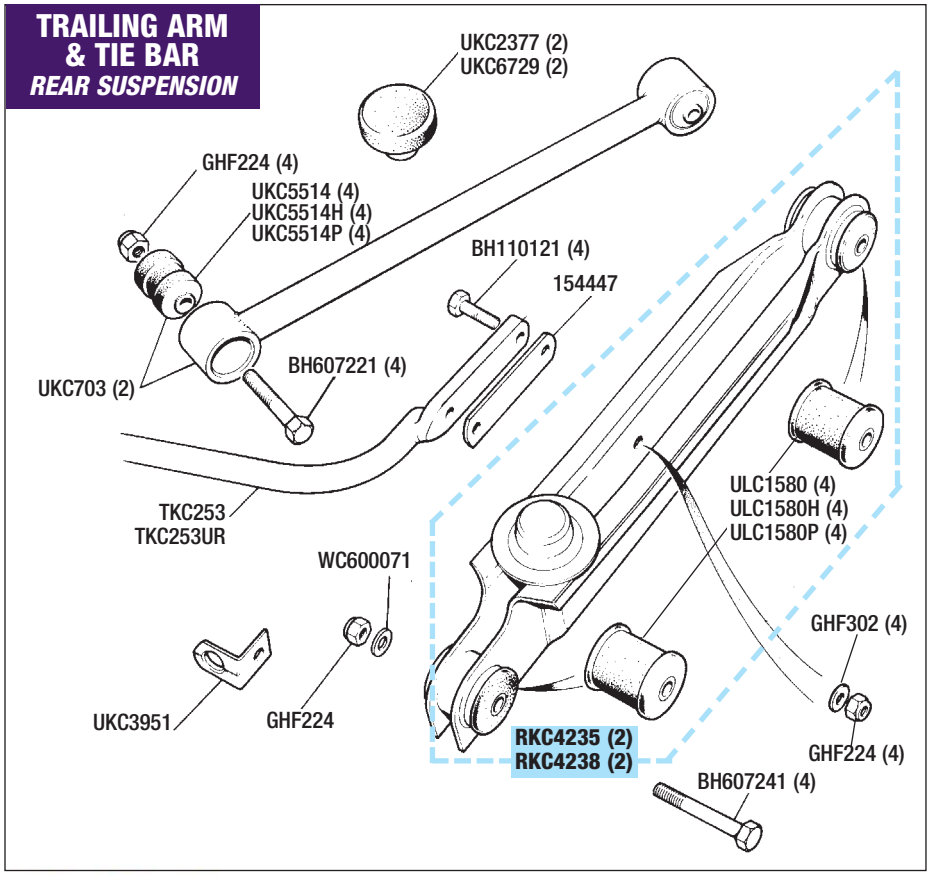

POLYURETHANE BUSHES. AVAILABLE IN KITS OR INDIVIDUALLY.

SHOCK ABSORBER & SPRING
REAR SUSPENSION

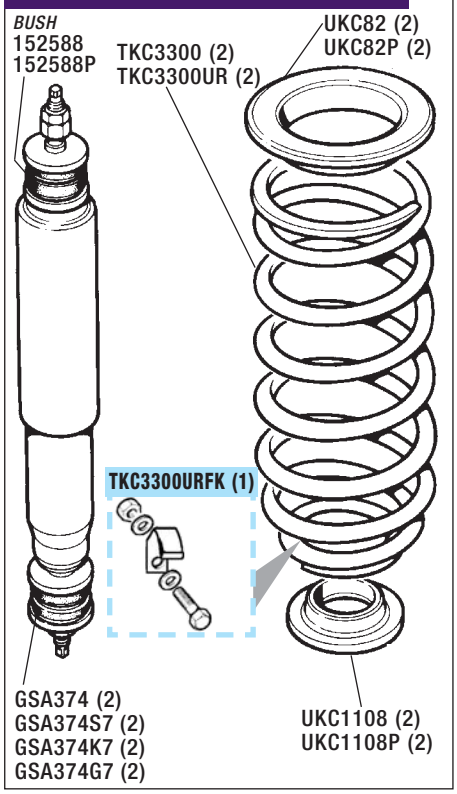

Shock Absorber & Spring

Rear Suspension

Description	Qty Req.	Part No.
Shock Absorber *(Inc bushes); **See also;** Shock Absorber & Spring Packages. SAFETY NOTE: we recommend fitting shock absorbers in pairs.*		
Standard *(each)*	(2)	**GSA374**
Spax *(On car adjustable) (pair)*	(1)	**GSA374S7**
Koni *(Off car adjustable) (pair)*	(1)	**GSA374K7**
Gaz *(On car adjustable) (pair)*	(1)	**GSA374G7**
Bush only *(S/absorber mounting)*		
Standard	(8)	**152588**
Poly	(8)	**152588P**
Rear Spring; *See also; Shock Absorber & Spring Packages.*		
Standard *(fit in pairs)*	(2)	**TKC3300**
Uprated *Uprated to 200lb, 1" lowered ride height. Note: Uprated springs should only be fitted in vehicle sets, 2 front & 2 rear. Rear springs should be fitted with a Retainer Kit (TKC3300URFK) to hold springs in position.*	(2)	**TKC3300UR**
Retainer Kit *(Uprated rear springs) For 2 springs. Kit includes retaining plates/hooks (4 per spring) bolts, nuts & washers.*	(1)	**TKC3300URFK**
Spring Insulator Rubber		
Upper		
Standard	(2)	**UKC82**
Poly	(2)	**UKC82P**
Lower		
Standard	(2)	**UKC1108**
Poly	(2)	**UKC1108P**

REAR SHOCKS & SPRINGS KIT

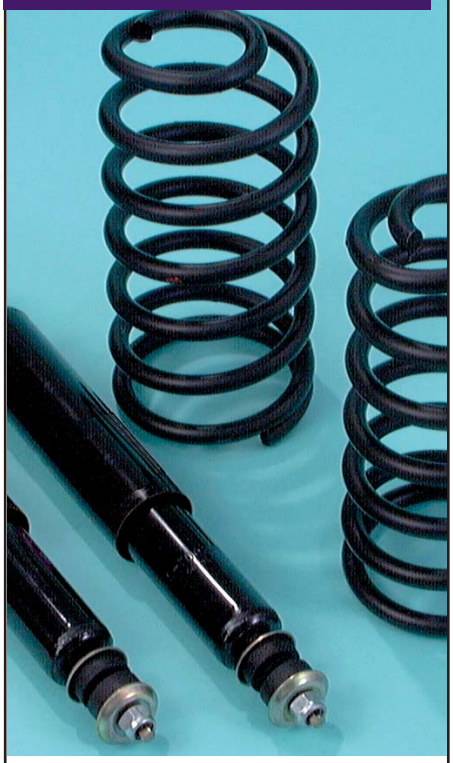

We have assembled these kits to be sold in conjunction with the front leg kits listed on previous page.

Note: Uprated springs should only be fitted in vehicle sets, 2 front & 2 rear. Rear springs should be fitted with a Retainer Kit (TKC3300URFK) to hold springs in position.

REAR SHOCKS AND SPRING KIT (PAIRS)

Standard Shocks & Standard Springs	(1)	**RB2010**
Spax (Adjustable) Shocks & Uprated/Lowered Springs	(1)	**RB2010SPAX**
Koni (Adjustable) Shocks & Uprated/Lowered Springs	(1)	**RB2010KONI**
Gaz (Adjustable) Shocks & Uprated/Lowered Springs	(1)	**RB2010GAZ**

TO ORDER: 01522 568000
www.rimmerbros.co.uk

SUSPENSION PACKAGES

SHOCK ABSORBER & SPRING PACKAGES

STANDARD OR UPRATED SUSPENSION PACKAGE ?	Triumph Standard	SPAX Uprated	SPAX Uprated	KONI Uprated	GAZ SHOCKS Uprated
Our popular Suspension Packs are excellent value for money. • Save money and buy a kit! • Easy to order • Improve handling • Increased safety • Bush & Bolt kits available	FRONT INSERTS WITH REAR SHOCK ABSORBERS	FRONT INSERTS WITH REAR ADJUSTABLE SHOCK ABSORBERS	ADJUSTABLE 'ON CAR' FRONT INSERTS WITH REAR ADJUSTABLE SHOCK ABSORBERS	ADJUSTABLE 'OFF CAR' FRONT INSERTS WITH REAR ADJUSTABLE SHOCK ABSORBERS	ADJUSTABLE 'ON CAR' FRONT INSERTS WITH REAR ADJUSTABLE SHOCK ABSORBERS
Suspension/Package Contents	***ORDER KIT NO***	***ORDER KIT NO***	***ORDER KIT NO***	***ORDER KIT NO***	***ORDER KIT NO***
INSERTS & SHOCK ABSORBERS 2 Front Strut Inserts 2 Rear Shock Absorbers	**RB7059**	**RB7059S**	**RB7059STA2**	**RB7059K**	**RB7059G**
INSERTS & SHOCK ABSORBERS WITH STANDARD SPRINGS 2 Front Strut Inserts 2 Rear Shock Absorbers 4 Standard Road Springs	**RB7696**	**RB7696S**	**RB7696STA2**	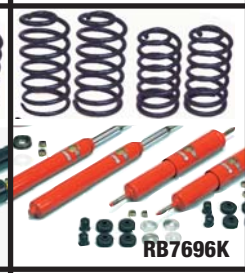 **RB7696K**	**RB7696G**
INSERTS & SHOCK ABSORBERS WITH UPRATED SPRINGS 2 Front Strut Inserts 2 Rear Shock Absorbers 4 Uprated Road Springs *200Lb, ride height lowered 1". Bump stops should be shortened when fitting lowered front springs. Install rear springs with Retaining Kit TKC3300URFK.*	**RB7700**	**RB7700S**	**RB7700STA2**	**RB7700K**	**RB7700G**
INSTALLATION KIT **GAITERS/TIES/SPRING RUBBERS** 2 Front Strut Gaiters 2 Front Gaiter Ties 4 Front Spring Insulator Rubbers* 4 Rear Spring Insulator Rubbers* **Available in rubber or polyurethane material.*	**RB7007**	**RB7007**	**RB7007**	**RB7007**	**RB7007**

ANTI-DIVE KIT

Kit includes 2 aluminium spacer blocks, extra long bolts (& nuts).

Aluminium blocks fit between subframe & front anti-roll bar to increase resistance of car front end 'diving' under heavy braking. For use with standard front anti-roll bar only.

FRONT 'ANTI-DIVE' KIT (1) **RB7100**

Why not fit this Anti-Dive Kit with one of our uprated Suspension packs?

UPRATED FRONT & REAR ANTI-ROLL BAR KIT

Transform the handling of your TR7 or TR8 by fitting a pair of uprated anti-roll bar's. Increased roll stiffness (30%) and powder coated for meaningful apperance. Kit is supplied complete with polyurethane mounting bushes (UKC210 front bushes require reaming out from 19mm to 22.5mm) and mounting kit.

UPRATED FRONT & REAR ANTI-ROLL BAR KIT (1) **RB7695**

Includes front & rear roll bars, polyurethane mounting bush kit and mounting bolt kit.

TR7 SUSPENSION BUSH & BOLT PACKAGES

By ordering our Front/Rear Suspension Bush & Bolt Packs you will have everything you need when over-hauling your TR7 suspension, and save money too!		STANDARD BUSHES	UPRATED BUSHES (HARD)	POLYURETHANE BUSHES
KIT DESCRIPTION	*KIT CONTENTS*	*ORDER KIT NO*	*ORDER KIT NO*	*ORDER KIT NO*
Front/Rear Suspension BUSH KIT A	**Car set.** Less Subframe Mounting Bushes. Includes 2 track arm bushes (CRC1709), 6 anti-rollbar bushes (4 TKC6097 & 2 UKC210), 4 rear trailingarm bushes (ULC1580), & 4 rear tie bar bushes (UKC5514). *Use with Suspension Bolt Kit 'A' (RB7113)*	RB7017	RB7017H	RB7017P
Front/Rear Suspension BOLT KIT A	**Car set.** Bolt set includes all necessary nuts, bolts & washers *To fit Suspension Bush Kit 'A' (RB7017, RB7017H & RB7017P)*	RB7113	RB7113	RB7113
Front/Rear Suspension BUSH KIT B	**Car set.** With Subframe Mounting Bushes. Contents as Bush Kit A (RB7017), but includes 8 subframe bushes (2 159209, 2 UKC307 & 4 155793) *Use with Suspension Bolt Kit 'B' (RB7106)*	RB7126	RB7126H	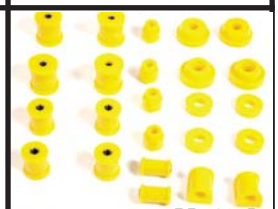 RB7126P
Front/Rear Suspension BOLT KIT B	**Car set.** Bolt set includes all necessary nuts, bolts andwashers as Bolt Kit A (RB7113), but also includes additional subframe bolts, spacers and washers. *To fit Suspension Bush Kit 'B' (RB7126, RB7126H & RB7126P)*	RB7106	RB7106	RB7106
Front Subframe BUSH KIT C	**Car set.** Includes 8 subframe mounting bushes, (2 159209, 2 UKC307 & 4 155793). *Use with Front Subframe Bolt Kit 'C' (RB7025)*	RB7061	RB7061H	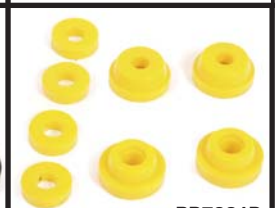 RB7061P
Front Subframe BOLT KIT C	**Car set.** Bolt set includes all necessary nuts, bolts andwashers for front subframe. For kit contents see 'Front Subframe'. *To fit Front Subframe Bush Kit 'C' (RB7061, RB7061H & RB7061P)*	RB7025	RB7025	RB7025
Anti-Roll Bar BUSH KIT E	**Car set.** Includes 2 mounting bushes (UKC210), and 4 end bushes (TKC6097). *Use with Anti-Roll Bar Bolt Kit 'E' (RB7348)*	RB7045	RB7045H	RB7045P
Anti-Roll Bar BOLT KIT E	**Car set.** Bolt set includes all necessary nuts, bolts & washers. For kit contents see Front 'Anti-Roll Bar'. *To fit Anti-Roll Bar Bush Kit 'E' (RB7045, RB7045H & RB7045P)*	RB7348	RB7348	RB7348

TO ORDER: 01522 568000
www.rimmerbros.co.uk

Steel Wheels

Description	Qty Req.	Part No.
Road Wheel-Steel	(5)	**151550**
Steel Road Wheel Set *Inc 4 wheels, 16 nuts & 16 nylon washers.*	(1)	**RB7153**
Wheel Nut *(For use with steel wheels only)*		
Each	(16)	**UKC2198**
Set of 16	(1)	**UKC2198K**
Washer-Nylon *(For use with steel wheels only)*		
Each	(16)	**UKC2199**
Set of 16	(1)	**UKC2199K**
Wheel Stud		
Each	(16)	**UKC2213**
Set of 16	(1)	**UKC2213K**
Wheel Trim/Cover;		
To ACG13000 *(1977)*	(4)	**YKC555**
From ACG13001 *(1977 on)*	(4)	**XKC3296**
Wheel Trim/Centre Badge;		
To ACG13000 *(1977)*	(4)	**YKC1334**
From ACG13001 *(1977 on)*	(4)	**ZKC3120**
Spring *(Trim to wheel)*	(16)	**ZKC476**

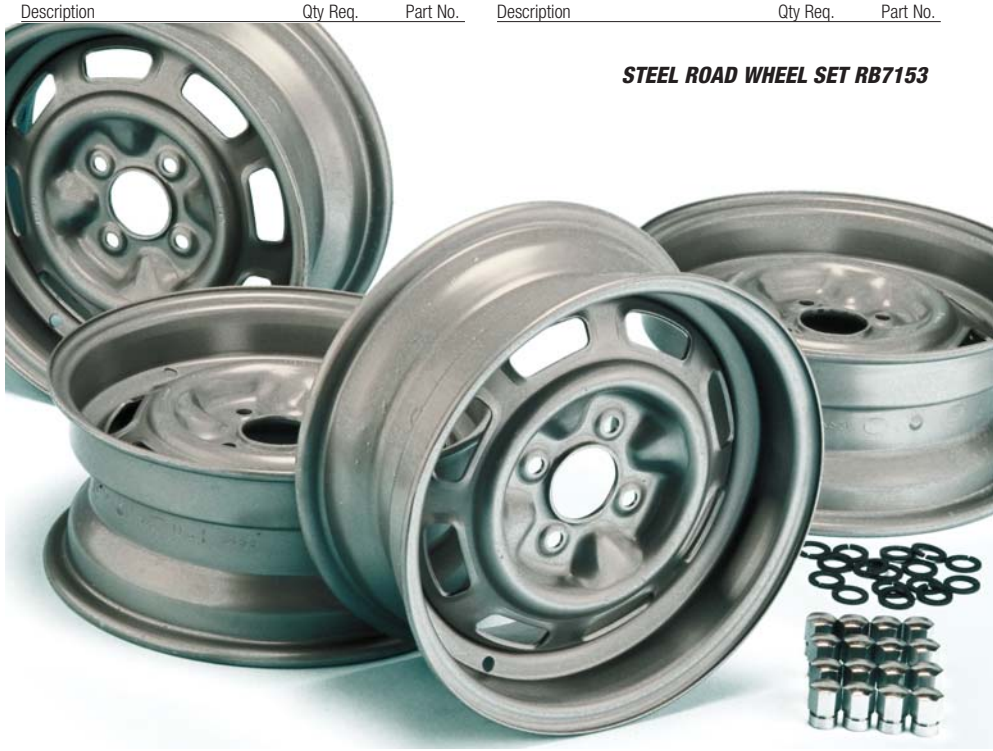

STEEL ROAD WHEEL SET RB7153

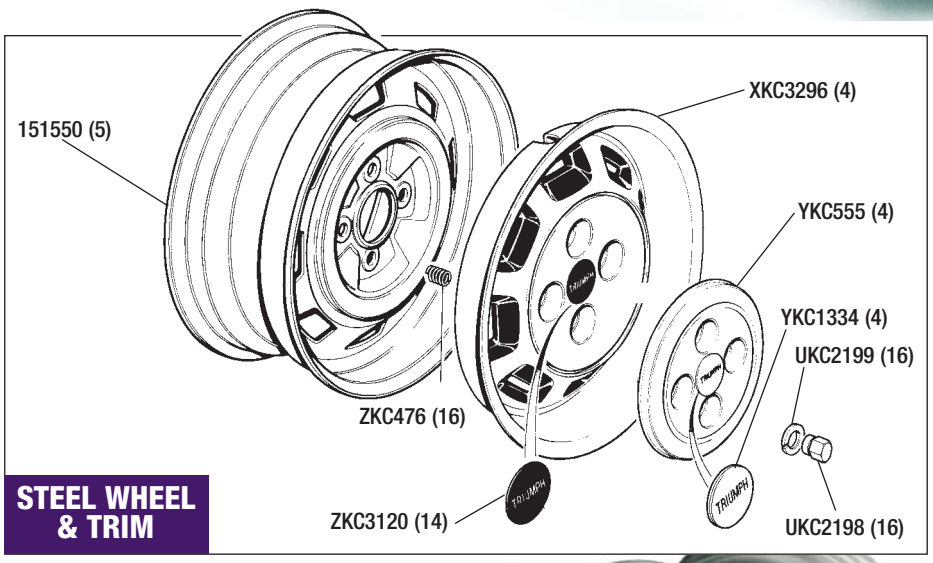

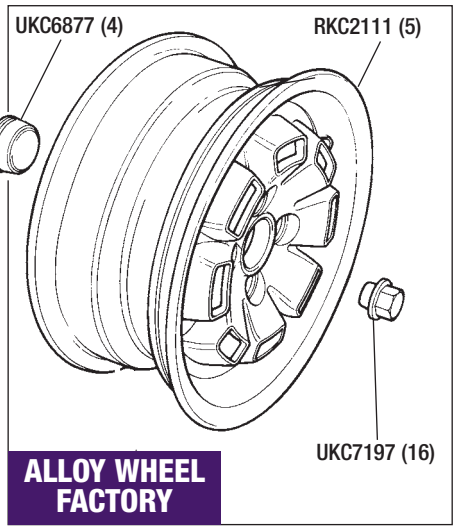

Alloy Wheels Factory

Description	Qty Req.	Part No.
Road Wheel-Alloy	(5)	**RKC2111**
Alloy Road Wheel Set *Inc 5 wheels, 5 wheel centres & 16 nuts.*	(1)	**RB7051**
Alloy Road Wheel Set *Inc 4 wheels, 4 wheel centres & 16 nuts.*	(1)	**RB7359**
Locking Wheel Nut Set *Includes 4 locking wheel nuts.* *For use only with factory Alloy wheel sets.*	(1)	**RB7141**
Wheel Nut *For use with factory Alloy wheels only.*		
Each	(16)	**UKC7197**
Set of 16	(1)	**UKC7197K**
Wheel Centre Cap	(4)	**UKC6877**
Wheel Stud		
Each	(16)	**UKC2213**
Set of 16	(1)	**UKC2213K**
Autoglym 'Clean Wheels' *(300ml)*	(NI)	**RX1322**

SAFEGUARD YOUR BL ALLOY WHEELS WITH OUR LOCKING WHEEL NUTS

FACTORY ALLOY ROAD WHEEL SET RB7359

Description	Qty Req.	Part No.	Description	Qty Req.	Part No.	Description	Qty Req.	Part No.

Alloy Wheels

Minilite Replica

As an attractive alternative to the standard steel wheels or factory alloy wheels, consider a set of Minilite replica Alloy Wheels. Made from aluminium, they fit directly in place of original wheels with corresponding wheel nuts.
Available in silver.

Minilite Replica Wheel Set *(6J x 14")*	(1)	**RB7420**
Set inc 4 wheels, 4 centres & 16 wheel nuts.		
Available in Silver only.		
Minilite Replica Wheel only	(4)	**RB7410**
Wheel Nut only	(16)	**RB7349**
Wheel Centre only *(plain)*	(4)	**RL1472**
Badge - Triumph *(stick-on)*	(4)	**RL1472B**
Autoglym 'Clean Wheels' (300ml)	(A/R)	**RX1322**

WIRE WHEELS (CHROME)

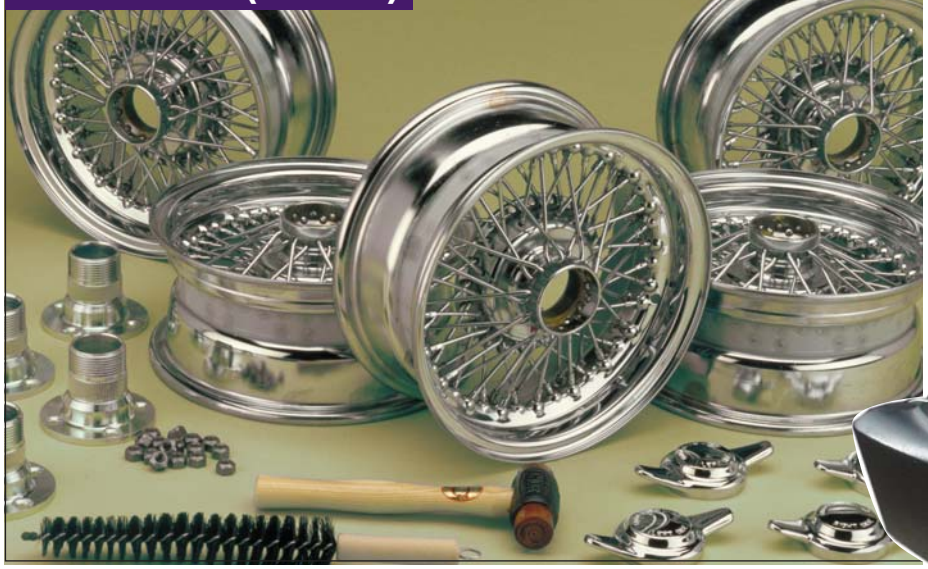

GO ON - BE DIFFERENT!

Why not fit a set of our Chromed Wire Wheels.

Wire wheels are available with either 'Eared' knock caps or 'Octagonal' centre knock caps.

OPTIONAL OCTAGONAL CENTRE LOCK NUTS

Wire Wheels (Chrome)

Chrome Wire Wheel Set with -		
'2 Eared' Chromed Knock Caps	(1)	**RB7005**
Set inc 5 wheels (5.5J x 13"- 60 spoke),		
4 splines, 4 '2 eared' knock caps,		
16 nuts, cleaning brush & hammer.		
Eared caps not allowed in all countries.		
'Octagonal' Chromed Knock Caps	(1)	**RB7383**
Set inc 5 wheels (5.5J x 13"- 60 spoke),		
4 splines, 4 octagonal knock caps,		
16 nuts, cleaning brush & spanner.		

FITTING WIRE WHEELS

When fitting Wire Wheels it is important that you check the length of the wheel studs (and shorten if necessery) to ensure they do not stand proud of the Hub Adaptors and foul the backs of the wheels.
Please read the fitting instructions supplied.

Chrome Wire Wheel	(5)	**XW5729C**
5.5J x 13"- 60 spoke.		
Hub Adaptor/Spline *(Bolt on);*		
Right Hand	(2)	**RSSPR**
Left Hand	(2)	**RSSPL**
Retaining Nuts 'Bevelled'	(16)	**RSRN1215**
For hub adaptor/spline.		
'2 Eared' Centre Knock Cap;		
Eared caps not allowed in all countries.		
Right Hand	(2)	**KC4282R**
Left Hand	(2)	**KC4282L**
'3 Eared' Centre Knock Cap;		
Eared caps not allowed in all countries.		
Right Hand	(2)	**KC4282R-3**
Left Hand	(2)	**KC4282L-3**
'Octagonal' Centre Knock Cap;		
Right Hand	(2)	**KC4280R**
Left Hand	(2)	**KC4280L**
Cleaning Brush	(1)	**KACB101**
Copper/Hide Hammer	(1)	**KACH100**
Spanner *(For 'octagonal' centre nuts)*	(1)	**KAS42**

TO ORDER: 01522 568000
www.rimmerbros.co.uk

Description	Qty Req.	Part No.

Mudflaps

Mudflaps-Front (Plain) *(Pr)*	(1)	**RB7282**
Fitting Kit *(Front)*	(1)	**RB7267**
Mudflaps-Rear (TR7) *(Pr)*	(1)	**RB7292**
Fitting Kit *(Rear)*	(1)	**RB7277**

ROADSIDE TOOLS & TOURING EQUIPMENT

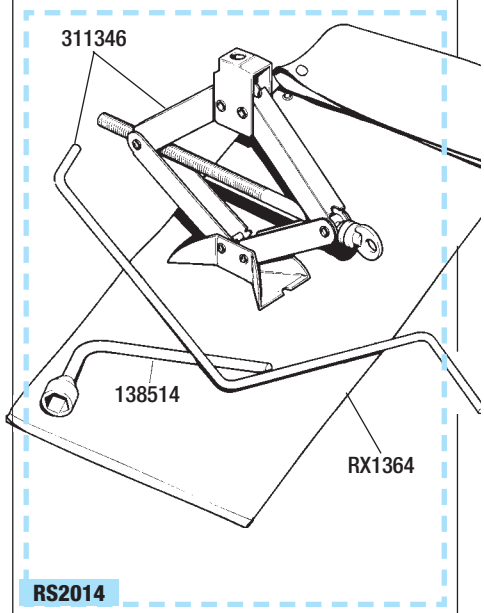

Roadside Tools & Touring Equipment

See also; ***Accessories-Tools.***

'AA' Membership/Relay Pack	(1)	**RX1329**
Tool Kit	(1)	**RS2014**
Comprises of jack, handle, wheel nut brace & tool bag.		
Scissor Jack & Handle	(1)	**311346**
Wheel Nut Brace	(1)	**138514**
Tool Bag *(Hardura)*	(1)	**RX1364**
Tyre Pump	(1)	**523638A**
Spark Plug Spanner	(1)	**GAT140**
'Warning' Triangle	(1)	**RX1344**
Rubber Disposable Gloves	(a/r)	**RX1406**
Pack of 100.		
Lightweight (disposible) Overalls		
Medium	(a/r)	**RX1408M**
Large	(a/r)	**RX1408L**
Extra Large	(a/r)	**RX1408XL**
Safety Jacket (Luminous)	(a/r)	**GAC2999**
Fire Extinguisher	(a/r)	**GAC9904**
First Aid Kit	(a/r)	**RX1399**
WD40 *(Large-400ml)*	(a/r)	**GAC111**
Holts Radweld *(250ml)*	(1)	**RX1508**
Hylomar Gasket Sealant *(Tube)*	(1)	**GGC102**

Touring Kits

Breakdown/Touring Kits; *(TR7 only)*
Kits include; *plugs, points, condenser, distributor cap, rotor arm, accelerator cable, fan belt, head gasket set, all radiator hoses, pressure cap (expansion tank), clutch master & slave cyl repair kits, and emergency bulb kit.*

Vehicles 1975-1978	(1)	**RB7079**
All ACG commission numbers fitted with Plastic expansion bottle.		
Vehicles 1978 to 1979	(1)	**RB7110**
All TCG commission numbers fitted with Steel (Rh mounting) Header Tank.		
Vehicles 1979 & Future	(1)	**RB7123**
All vehicles from VIN 200001 fitted with Steel (Lh mounting) Header Tank.		

WHEN UNDERTAKING A LONG JOURNEY, CARRY ONE OF OUR TOURING KITS.

PHOTO SHOWS CONTENTS OF A TYPICAL TOURING KIT.

TR7 Front Brakes

Standard System
See also; *Front Uprated Brake Kit on following page.*

Description	Qty Req.	Part No.
TR7 Brake Disc;		
Standard (each)	(2)	**TKC780**
Uprated EBC Turbo Groove *(pair)*	(1)	**TKC780UR**
Bolt *(Disc to hub)*	(8)	**UKC4817**
TR7 Brake Pad Kit; *Includes 4 pads, 4 shims, 2 clips & 4 pins.*		
Standard	(1)	**GBP281K**
Uprated Green Stuff (Kevlar)	(1)	**GBP281GSK**
TR7 Brake Pad Set; *Includes 4 brake pads only.*		
Standard	(1)	**GBP281**
Uprated Green Stuff (Kevlar)	(1)	**GBP281GS**
Pad Shim Kit *(anti-squeal)* *Includes 4 brake pad shims.*	(1)	**RB7128**
Pad Clip Kit *(anti-rattle)* *Includes 2 brake pad retaining clips.*	(1)	**RB7039**
Pad Pin Kit *Includes 4 brake pad retaining pins.*	(1)	**GBK1010**
TR7 Front Brake Kit; *Includes 2 discs TKC780 & pad set GBP281.*		
Standard TR7 Discs/Pads	(1)	**RB7164**
Uprated TR7* Discs/Pads	(1)	**RB7164UR**
TR7 Front/Rear Brake Kit; *Includes 2 discs TKC780, pad set GBP281, and rear brake shoes.*		
4 speed & Early Automatic *Automatics to VIN402000.*		
Standard TR7	(1)	**RB7134**
Uprated TR7* Discs/Pads *Standard shoes.*	(1)	**RB7134UR**
5 speed & Late Automatic *Automatics from VIN402001.*		
Standard TR7	(1)	**RB7076**
Uprated TR7* Discs/Pads *Standard shoes.*	(1)	**RB7076UR**
**Comprise grooved/dimpled TR7 discs & Kevlar pads (see panel).*		
Brake Caliper; Right Hand		
New	(1)	**RTC1380**
Reconditioned	(1)	**RTC1380R**
Left Hand		
New	(1)	**RTC1379**
Reconditioned	(1)	**RTC1379R**
Piston-Caliper	(4)	**RB7185**
Caliper Repair Kit *Kits are per caliper.*	(2)	**GRK5008**
Brake Pipe Kit (Copper); *Car set includes all brake pipes fully made-up to correct length.*		
RHD Vehicles	(1)	**RB7146**
LHD Vehicles	(1)	**RB7140**
Brake Hoses (Flexible);		
Standard	(2)	**GBH418**
Stainless Steel (Braided) *For brake hose Lock-nuts, refer to 'Brake Hydraulic System'.*	(2)	**GBH418GR**
Bleed Nipple	(2)	**RTC1466A**
Bolt *(Caliper mounting);*		
Upper *(Long bolt)*	(2)	**UKC9572**
Lower *(Short bolt)*	(2)	**UKC9571**
Washer-Spring	(4)	**WL112001**
Spacer	(4)	**UKC1146**
Brake Fluids;		
Standard (Dot 3) *(1 Litre)*	(a/r)	**GBF103**
Silicone *(0.5 Litre)*	(a/r)	**RX1327**
Silicone *(1 Litre)*	(a/r)	**RX1326**
Brake Cleaner *(Unipart-aerosol)*	(a/r)	**GBF901**

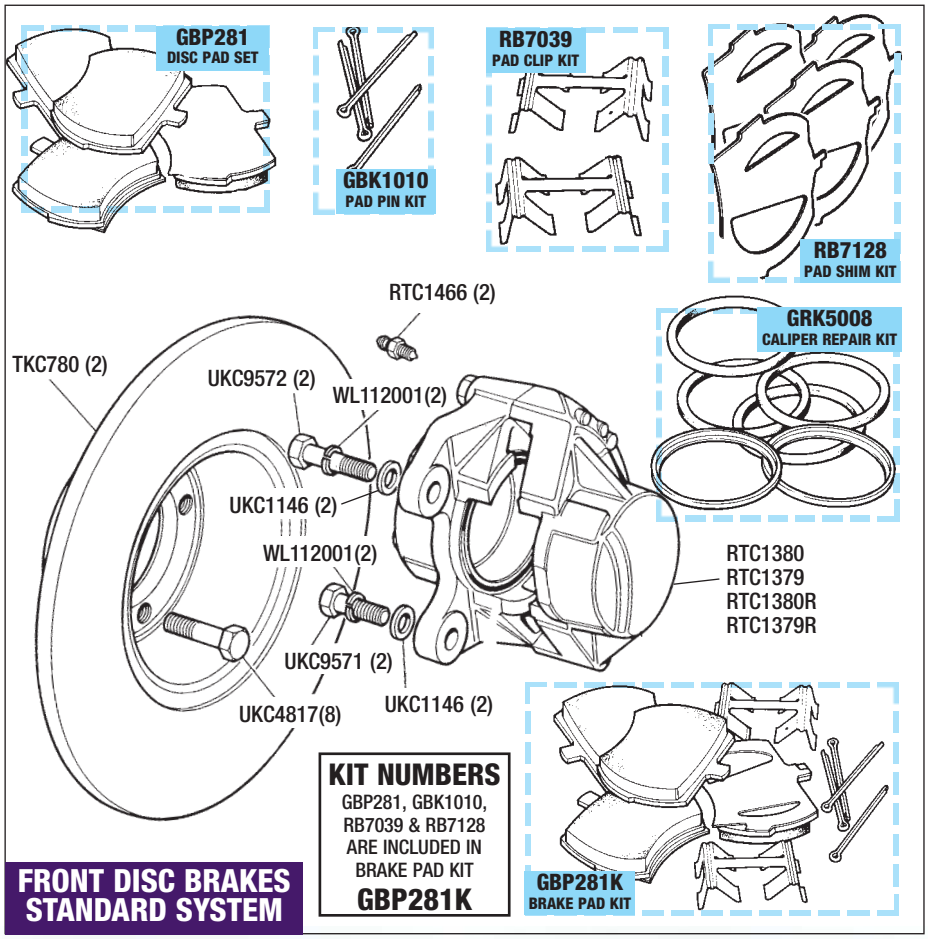

KIT NUMBERS
GBP281, GBK1010, RB7039 & RB7128 ARE INCLUDED IN BRAKE PAD KIT
GBP281K

FRONT DISC BRAKES STANDARD SYSTEM

UPRATED TR7 DISCS & PADS

If you wish to uprate your standard TR7 brakes, purchase these handed discs (lh/rh) with curved grooves and dimples to offer superb stopping power when combined with the Kevlar 'Green Stuff' pads.
See also; *'Stainless Steel Braided Brake Hoses' for a firmer brake pedal!*

Uprated Brake Discs (pair)	(1)	**TKC780UR**
'Green Stuff' Kevlar Pads		
Pads only	(1)	**GBP281GS**
Pads & Fittings	(1)	**GBP281GSK**

STANDARD FRONT/REAR BRAKE KIT

TO ORDER: 01522 568000
www.rimmerbros.co.uk

Description Qty Req. Part No. Description Qty Req. Part No. Description Qty Req. Part No.

UPRATED BRAKE KIT (FRONT)

We now supply one type of front Uprated Brake Kit (RB7117) for all TR7 & TR8 conversion applications. This utilises large calipers derived from the Rover SD1 Vitesse and adapted for use with special vented brake discs suitable for mounting to the 4-stud TR7 hub. This kit **cannot** be used with standard TR7 (13") wheels because of insufficient running clearance inside the wheel due to the larger calipers. It is therefore necessary to fit a minimum 14" diameter wheel (see 'Roadwheels' for details on our Minilite Replica Wheel Sets) with this kit.

For our long standing customers who have previously purchased an uprated brake kit (solid or vented) using the smaller 4 - pot calipers (RB7090 or RB7137) - retaining the 13" wheels - then we still supply service items for these kits (eg discs, pads, caliper repair kit etc) as listed below.

UPRATED BRAKE KIT

This kit is comprised of components derived from the Rover Vitesse, adapted to fit the standard TR7 4-stud hub, it includes: 2 vented brake discs, 2 large '4-pot' calipers, brake pads, 2 braided brake hoses, fittings & instructions.

Uprated Brake Kit (1) **RB7117**

This kit cannot be used with standard 13" TR7 wheels, minimum 14" wheels must be used for internal clearance.
See Road Wheels section for details of 14" Minilite (Replica) wheel sets.

See also; ***Service Items-Uprated Brake Kits***

BRAKE PAD SURFACE AREA COMPARISON

THIS IS A GOOD REASON TO FIT UPRATED BRAKES.

SERVICE ITEMS FOR RIMMER BROS UPRATED BRAKE KITS

For our long standing customers who have previously purchased an Uprated Brake Kit (solid or vented) using the smaller 4 - pot calipers (RB7090 or RB7137) - retaining the 13" wheels - then we still supply service items as listed below.
Additionally, service items for our Uprated Brake Kit (RB7117) are also available.

Brake Pad Set;
- For Brake Kits RB7090 & RB7137
  - Standard Material (1) **RB7124**
  - Uprated 'Green Stuff' (Kevlar) (1) **RB7124GS**
- For Brake Kit RB7117
  - Standard Material (1) **GBP267**
  - Uprated 'Green Stuff' (Kevlar) (1) **GBP267GS**

Brake Disc (Replacement);
- Solid Disc *(For Kit RB7090)* (2) **RB7090A**
- Vented Disc *(For Kit RB7137)* (2) **RB7137A**
- Vented Disc *(For Kit RB7117)* (2) **RB7117A**

Pad Clip Kit *(anti-rattle);*
Includes 4 brake pad retaining clips.
- For Brake Kit RB7090 (1) **RB7176**
- For Brake Kit RB7137 (1) **RB7189**
- For Brake Kit RB7117 (1) **RB7196**

Pad Pin Kit *(Pad securing);*
Includes 4 brake pad retaining pins.
- For Brake Kit RB7090 (1) **RB7177**
- For Brake Kit RB7137 (1) **RB7190**
- For Brake Kit RB7117 (1) **RB7197**

Anti-Squeal Shims (4) **RX1409**
Stick-on type. Cut to fit.

Copaslip Slip *(85g Tube)* (1) **RX1345**

Caliper Repair Kit;
Kits are per caliper.
- For Brake Kits RB7090 & RB7137(2) **RB7159**
- For Brake Kit RB7117 (2) **AEU1547**

Caliper Piston;
4 pistons per caliper.
- For Brake Kits RB7090 & RB7137(4) **RB7086**
- For Brake Kit RB7117 (4) **606683**

Bleed Screw (Caliper) (6) **RTC1526**
Fits all 4 - pot calipers.

OTHER RECOMMENDED UPRATED BRAKING IMPROVEMENTS

UPRATED BRAKE MASTER CYLINDER & SERVO RB7656

Uprated Brake Master Cylinder and Servo Assy (1) **RB7656**
Modified Rover servo to fit TR7/8.

Brake Hoses - Stainless Steel Braided;
For firmer brake pedal pressure.
- Front Flexible Hose *(each)* (2) **GBH418GR**
- Rear Flexible Hose (1) **GBH219GR**
- Car Set of 3 (1) **RB2011**

Wheel Cylinder (2) **GWC1213**
When fitted to 5 speed & late automatic vehicles, this cylinder will increase rear braking power, due to smaller (than standard) internal diameter.

BRAIDED BRAKE HOSES (CAR SET) RB2011

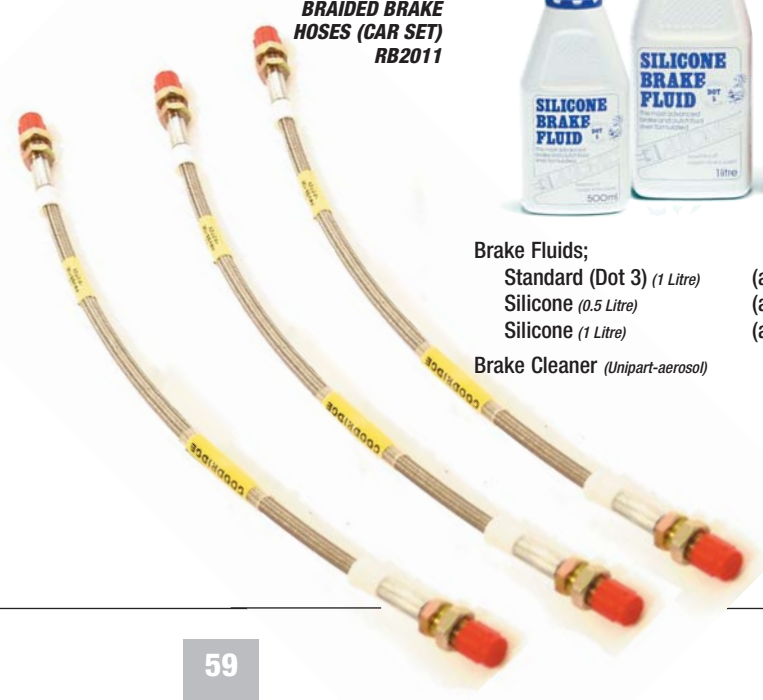

Brake Fluids;
- Standard (Dot 3) *(1 Litre)* (a/r) **GBF103**
- Silicone *(0.5 Litre)* (a/r) **RX1327**
- Silicone *(1 Litre)* (a/r) **RX1326**

Brake Cleaner *(Unipart-aerosol)* (1) **GBF901**

Rear Drum Brakes

4 SPEED & EARLY AUTOMATIC

Automatics to VIN402000.
8" x 1½"

Description	Qty Req.	Part No.
Brake Drum;		
New	(2)	GDB101
Reconditioned	(2)	GDB101R
Screw *(Drum retaining)*	(4)	V5435
Back Plate (Rh)	(1)	RTC1524
(Lh)	(1)	RTC1525
Bolt *(Backplate to axle)*	(8)	ATJ6590
Washer-Spring *(For ATJ6590)*	(8)	GHF332
Nut *(For ATJ6590)*	(8)	GHF201
Brake Shoe Set *(Per car)*	(1)	GBS794
Front/Rear Brake Kit *Includes 2 discs TKC780, pad set GBP281, and rear brake shoes GBS794.*		
Standard	(1)	RB7134
Uprated TR7 Discs/Pads *Standard Shoes.*	(1)	RB7134UR
Brake Shoe Adjusting Kit	(1)	AAU8992
Springs *(Brake shoe Pull-Off)*;		
Upper *(Single coil)*	(2)	RTC1460
Lower *(Twin coil)*	(2)	RTC1461
Pin *(Brake shoe retaining)*	(4)	120124
Spring *(For 120124)*	(4)	504877
Cup/Seat *(For 120124)*	(4)	17H4374
Brake Shoe Retaining Kit *Per car & includes; 4 pins, 4 springs & 4 cup/seat.*	(1)	RB7400
Operating Lever-Handbrake (Rh)	(1)	AAU3960
(Lh)	(1)	AAU3961
'Bias' Spring (Rh)	(1)	RTC1455
(Lh)	(1)	RTC1456
Wheel Cylinder *Inc retaining circlip & bleed nipple.*	(2)	GWC1213
Cylinder Repair Kit *(Kit is per cylinder)*	(2)	GRK2014
Gasket *(Cylinder to back plate)*	(2)	37H4642
Rubber Plug *(Backplate)*	(2)	RTC1462
Circlip *(Cylinder to backplate)*	(2)	17H7949
Bleed Screw	(2)	RTC1526A
Dust Cover	(2)	17H8057
Brake Hose *(Flexible)*;		
Standard	(1)	GBH219
Stainless Steel (Braided)	(1)	GBH219GR
Nut-Locking *(For brake hose)*	(1)	FAM3658
Washer-Shakeproof	(1)	WE110001
Washer-Flat	(1)	WB110061
Brake Fluids;		
Standard (Dot 3) *(1 Litre)*	(a/r)	GBF103
Silicone *(0.5 Litre)*	(a/r)	RX1327
Silicone *(1 Litre)*	(a/r)	RX1326
Brake Cleaner *(Unipart-aerosol)*	(a/r)	GBF901

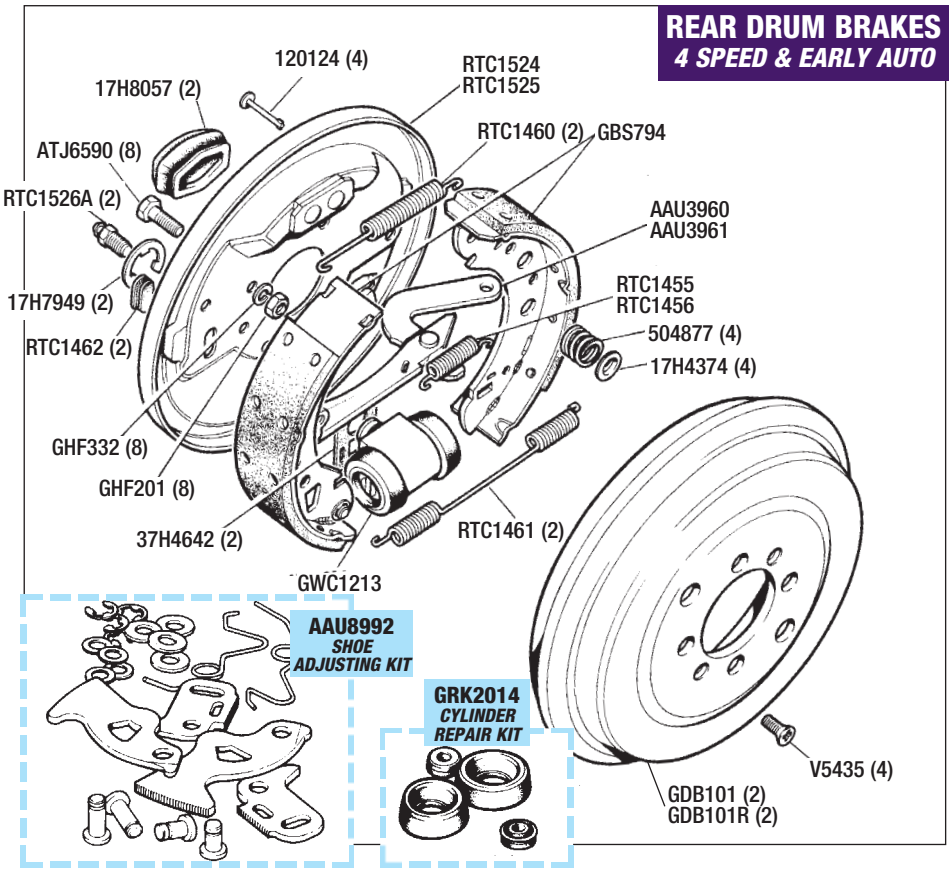

5 SPEED & LATE AUTOMATIC

Automatics from VIN402001.
9" x 1¾"

Description	Qty Req.	Part No.
Brake Drum;		
New	(2)	RKC1818
Reconditioned	(2)	RKC1818R
Screw *(Drum Retaining)*	(2)	800007
Back Plate (Rh)	(1)	AAU2214
(Lh)	(1)	AAU2215
Bolt *(Backplate to axle)*	(8)	SH110281
Nut *(For SH110281)*	(8)	GHF233
Brake Shoe Set *(Per car)*	(1)	GBS813
Front/Rear Brake Kit *(Standard) Includes 2 discs TKC780, pad set GBP281, and rear brake shoes GBS813.*		
Standard TR7	(1)	RB7076
Uprated TR7 Discs/Pads *Standard Shoes.*	(1)	RB7076UR
Brake Shoe Adjusting Kit	(1)	AAU8994
Spring *(Brake shoe Pull-Off)*;		
Upper (Rh)	(1)	AAU6241
(Lh)	(1)	AAU6242
Tension Spring	(2)	AAU6247
Spring - Lower *(Brake shoe Pull-Off)*;	(2)	AAU2210
Pin *(Brake shoe retaining)*	(4)	518724
Spring *(For 518724)*	(4)	606747A
Cup/Seat *(For 518724)*	(4)	27H8426

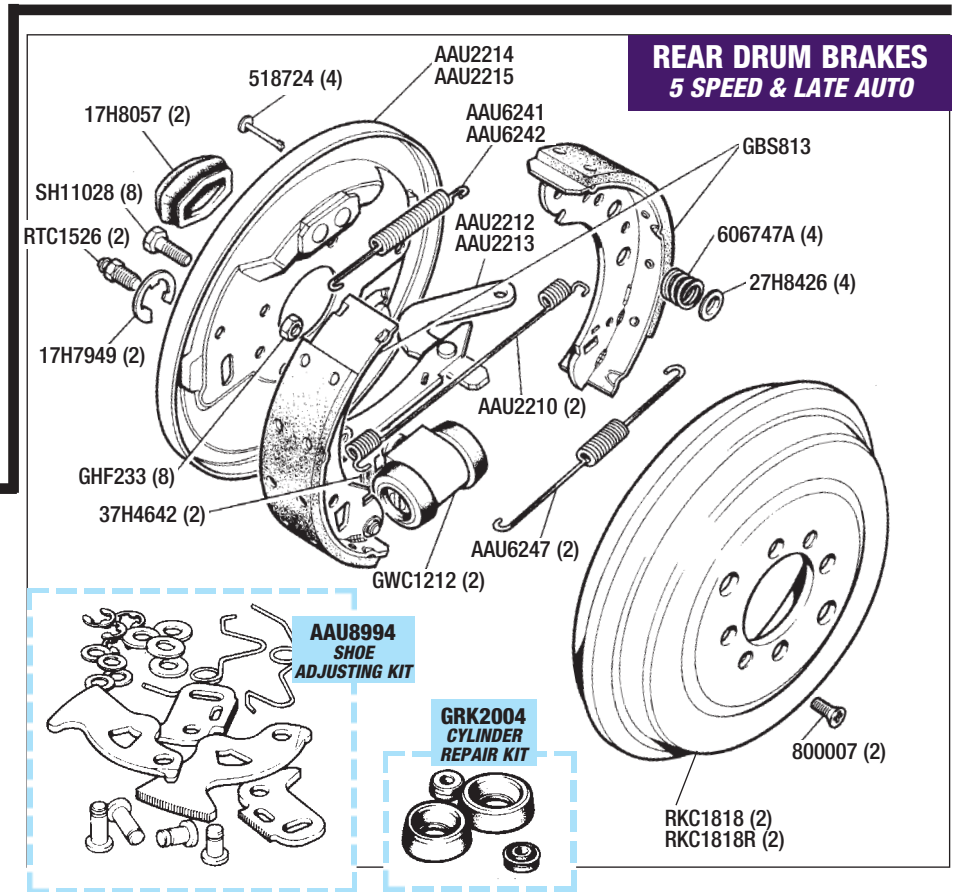

Description	Qty Req.	Part No.
Brake Shoe Retaining Kit *Per car & includes; 4 pins, 4 springs & 4 cup/seat.*	(1)	RB7274
Operating Lever-Handbrake (Rh)	(1)	AAU2212
(Lh)	(1)	AAU2213
Wheel Cylinder *Inc retaining circlip & bleed nipple.*	(2)	GWC1212
Cylinder Repair Kit *Kit is per cylinder.*	(2)	GRK2004
Gasket *(Cylinder to back plate)*	(2)	37H4642
Circlip *(Cylinder to back plate)*	(2)	17H7949
Bleed Screw	(2)	RTC1526A
Dust Cover	(2)	17H8057
Brake Hose *(Flexible)*;		
Standard	(1)	GBH219
Stainless Steel (Braided)	(1)	GBH219GR
Nut-Locking *(For brake hose)*	(1)	FAM3658
Washer-Shakeproof	(1)	WE110001
Washer-Flat	(1)	WB110061
Brake Fluids;		
Standard (Dot 3) *(1 Litre)*	(a/r)	GBF103
Silicone *(0.5 Litre)*	(a/r)	RX1327
Silicone *(1 Litre)*	(a/r)	RX1326

TO ORDER: 01522 568000
www.rimmerbros.co.uk

Description | Qty Req. | Part No.

BRAKE PEDAL & MOUNTING

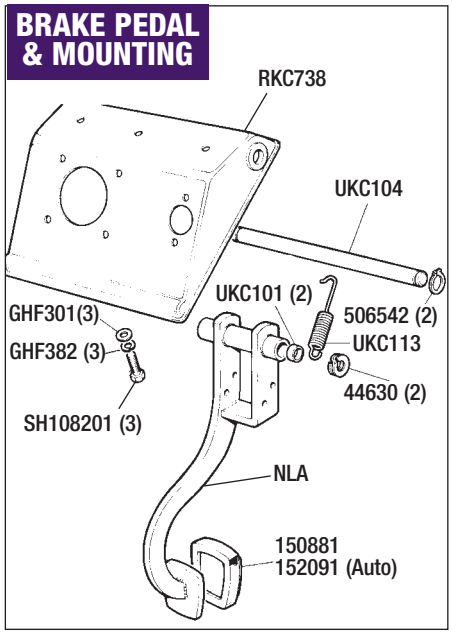

Brake Pedal & Mounting

Housing-Pedal *(RHD Vehicles)*	(1)	**RKC738**
Cross Shaft	(1)	**UKC104**
Circlip	(2)	**506542**
Bush-Cross Shaft	(2)	**UKC101**
Locking Washer/Clip	(2)	**44630**
Return Spring-Pedal	(1)	**UKC113**
Setscrew	(3)	**SH108201**
Washer-Spring	(3)	**GHF382**
Washer-Flat	(3)	**GHF301**
Pedal Pad/Rubber;		
Manual	(1)	**150881**
Automatic	(1)	**152091**
Brake Light Switch	(1)	**134529**
Nut-Switch Locking	(1)	**GHF213**
Washer *(For GHF213)*	(1)	**WA112081**

Description | Qty Req. | Part No.

BRAKE SERVO UNIT

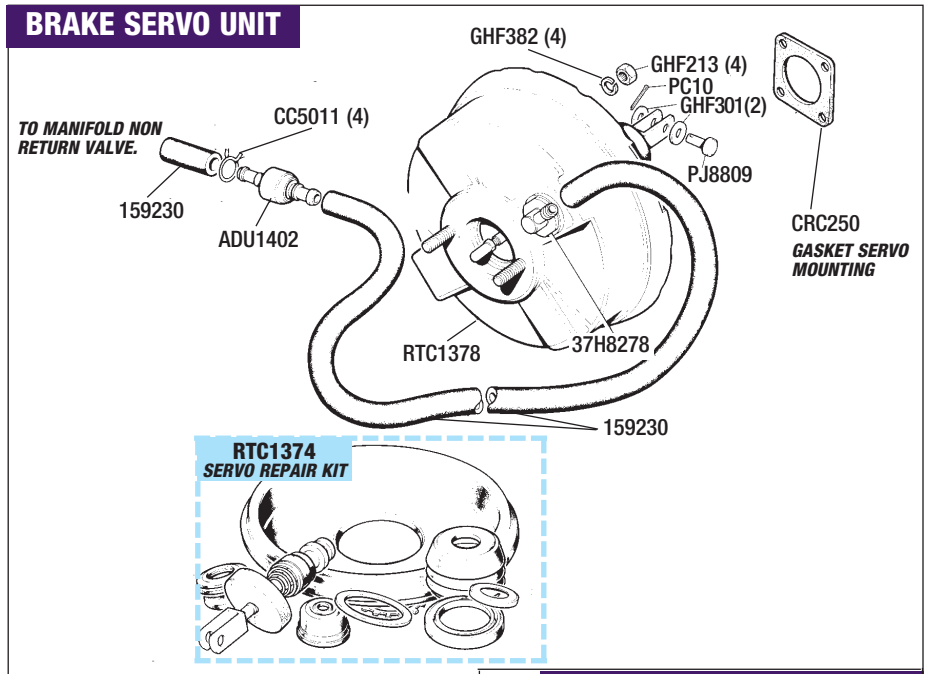

Brake Master Cylinder & Brake Servo Unit

BRAKE MASTER CYLINDER

Brake Master Cylinder *(Includes filler cap)*		
Standard	(1)	**GMC217**
Uprated (inc servo)	(1)	**RB7656**
Filler Cap		**513123A**
Switch - 'Pressure Failure'	(1)	**AAU2454**
Master Cylinder Repair Kit	(1)	**GRK1004**
Nut *(Master cyl mounting)*	(2)	**GHF201**
Washer-Locking *(For GHF201)*	(2)	**GHF332**
Brake Fluids;		
Standard (Dot 3) *(1 Litre)*	(a/r)	**GBF103**
Silicone *(0.5 Litre)*	(a/r)	**RX1327**
Silicone *(1 Litre)*	(a/r)	**RX1326**

Description | Qty Req. | Part No.

BRAKE MASTER CYLINDER

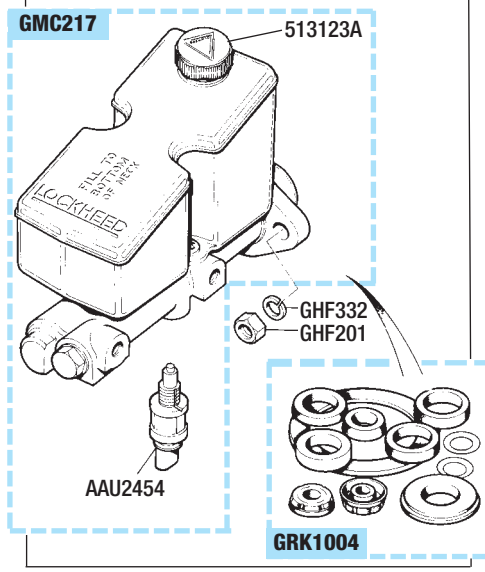

BRAKE SERVO UNIT

Servo Unit		
Standard	(1)	**RTC1378**
Uprated *(inc B/M cylinder)*	(1)	**RB7656**
Non-Return Valve *(Servo)*	(1)	**37H8278**
Servo Repair Kit	(1)	**RTC1374**
Gasket *(Servo mounting)*	(1)	**CRC250**
Nut *(Servo mounting)*	(4)	**GHF213**
Washer-Locking *(For GHF213)*	(4)	**GHF382**
Clevis Pin	(1)	**PJ8809**
Washer-Flat	(2)	**GHF301**
Split Pin	(1)	**PC10**
Hose *(Servo to inlet manifold)*	(1)	**159230**
Non-Return Valve *(Inlet manifold)*	(1)	**ADU1402**
Clip-Hose	(4)	**CC5011**
Brake Fluids;		
Standard (Dot 3) *(1 Litre)*	(a/r)	**GBF103**
Silicone *(0.5 Litre)*	(a/r)	**RX1327**
Silicone *(1 Litre)*	(a/r)	**RX1326**

SILICONE BRAKE FLUID

Unlike normal brake fluids, Silicone fluid does not absorb moisture, so avoiding corrosion in the system. Under strenuous braking conditions it tends not to 'Boil', and it does not harm paintwork if spilt. Note; before filling with Silicone brake fluid, the entire brake hydraulic system should be flushed out.

FLUIDS SHOULD ALSO BE CHANGED!

Brake Hydraulic System

Pipes/Hoses/Valve (All Models)

Although we have illustrated the brake hydraulic system (to show the pipe/hose arrangement, and how it relates to the vehicle), we generally only supply brake pipes as complete kits, which are listed here.

FRONT BRAKE PIPES & HOSES

Description	Qty Req.	Part No.
Brake Pipe Kit *(Copper);* *Car set; includes all brake pipes fully made-up to correct length.*		
RHD Vehicles	(1)	**RB7146**
LHD Vehicles	(1)	**RB7140**
'Pressure Reducing' Valve	(1)	**TKC3667**
Bracket *(Valve Mounting)*	(1)	**UKC3550**
Bolt *(Bracket mounting)*	(1)	**BH108111**
Washer-Flat	(2)	**GHF312**
Washer-Spring	(1)	**GHF382**
Nut		**GHF213**
Brake Hoses-Front *(Flexible);*		
Standard	(2)	**GBH418**
Stainless Steel (Braided)	(2)	**GBH418GR**
Nut-Locking *(For brake hose)*	(2)	**FAM3658**
Washer-Shakeproof	(2)	**WE110001**
Washer-Flat	(2)	**WB110061**
Grommet *Located in body to Protect pipes.*	(2)	**UKC4498**
Clip-Brake Pipe* *(Double)*	(a/r)	**625521**
Clip-Brake Pipe* *(Single)* **Use as required.*	(a/r)	**GHF1192**
Brake Fluids;		
Standard (Dot 3) *(1 Litre)*	(a/r)	**GBF103**
Silicone *(0.5 Litre)*	(a/r)	**RX1327**
Silicone *(1 Litre)*	(a/r)	**RX1326**
Brake Cleaner *(Unipart-aerosol)*	(a/r)	**GBF901**

REAR BRAKE PIPES & HOSE

Description	Qty Req.	Part No.
Brake Pipe Kit *(Copper);* *Car set; includes all brake pipes fully made-up to correct length.*		
RHD Vehicles	(1)	**RB7146**
LHD Vehicles	(1)	**RB7140**
Brake Hose-Rear *(Flexible);*		
Standard (1)		**GBH219**
Stainless Steel (Braided)	(1)	**GBH219GR**
Nut-Locking *(For brake hose)*	(1)	**FAM3658**
Washer-Shakeproof	(1)	**WE110001**
Washer-Flat	(1)	**WB110061**
Clip-Brake Pipe *Clip is fixed to floor pan.*		**ZKC925**
Clip-Brake Pipe (Double)	(a/r)	**625521**
Clip-Brake Pipe (Single)	(a/r)	**GHF1192**
Pipe Connector *(Female/Female)* *If fitted.*	(1)	**UKC8430**
Brake Fluids;		
Standard (Dot 3) *(1 Litre)*	(a/r)	**GBF103**
Silicone *(0.5 Litre)*	(a/r)	**RX1327**
Silicone *(1 Litre)*	(a/r)	**RX1326**
Brake Cleaner *(Unipart-aerosol)*	(a/r)	**GBF901**

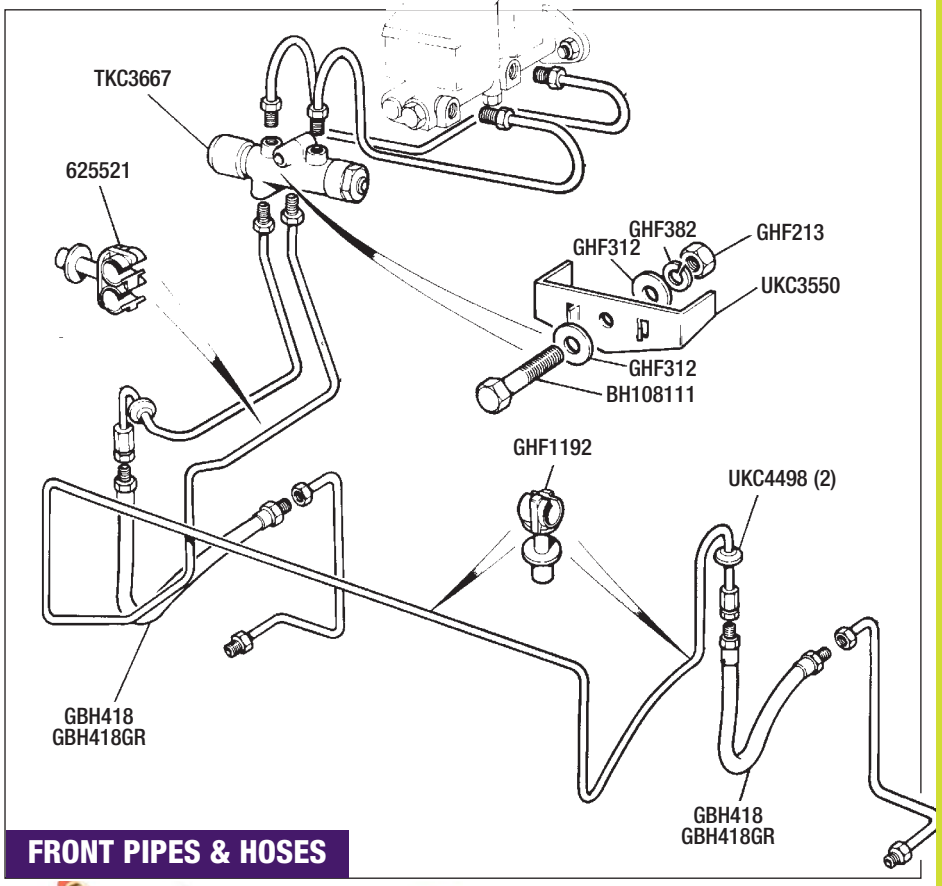

FRONT PIPES & HOSES

BRAIDED BRAKE HOSES (CAR SET) RB2011

INC 3 STAINLESS STEEL BRAIDED HOSES

REAR PIPES & HOSES

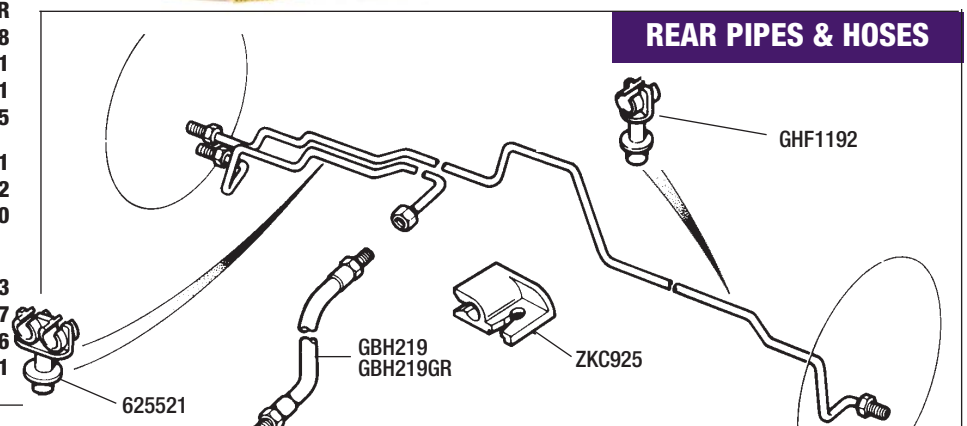

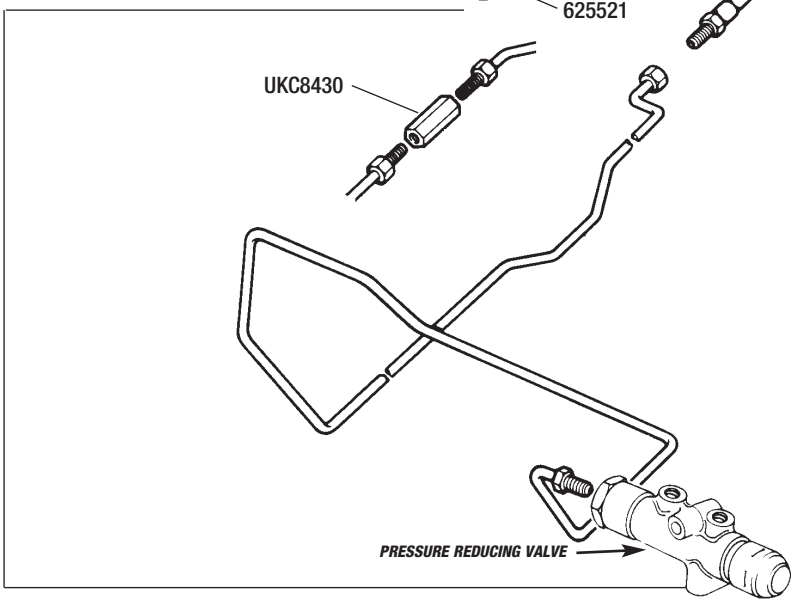

BRAKE PIPE KIT, BRAKE CLEANER & FLEXIBLE HOSES.

TO ORDER: 01522 568000
www.rimmerbros.co.uk

Handbrake & Cables

HANDBRAKE ASSEMBLY

Description	Qty Req.	Part No.
Handbrake Assembly	(1)	UKC3740
Hand Grip	(1)	UKC3918
Gaiter *(See photo)*		
Black	(1)	YKC3166PA
Navy Blue	(1)	YKC3166JJ
Golden Tan	(1)	YKC3166AM
Beige	(1)	YKC3166AA
Switch *(Handbrake warning)* *See also ELECTRICAL.*	(1)	144432
Screw *(Self tapping-for switch)*	(1)	AB604021
Connecter *(Lever to cable)*	(1)	UKC89
Clevis Pin	(1)	PJ8806
Washer-Flat	(1)	GHF301
Split Pin	(1)	PC34

HANDBRAKE CABLE *(All Models)*

Description	Qty Req.	Part No.
Handbrake Cable;		
4 speed & Early Automatic* **Automatics to VIN402000.*	(1)	TKC3619
5 speed & Late Automatic* **Automatics from VIN402001.*	(1)	TKC2735
Nut-Locking	(3)	GHF201
Fork-Cable End	(2)	152251
Nut-Locking *(Cable end)*	(2)	NQ2708
Handbrake Compensator Kit *Includes items marked +.*	(1)	RB7154
Compensator Lever+ *(Upper)*	(1)	21H5253
Bolt-Shouldered+ *(Fulcrum)*	(1)	UKC174
Washer/Spacer+	(1)	WD600071
Bush+ *(For fulcrum bolt)*	(1)	FAM320
Compensator Lever+ *(Lower)*	(1)	21H5254
Washer-Flat+ *(For UKC174 bolt)*	(1)	GHF301
Nut-Locking+ *(For UKC174 bolt)*	(1)	GHF232
Setscrew+	(1)	SH106201
Nut+	(1)	NY106041
Washer-Flat+	(1)	GHF300
Clevis Pin;		
4 speed & Early Automatic* **Automatics to VIN402000.*	(2)	PJ8808
5 speed & Late Automatic* **Automatics from VIN402001.*	(2)	PJ8807
Washer-Flat	(2)	GHF301
Split Pin	(2)	PC10
Nut-Locking	(1)	GHF201
Mounting Plate	(1)	150993
Gaiter *Protects cable/connecter.*	(1)	UKC5278
Setscrew *(mounting plate)*	(4)	SH106201
Washer-Locking	(4)	WL106001

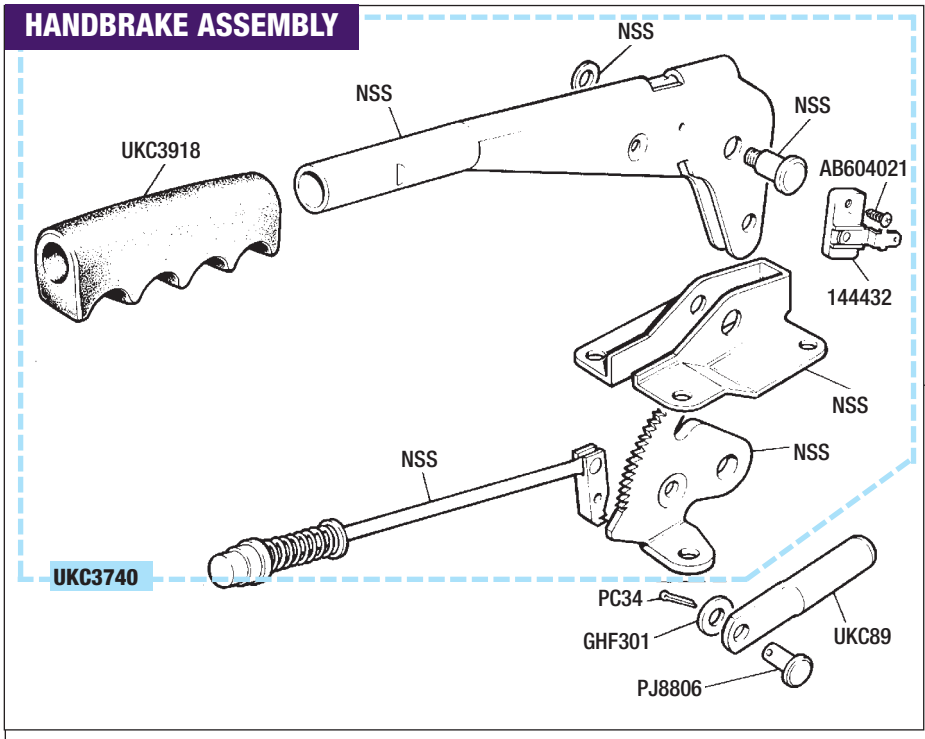

HANDBRAKE GAITER YKC3166PA

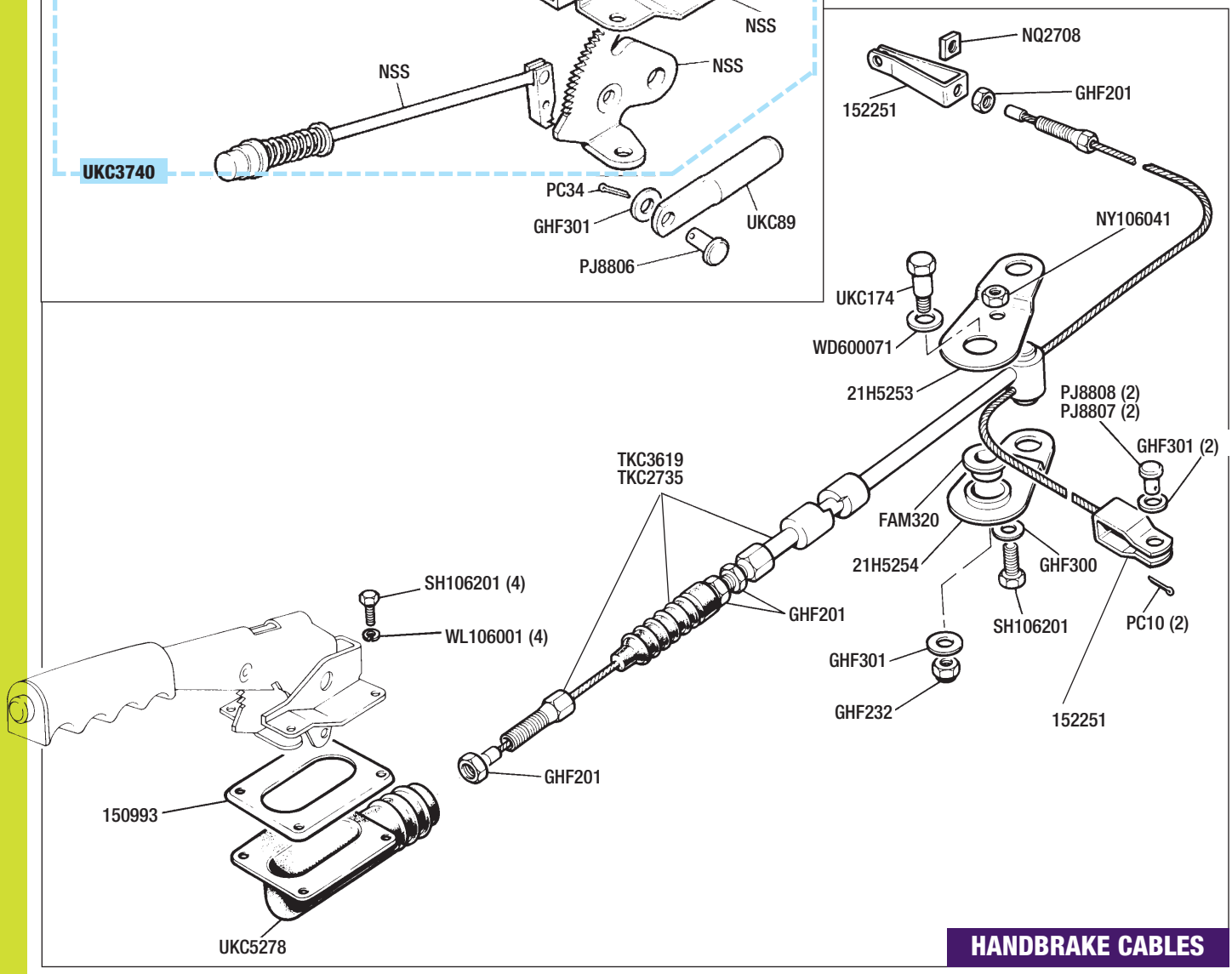

Steering Rack & Fittings

Description	Qty Req.	Part No.
STEERING RACK		
Steering Rack; *Inc gaiters, less track rod ends.*		
RHD Models		
New	(1)	**BAU5274**
Reconditioned	(1)	**BAU5274R**
LHD Models		
New	(1)	**BAU5275**
Reconditioned	(1)	**BAU5275R**
Track Rod End *(Inc nyloc nut)*	(2)	**GSJ185**
Nut-Locking *Track rod end to track rod.*	(2)	**NT114040**
Nut-Nyloc*	(2)	**GHF274**
Washer-Plain* **Locates track rod end to steering arm.*	(2)	**GHF302**
Rack Gaiter	(2)	**RTC2219**
Fasteners-Rack Gaiter;		
Wire Tie *(Inner-large)*	(2)	**512781**
Clip *(Outer-small)*	(2)	**UKC5533**
Track Rod & Inner Ball Joint	(2)	**BAX1467**
Inner Bush	(2)	**EAW798**
Pinion Bearing	(1)	**21H5212**
MOUNTING BOLTS		
Bolt*	(2)	**BH110141**
Washer-Plain*	(2)	**GHF302**
Nut* **Pinion end rack mounting.*	(2)	**GHF233**
Bolt+	(2)	**BH110121**
Washer-Spring+	(2)	**WL110001**
Washer-Plain+ *+Threaded end rack mounting.*	(2)	**GHF302**

Steering Wheels

Description	Qty Req.	Part No.
STANDARD TR7		
Steering Wheel *(Standard UK Spec')* *UK Vehicles to VIN402000. Also fitted to USA spec' vehicles.*	(1)	**RKC2110**
Centre Boss *(Standard UK Spec')* *UK Vehicles to VIN402000.*	(1)	**UKC3016**
Centre Boss *(USA Spec')* *Fitted to USA vehicles with RKC2110.*	(1)	**RKC82**
Screw*	(3)	**SE105201**
Washer-Spring* **Locates Boss RKC82 to wheel, USA Spec only.*	(3)	**WM105001**
Steering Wheel *(Standard UK Spec')* *UK Vehicles from VIN402001.*	(1)	**PKC1551**
Centre Badge ('Triumph') *UK Vehicles from VIN402001.*	(1)	**ULC3153**
STANDARD TR8		
TR8 Steering Wheel *(Original spec')*; *Leather (Moto-Lita) wheel. Fits all models. Complete with Boss & Wheel Centre.*		
1) Black Leather	(1)	**PKC1295Black**
2) Blue Leather	(1)	**PKC1295Blue**
AFTERMARKET TR7 & TR8		
Moto-Lita Steering Wheel & Boss; *3-spoke (drilled & polished), 13" dia, dished.*		
3) Wood-Rimmed	(1)	**RB7698**
4) Leather-Rimmed	(1)	**RB7699**
Mountney Steering Wheel & Boss; *13" dia, semi-dished.*		
5) Wood-Rimmed	(1)	**RL1467**

1) ORIGINAL TR8 SPECIFICATION MOTO-LITA WHEEL PKC1295BLACK

2) ORIGINAL TR8 SPECIFICATION MOTO-LITA WHEEL PKC1295BLUE

3) MOTO-LITA WOOD RIMMED WHEEL RB7698

4) MOTO-LITA LEATHER RIMMED WHEEL RB7699

5) MOUNTNEY WOOD-RIMMED SPORTS WHEEL RL1467

STEERING WHEEL & BOSS

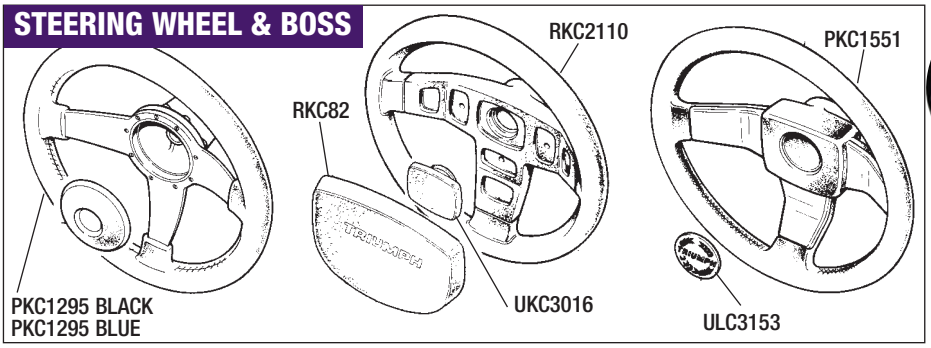

TO ORDER: 01522 568000
www.rimmerbros.co.uk

Steering Column & Fittings

See also; ***ELECTRICAL-Switches & Controls and INTERIOR & TRIM.***

Description	Qty Req.	Part No.
Steering Shaft-Lower	(1)	**TKC1084**
Bolt	(1)	**GHF134**
Washer-Plain	(1)	**GHF301**
Nut-Locking	(1)	**GHF252**
Steering Knuckle *(Upper)*	(1)	**UKC2449**
Bolt	(2)	**GHF134**
Washer-Plain	(2)	**GHF301**
Nut-Locking	(2)	**GHF252**
Steering Column Assembly-Upper;		
RH Entry	(1)	**RKC690**
LH Entry	(1)	**RKC552**
Bush-Upper Column	(2)	**FAM2406**
Bush-Lower Column (Poly) *Locates in bulkhead.*	(1)	**UKC2322P**
Washer-Plain	(1)	**WA600121**
Spring/Thrust Washer	(1)	**UKC5508**
Nut *(Steering wheel to column)*	(1)	**138466**
Washer *(For 138466)*	(1)	**WB600121**
Steering Column Lock;		
Left Hand entry *(Early)*	(1)	**RKC3982**
Right Hand entry	(1)	**RKC3983**
Shear Bolt *Steering column lock.*	(2)	**152597**
Ignition Switch & Harness;		
4-Wire (UK & Euro)	(1)	**218959**
6-Wire (USA)	(1)	**TKC1112**
Key Ring/Fob (TR7)	(1)	**RB7161**
Shear Bolt *(Column mounting)*	(2)	**TKC5780**
Clamp *(Upper column)*	(1)	**UKC2323**
Bolt *(For UKC2323)*	(1)	**GHF134**
Washer-Flat	(2)	**GHF301**
Nut-Locking	(1)	**GHF252**
Clamp-Adjusting *Tube to upper column.*	(1)	**122669**
Locating Plate *(Tapped) Tube to upper column.*	(1)	**125782**
Bolt	(2)	**BH604101**
Washer-Spring	(2)	**GHF331**
Grub Screw	(1)	**125781**
Nut *(Locking)*	(1)	**JN2110**
Steering Column Cover-Upper; *See Interior & Trim for illustration.*		
RHD Models *(to VIN 200001)*	(1)	**XKC591**
RHD/LHD Models *(from VIN 200001)*	(1)	**XKC593**
Steering Column Cover-Lower;		
RHD Models *(to VIN 200001)*	(1)	**XKC592**
RHD/LHD Models *(from VIN 200001)*	(1)	**XKC594**
Bolt *(Cover to cover)*	(2)	**AFU1212**

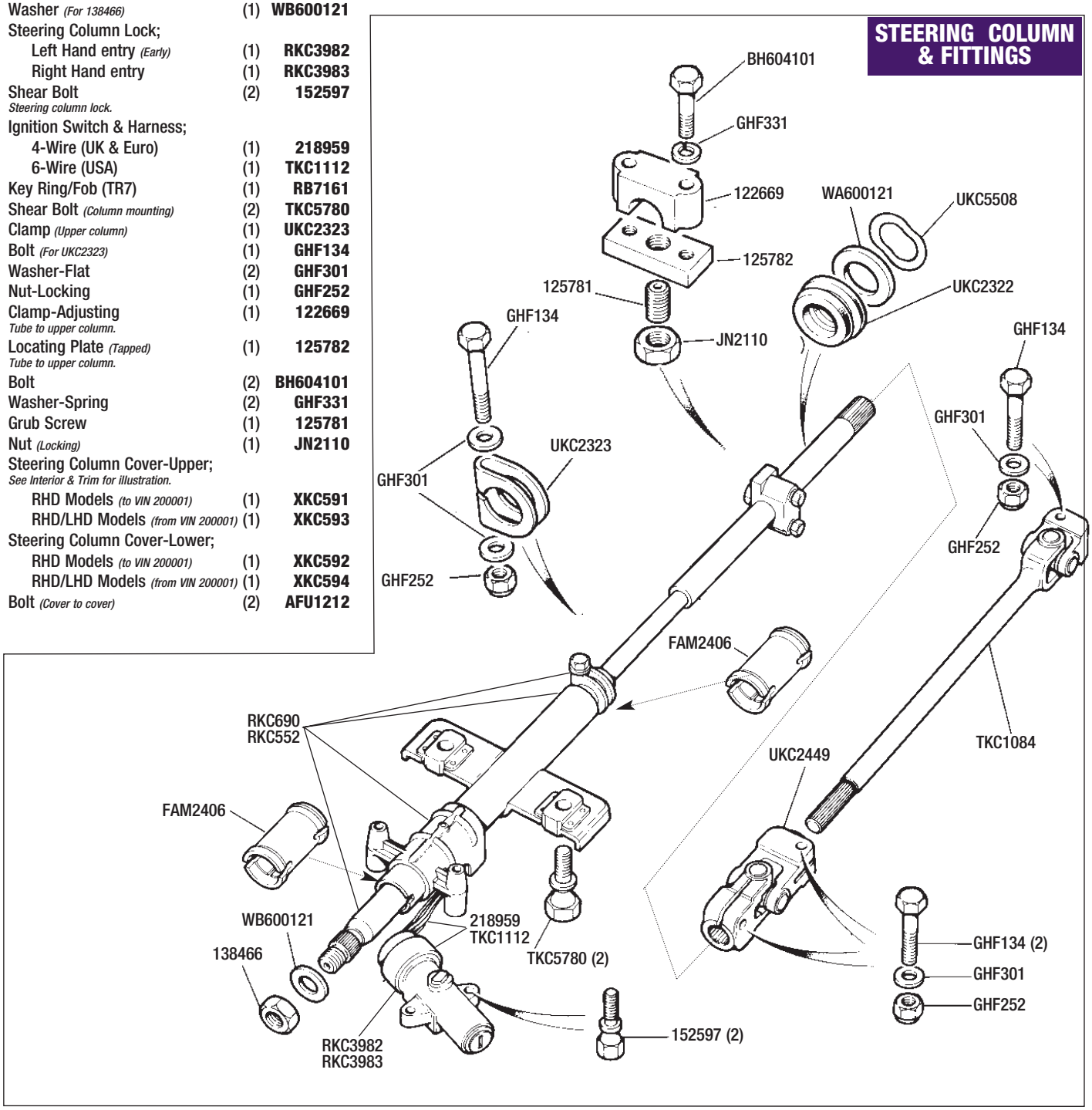

Description	Qty Req.	Part No.	Description	Qty Req.	Part No.	Description	Qty Req.	Part No.

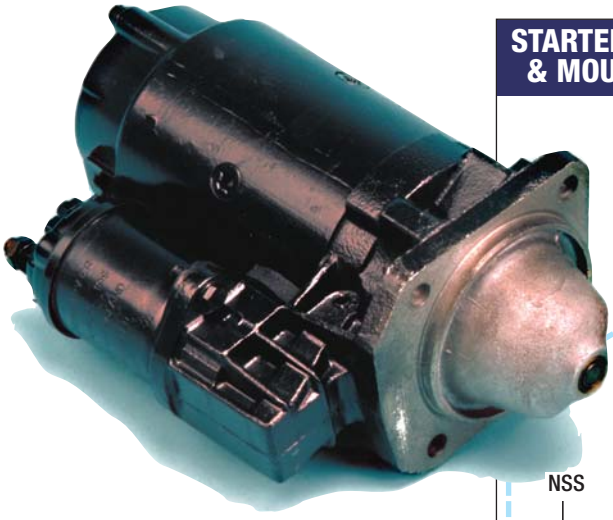

STARTER MOTOR & MOUNTINGS

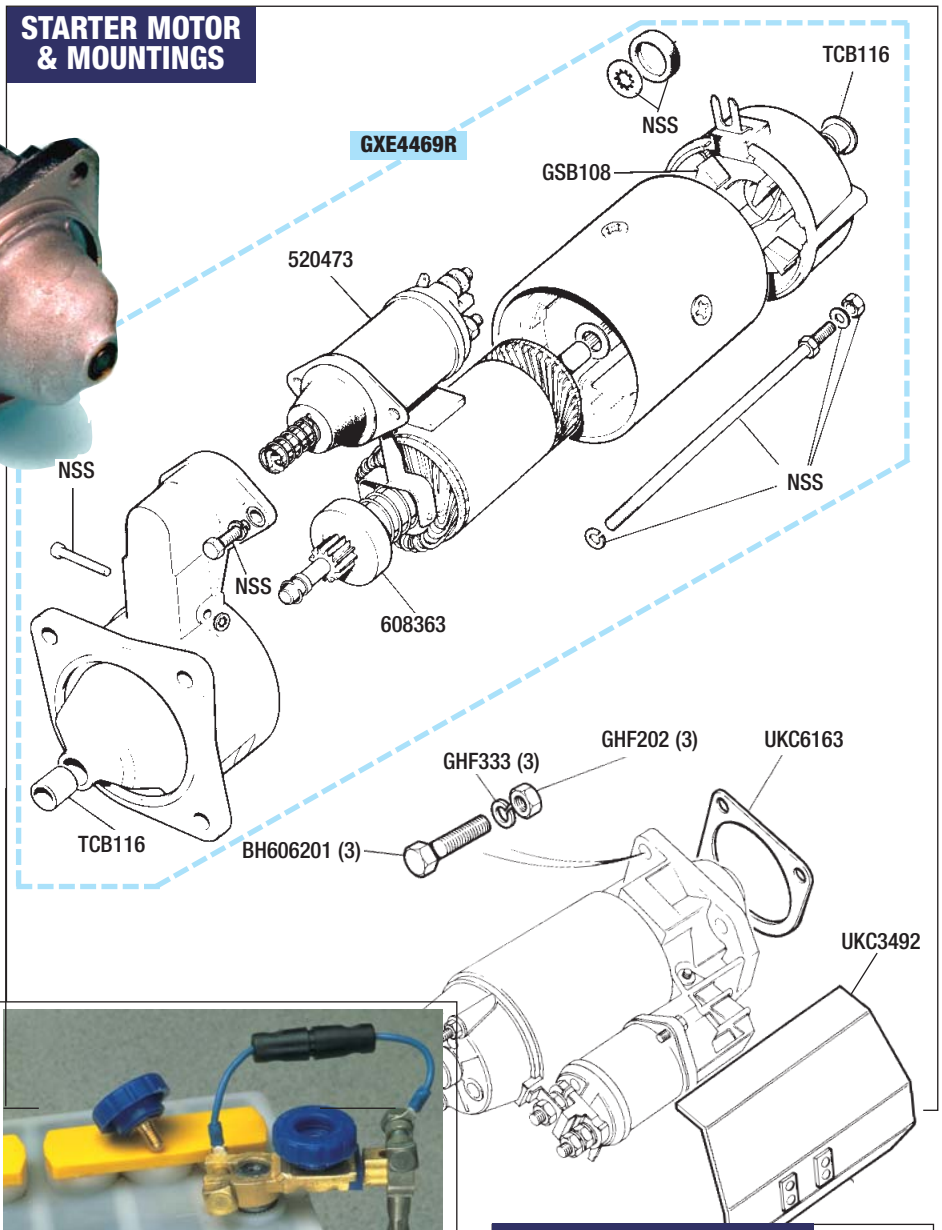

Starter Motor

Starter Motor Assembly;		
Reconditioned unit (Standard)	(1)	**GXE4469R**
New unit (Hi-Torque) *(See panel)*	(1)	**GEU4471UR**
Solenoid	(1)	**520473**
Solenoid (Cap only)	(1)	**520473C**
Starter Relay	(1)	**UKC7219**
Brush Set (Carbon)	(1)	**GSB108**
Starter Pinion/Drive Kit	(1)	**608363**
Starter Bush Kit *Includes front & rear rotor end bushes.*	(1)	**TCB116**
Bolt *(Starter Mounting)*	(3)	**BH606201**
Washer-Spring	(3)	**GHF333**
Nut	(3)	**GHF202**
Shim	(1)	**UKC6163**
Heat Shield	(1)	**UKC3492**

STARTER MOTOR IMMOBILISER

HOW DOES 'DIS-CAR-NECT' WORK?

When leaving your car, simply remove the knob to isolate the starter circuit. The 16 amp by-pass fuse will maintain current to all other electrical circuits (stereo memories, alarm etc). Because the starter motor draws over 150 amp's, any attempt to connect (hot wire) the starter motor will instantly cause the fuse to blow. This immobilises the car until the knob is replaced. If this should happen, simply replace the 16 amp fuse at a convenient time.

As an added advantage, the 'Dic-Car-Nect' will also prevent battery drain if you intend to store your car, simply unscrew the knob and remove the fuse. For extra security, unscrew and remove the immobiliser knob completely.

A SIMPLE WAY TO PREVENT YOUR CAR BEING STOLEN BY HOT WIRING.

'Dis-Car-Nect' Immoboliser	(1)	**RX1356**
Replacement Screw Knob	(1)	**RX1356K**
Replacement Fuse	(1)	**RX1356F**

UPRATED HI-TORQUE STARTER MOTOR

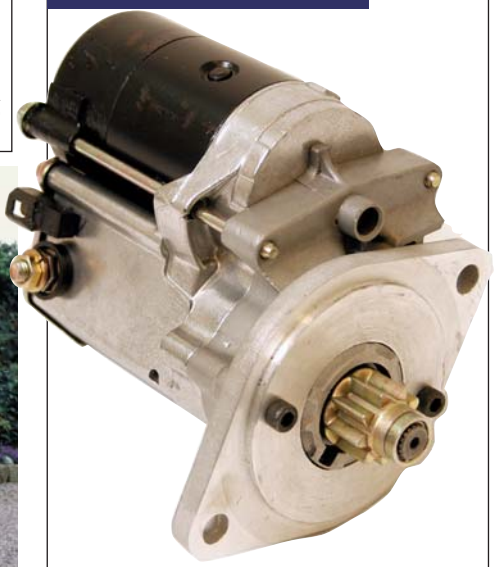

Fits as direct replacement. Starts engines regardless of compression or temperature. Up to 200% more cranking power using uo to 50% less current. No exchange required.

TR7 Uprated Hi-Torque Starter Motor	(1)	**GEU4471UR**

TO ORDER: 01522 568000
www.rimmerbros.co.uk

Description	Qty Req.	Part No.	Description	Qty Req.	Part No.	Description	Qty Req.	Part No.

Alternator

Standard Alternator (17 ACR); *See also; **17 ACR service items.***		
New unit	(1)	**GXE2210**
Uprated Alternator* (20 ACR);		
Factory Recon' unit	(1)	**GXE2247**
Heavy Duty Alternator* (25 ACR);		
Factory Recon' unit	(1)	**GXE2113**
Cooling Fan* **For 20 & 25 ACR alternators only.*	(1)	**605410A**
Fan Belt *(All units)*	(1)	**GCB10900**

SERVICE ITEMS *(17 ACR Alternator only)*

'Surge' Protector	(1)	**AEU3079**
Rectifier	(1)	**AEU4152A**
Brush Set *(Carbon)*	(1)	**GGB504**
Regulator	(1)	**BAU5264**
Cooling Fan *(Alternator)*	(1)	**AAU3956A**
Pulley *(Alternator)*	(1)	**AEU1238**

ALTERNATOR MOUNTINGS *(All units)*

Adjustment Bracket	(1)	**UKC4390**
Setscrew *(Adjusting/locking)*	(1)	**SH108201**
Washer-Flat	(1)	**GHF301**
Bolt-Pivot *(Adjusment bracket)*	(1)	**BH605321**
Washer-Flat	(1)	**GHF301**
Spacer	(1)	**UKC3369**
Nut	(1)	**GHF201**
Mounting Bracket	(1)	**TKC3368**
Bolt *(Alternator pivot)*	(1)	**BH605401A**
Washer-Plain	(2)	**GHF301**
Nut	(1)	**GHF201**
Support Strap	(1)	**UKC4365**
Bolt *(Support strap to bracket)*	(1)	**HB816**
Washer-Flat	(1)	**GHF301**
Nut	(1)	**GHF201**
Bolt *(Support strap)*	(1)	**GHF103**
Washer-Flat	(1)	**GHF301**
Bolt *Mounting bracket to cylinder block.*	(2)	**BH605221**

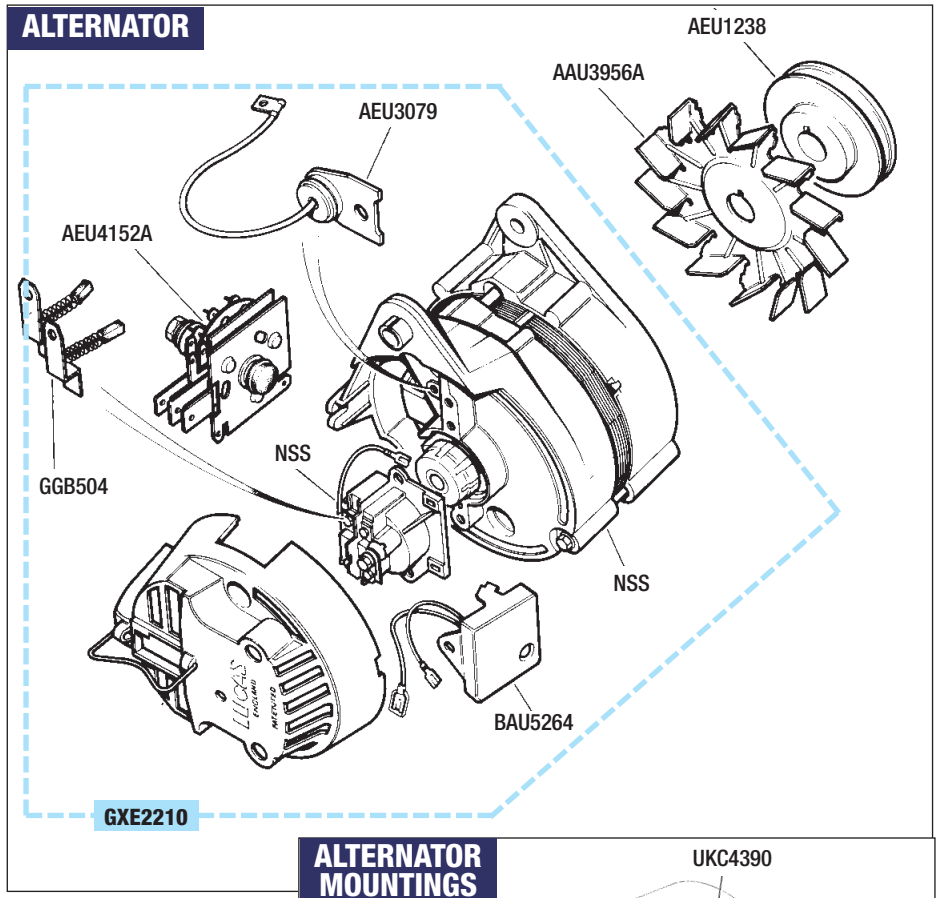

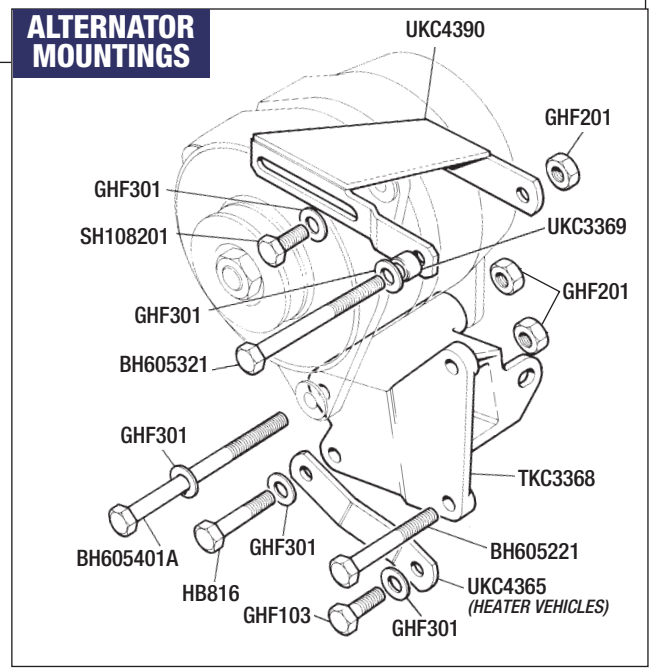

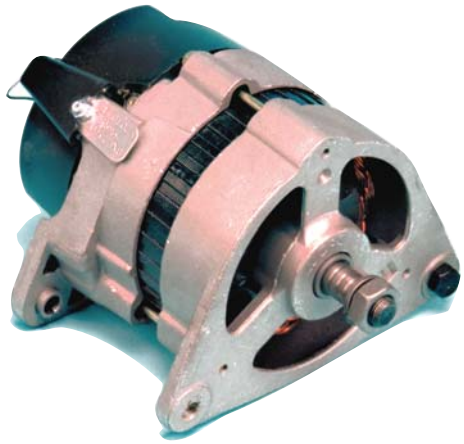

Engine Electrics-Ignition System

Distributor/Plugs/Leads/Coil

Description	Qty Req.	Part No.
DISTRIBUTOR ASSEMBLY		
Distributor Assembly *(AC Delco); UK & European models. Complete, ready to fit*		
Reconditioned unit	(1)	**RKC66R**
We can also supply new distributors for certain USA markets. Please enquire for prices & availability.		
Distributor Cap	(1)	**GDC110**
Rotor Arm	(1)	**GRA111**
Retaining Screw for Rotor Arm	(2)	**PX454**
Washer for above	(2)	**WL104001**
Spring Set *(Advance/retard)*	(1)	**RTC1863**
Condenser	(1)	**GSC104**
Contact Breaker Points	(1)	**GCS106**
Screw *(Contact Breaker Points)*	(1)	**511842**
Driven Gear *(Distributor)*	(1)	**519595**
Dowel Pin	(1)	**517914**
Vacuum Unit	(1)	**516867**
Vacuum Pipe	(1)	**UKC2110**
Rubber Elbow (for pipe)	(2)	**128262**
Bolt *(Distributor to block)*	(2)	**GHF117**
Washer-Spring	(2)	**GHF331**
Washer-Flat	(2)	**WC701121**
'O' Ring Distributor Body	(1)	**517913**
ELECTRONIC IGNITION KITS;		
Both kits offer maintenance free ignition systems (in place of contact points), with improved performance and fuel economy.		
Lumenition Electronic Ign Kit	(1)	**RB7133**
Newtronic Electronic Ign Kit	(1)	**RB7168**
PLUGS/LEADS/COIL		
Spark Plugs;		
Standard	(4)	**GSP4382**
High Performance	(4)	**GSP4382HP**
Spark Plug Spanner	(1)	**GAT140**
Plug Lead Set *(Standard);*		
To VIN 200000 *(41 cm coil lead)* *Coil mounted on bulkhead.*	(1)	**GHT167**
From VIN 200001 *(71 cm coil lead)* *Coil mounted on Rh inner wing.*	(1)	**GHT183**
Plug Lead Set *(High performance);* *Silicone leads.*		
To VIN 200000 *(41 cm coil lead)* *Coil mounted on bulkhead.*	(1)	**GHT167HP**
From VIN 200001 *(71 cm coil lead)* *Coil mounted on Rh inner wing.*	(1)	**GHT183HP**
Clip-Plug Lead (1) *(Holds 4 cables)*	(1)	**148673**
Clip-Plug Lead *(Holds 2 cables)*	(2)	**148672**
Bracket *(For 148672 clips)*	(2)	**UKC4328**
Nut *(For UKC4328)*	(2)	**JN2160**
Ignition Coil;		
Standard	(1)	**GCL132**
High Performance	(1)	**GCL132HP**
Suppressor *(Ignition coil)* *Radio anti-interference.*	(1)	**UKC2211**
Coil Mounting;		
Nut	(2)	**GHF212**
Washer-Spring	(2)	**GHF331**
Washer-Flat	(2)	**WC701121**
Bracket *Not Shown.*	(1)	**TKC5632**

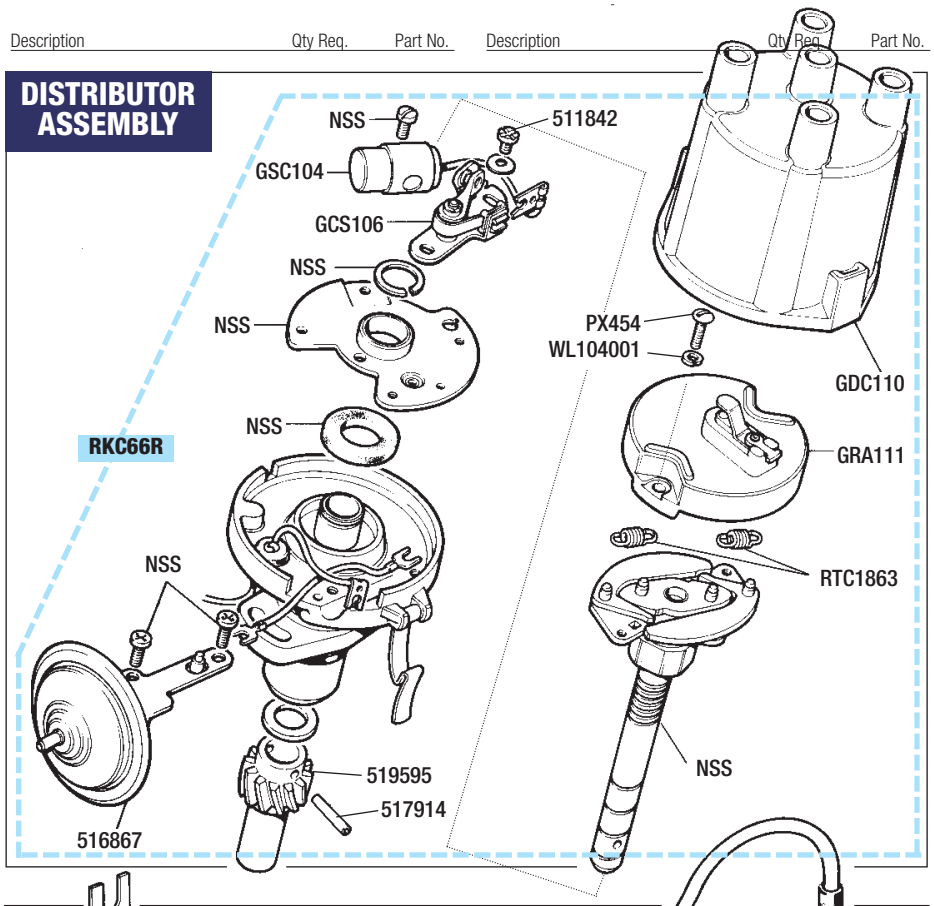

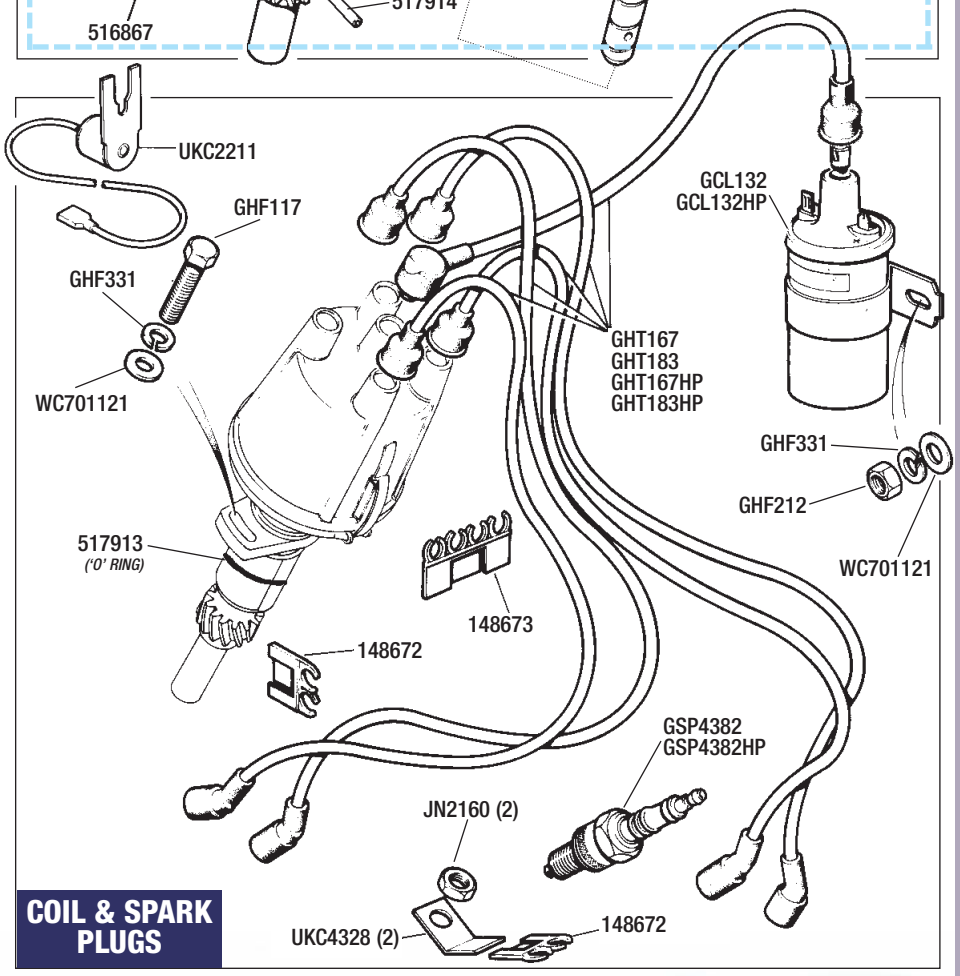

FIT ONE OF OUR ELECTRONIC IGNITION KITS FOR IMPROVED PERFORMANCE. PHOTO ALSO SHOWS HIGH PERFORMANCE PLUGS, LEADS & COIL.

TO ORDER: 01522 568000
www.rimmerbros.co.uk

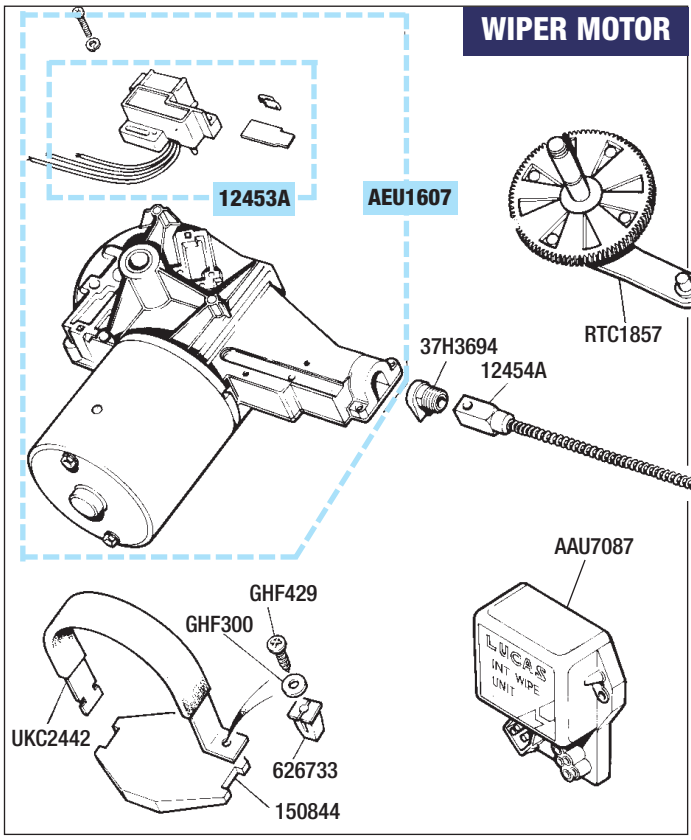

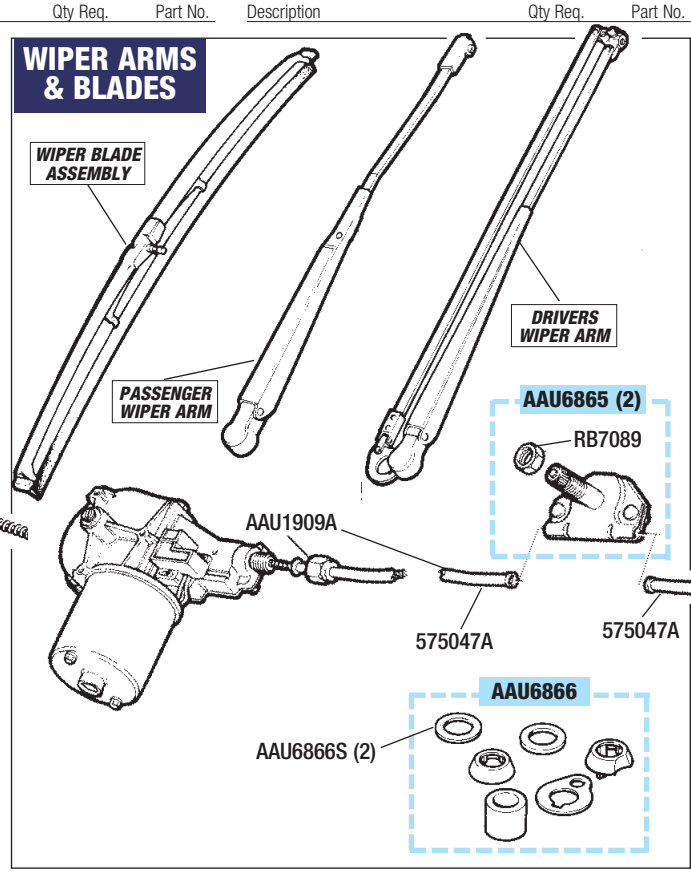

Windscreen Wiper System

Motor/Arms/Blades

WIPER MOTOR

Description	Qty Req.	Part No.
Wiper Motor;		
New *(Less drive gear)*	(1)	**AEU1607**
Reconditioned *(Less drive gear)*	(1)	**AEU1607R**
Parking Switch (Wipers)	(1)	**12453A**
Wiper 'Delay' Relay *Intermittent wipe system.* *See Also;* ***Horns/Relays/Fuses*** *(Relays/Fuses/Fittings - Page 78)*	(1)	**AAU7087**
Drive Gear (Plastic) *Not included in wiper motor assembly.*	(1)	**RTC1857**
Ferrule *(Rack to motor)*	(1)	**37H3694**
Wiper Rack	(1)	**12454A**
Mounting Pad *(Wiper motor)*	(1)	**150844**
Retaining Bracket	(1)	**UKC2442**
Screw-Self Tapping	(1)	**GHF429**
Washer-Flat	(1)	**GHF300**
Locknut *(Special)*	(1)	**626733**

WIPER ARMS & BLADES

Description	Qty Req.	Part No.
Drivers Wiper Arm (Pantograph);		
RHD Vehicles	(1)	**UKC5911**
LHD Vehicles	(1)	**UKC5912**
Passenger Wiper Arm (Single);		
RHD Vehicles	(1)	**UKC5913**
LHD Vehicles	(1)	**UKC5914**
Wiper Blade Assembly *(Rhd & Lhd vehicles)*		
Drivers Side (16")	(1)	**GWB200**
Passenger Side (18")	(1)	**GWB271**
Tube-Wiper Rack;		
Motor to Rh Wheel Box	(1)	**AAU1909A**
Rh to Lh Wheel Box	(1)	**575047A**
Wiper Wheel Box (Rh & Lh) *(Inc nut)*	(2)	**AAU6865**
Nut *(Wiper Wheel Box)*	(2)	**RB7089**
Bush Kit-Wiper Wheel Box *Wiper arm to wheel box.*	(2)	**AAU6866**
Seals only (pair)	(2)	**AAU6866S**

WIPER ARM & BLADE KITS

Kits include pairs of new wiper arms including retaining nuts and wiper blades.

Kits include:- Drivers wiper arm (pantograph), passengers wiper arm, 2 retaining nuts and 2 wiper blades.

Wiper Arm & Blade Kit;
RHD (1) **RB2014RHD**
LHD (1) **RB2014LHD**

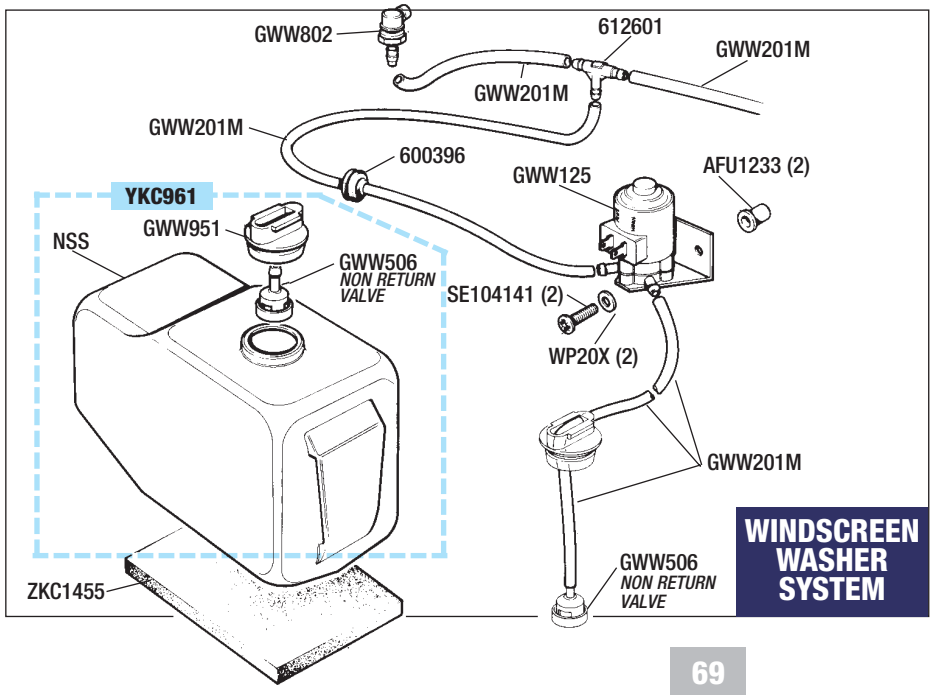

Windscreen Washer System

Pump/Bottle/Tubing/Jets

Description	Qty Req.	Part No.
Washer Pump Assembly	(1)	**GWW125**
Setscrew *(Pump mounting)*	(2)	**SE104141**
Washer-Flat	(2)	**WP20X**
'Wellnut'	(2)	**AFU1233**
Tubing *(Pump to T piece)* *Sold in metre lenghs (4 mm dia).*	(1)	**GWW201M**
Grommet	(1)	**600396**
'T' Piece	(1)	**612601**
Tubing *(T piece to Jets)* *Sold in metre lenghs (3 mm dia).*	(1)	**GWW201M**
Water Jet	(2)	**GWW802**
Tubing *(Bottle to pump)* *Sold in metre lenghs (4 mm dia).*	(1)	**GWW201M**
Washer Bottle	(1)	**YKC961**
Top/Cap *(Washer Bottle)*	(1)	**GWW951**
'Non-Return' Valve	(2)	**GWW506**
Seating Pad	(1)	**ZKC1455**

Headlamps

Light Units/Bulbs/Bowl & Rim

Description	Qty Req.	Part No.
HEADLIGHT UNIT (GLASS) & BULBS		
Light Unit *(Sealed Beam type);*		
RHD (no pilot)	(2)	**GLU132**
RHD (with pilot)	(2)	**GLU104**
LHD *(Except France)*	(2)	**GLU133**
Light Unit *(Replaceable Bulb type);*		
LHD (no pilot)	(2)	**GLU513**
LHD (with pilot)	(2)	**GLU515**
Bulb (For GLU513 & GLU515) *(Non halogen);*		
Clear (45/40w)	(2)	**GLB410**
Clear (60/55w)	(2)	**GLB2983**
Cadmium Yellow	(2)	**GLB411**
HALOGEN HEADLIGHTS		
Halogen Conversion Kit; *Replace your standard light units with our Halogen Conversion Kit, for improved night time driving visibility and safety! Kit inc; 2 light units, bulbs & instructions.*		
RHD (with or without pilot)	(1)	**RB7129**
LHD (with or without pilot)	(1)	**RB7082**
LHD Pilot Type *(France only)*	(1)	**RB7160**
Halogen Service Items;		
Light Unit only (Halogen type)		
RHD (with or without pilot)	(2)	**GLU583**
LHD (with or without pilot)	(2)	**RB7409**
Halogen Bulb (for above)		
Clear (55/60w) each	(2)	**GLB472**
'Xenon' Type (pair)	(1)	**GLB472X**
Clear Uprated (100/80w) each	(2)	**GLB484**
Yellow (55/60w) each	(2)	**GLB476**
HEADLAMP BOWL & ADJUSTMENT		
Headlamp Backing Bowl unit *Inner/outer bowl & outer rim.*	(2)	**S5400**
Headlamp Bowl Inner only	(2)	**S5400/I**
Headlamp Bowl Outer only	(2)	**S5400/O**
Headlamp Adjuster Kit	(2)	**BHM7058**
Outer Retaining Rim	(2)	**515218A**
Screw *(Light unit/rim retaining)*	(6)	**PZJ602**
Cable & Connector		
Sealed Beam (no pilot)	(2)	**BAU2110**
Sealed Beam (with pilot)	(2)	**BAU2111**
Bulb Type (with pilot)	(2)	**27H5976**

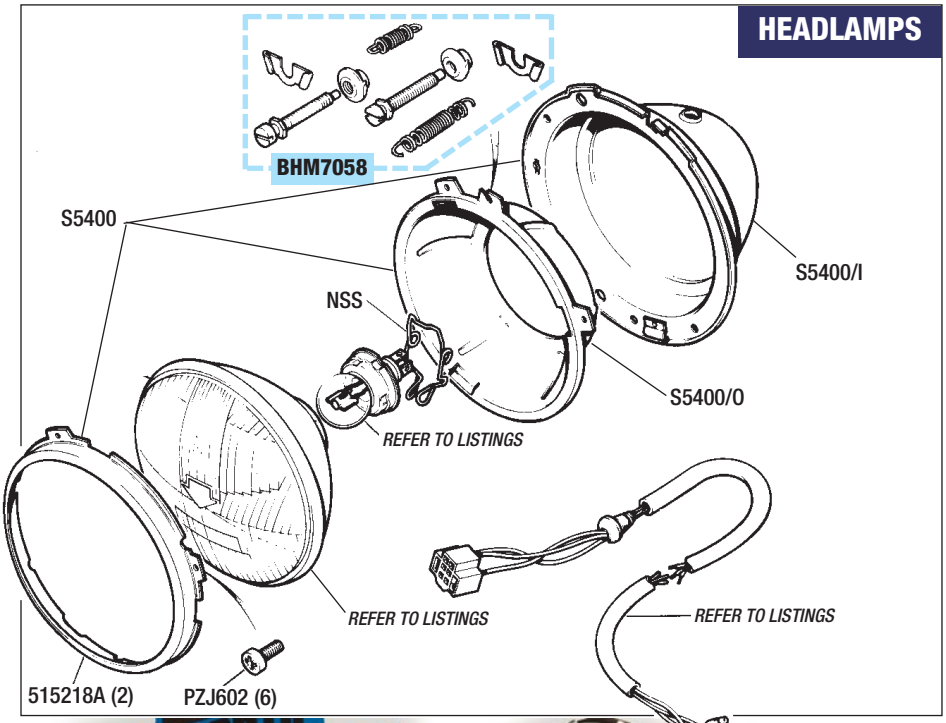

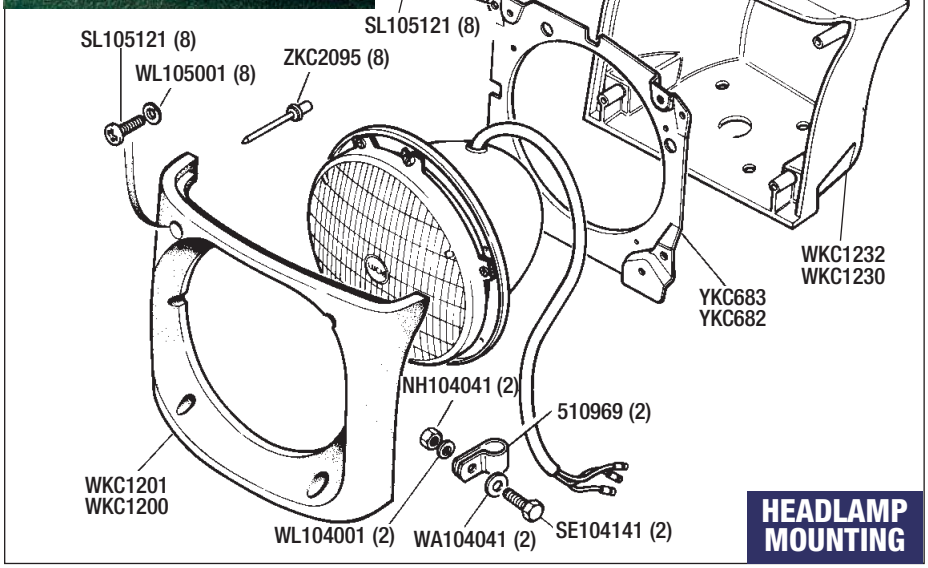

Headlamp Mounting

Description	Qty Req.	Part No.
Headlamp Surround *(Rubber)*		
Rh	(1)	**WKC1201**
Lh	(1)	**WKC1200**
Screw *Rubber surround to mounting panel.*	(8)	**SL105121**
Washer *(For SL105121)*	(8)	**WL105001**
Mounting Plate		
Rh	(1)	**YKC683**
Lh	(1)	**YKC682**
'Pop' Rivet *Headlamp to backing plate.*	(8)	**ZKC2095**
Screw *(Mounting plate to pod)*	(8)	**SL105121**
Headlamp Pod		
Rh	(1)	**WKC1232**
Lh	(1)	**WKC1230**
Information Label- Headlamp Lift Instructions *"Manual operation."*	(1)	**RB7186**
Information Label Kit *Car set includes; Tyre pressures, Engine Data, E11, Air Box, Headlamps, Unipart, Brake Data, & Hood instructions. The labels are also available separately.*	(1)	**RB7091**
Clip-Cable Retaining	(2)	**510969**
Screw	(2)	**SE104141**
Washer-Flat	(2)	**WA104041**
Washer-Spring	(2)	**WL104001**
Nut	(2)	**NH104041**

TO ORDER: 01522 568000
www.rimmerbros.co.uk

Headlamp Lift System

Description	Qty Req.	Part No.
Headlamp Lift Motor;		
Round Electric Plug type* *(Recon)*	(1)	**RKC822R**
Vehicles to approx 1978/ACG25000.		
**See note; 'Round Electrical Plugs Fitted'.*		
Square Electric Plug type *(New)*	(1)	**PKC1287**
Square Electric Plug type *(Recon)*	(1)	**PKC1287R**
Vehicles from approx 1978/ACG25001.		

***Round Electrical Plugs Fitted ?** The availability of reconditioned 'Round Plug' headlamp motors is sometimes limited. If we do not have stock when you enquire, we can supply a 'Square Plug' motor together with a conversion kit to adapt your existing wiring - part number RKC822RKit. Alternatively we can supply a conversion kit separately (part number RB7088), listed next in this section.*

Description	Qty Req.	Part No.
Headlamp Motor Plug		
Conversion Kit	(2)	**RB7088**
Converts round to square electrical plug.		
Headlamp Motor Lift Arm	(2)	**PKC1287AR**
Connects to link rod.		
Headlamp Motor Relay	(2)	**DRC1820**
Headlamp lift system.		
Circuit Breaker *(Headlamp lift)*	(1)	**151244**
Relay-Day Headlamp Flash *(Pektron)*	(1)	**UKC7341**
Relay-Headlamp Flash	(1)	**DRC1820**
Information Label-		
Headlamp Lift Instructions	(1)	**RB7186**
Manual operation.		
Information Label Kit	(1)	**RB7091**
***Car set includes;** Tyre pressures, Engine Data, E11, Air Box, Headlamps, Unipart, Brake Data, & Hood instructions. The labels are also available separately.*		
Bracket & Hinge Assembly	(2)	**RTC1411**
Unbelievably Low Price!		
Clamping Plate	(4)	**ZKC2244**
Nut	(8)	**GHF212**
Washer-Spring	(8)	**GHF382**
'Bump-Stop'	(2)	**ZKC1161**
Nut	(2)	**NH105041**
Washer	(2)	**WA105001**
Nut *(Hinge top)*	(8)	**GHF212**
Washer-Spring	(8)	**WL106001**
Washer-Flat	(8)	**GHF314**
Link Assembly *(Adjustable)*	(2)	**RTC1992**
Screw-Special	(2)	**ZKC1281**
Washer-Flat	(2)	**GHF301**
Washer-Spring	(2)	**GHF382**
Nut	(2)	**GHF213**
Bush *(Lower link eye)*	(2)	**ZKC1143**
Washer-Flat	(2)	**WB110061**
Circlip *(Friction fit)*	(2)	**NKC512**
Spring-Hinge Return	(2)	**YKC1347**
Screw-Special (Top)	(2)	**ZKC1277**
Washer-Flat	(2)	**GHF300**
Washer-Flat	(2)	**GHF301**
Washer-Spring	(2)	**WL106001**
Nut	(2)	**GHF212**
Screw-Special (Lower)	(2)	**ZKC1406**
Washer-Flat	(2)	**GHF300**
Washer-Flat	(2)	**GHF301**
Washer-Spring	(2)	**WL106001**
Nut	(2)	**GHF212**

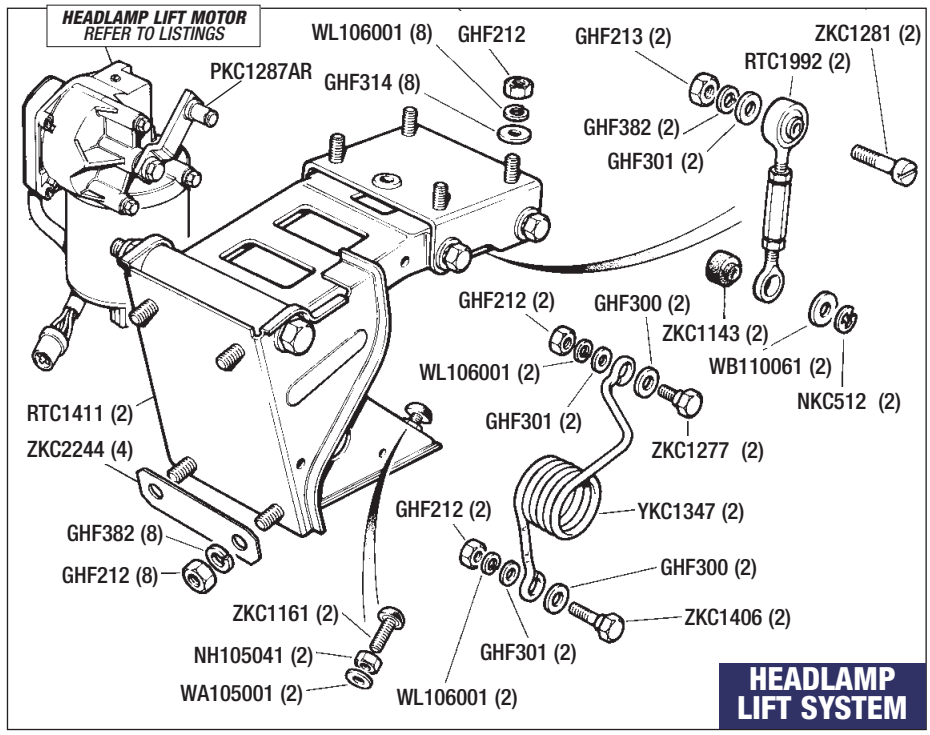

Front Side/Flasher Lamps (UK & European)

***All markets except USA** (Clear lens with amber filter)*

Description	Qty Req.	Part No.
Front Sidelamp Assembly *(Complete, ready to fit);*		
Rh	(1)	**TKC3739**
Lh	(1)	**TKC3740**
Lens only;		
Right Hand		
Clear & Amber Lenses	(1)	**RTC1794K**
Clear Lens only	(1)	**RTC1794Clear**
Amber Filter only	(1)	**RTC1794Amber**
Left Hand		
Clear & Amber Lenses	(1)	**RTC1795K**
Clear Lens only	(1)	**RTC1795Clear**
Amber Filter only	(1)	**RTC1795Amber**
Gasket *(Lens to lamp body)*	(2)	**24G6353**
Screw *(Lens retaining)*	(2)	**RB7131**
Gasket *(Lamp body to bumper)*	(2)	**UKC5192**
Bulb-Side Light	(2)	**GLB989**
Bulb-Indicator	(2)	**GLB382**
Nut *(Lamp retaining)*	(4)	**NH105041**
Washer-Spring	(4)	**WL105001**
Washer-Flat	(4)	**WA105001**

Front Side/Flasher Lamps (USA)

***USA markets only** (All amber lens)*
Not illustrated - see photo.

Description	Qty Req.	Part No.
Front Sidelamp Assembly *(Complete, ready to fit);*		
Rh	(1)	**TKC229**
Lh	(1)	**TKC230**
Lens only - Amber		
Rh	(1)	**RTC1381**
Lh	(1)	**RTC1382**

For all other components, gaskets/bulbs etc, refer to UK specification lamp.

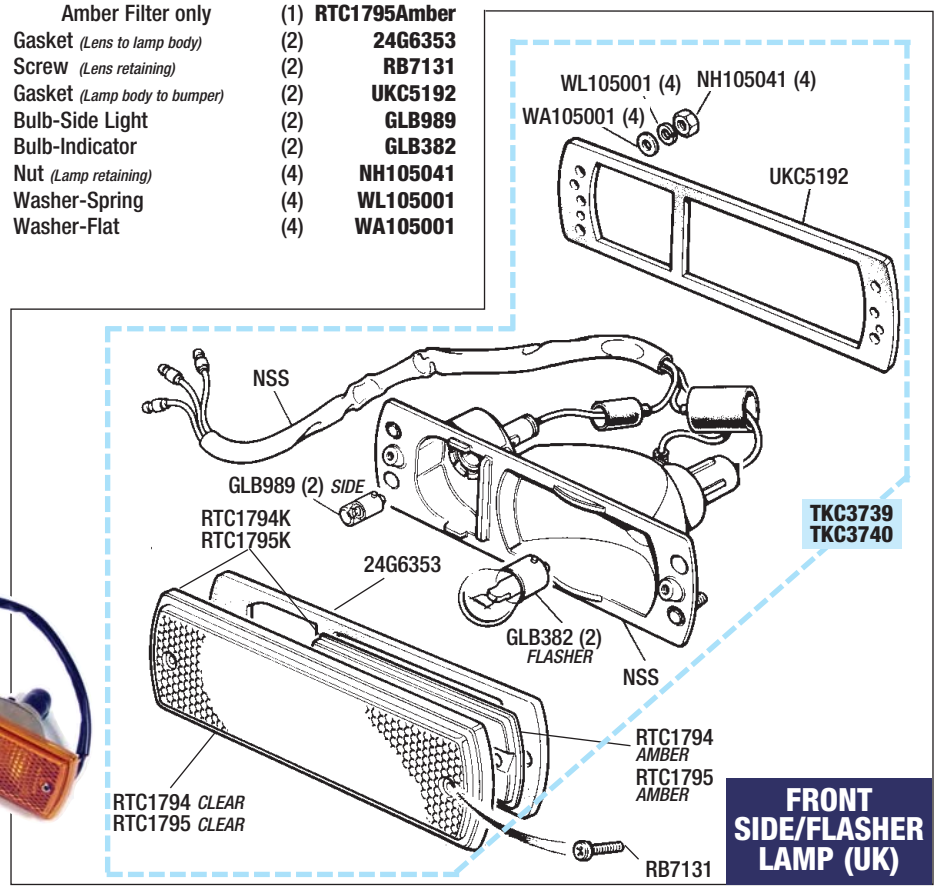

USA SPEC LAMPS & LENSES

Rear Lamps & Fittings

Stop/Tail/Flasher/Reverse

Description	Qty Req.	Part No.
Rear Lamp Assembly;		
Rh	(1)	**TKC232**
Lh	(1)	**TKC231**
Rear Lamp Lens;		
Rh	(1)	**RTC1445**
Lh	(1)	**RTC1446**
Gasket *(Lens to lamp body)*	(2)	**RB7107**
Bulbs;		
Stop	(2)	**GLB382**
Tail Light	(2)	**GLB207**
Flasher	(2)	**GLB382**
Reverse	(2)	**GLB382**
Bulb Holder	(6)	**24G6793**
Gasket *(Lamp body to car)*	(2)	**UKC493**
Nut* *(Lamp to body)*	(12)	**NH105041**
Washer-Star*	(12)	**WE702101**
**Located in boot compartment.*		
High Level Brake Stop Light	(2)	**RX1298**
Fits inside rear window (universal type).		

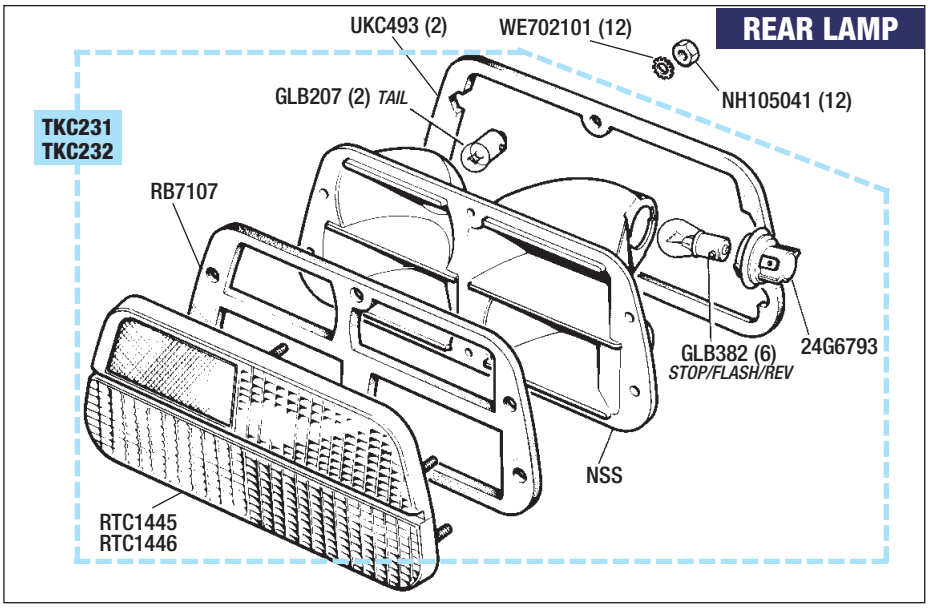

CRUISE LIGHT & INDICATOR REPEAT LAMP

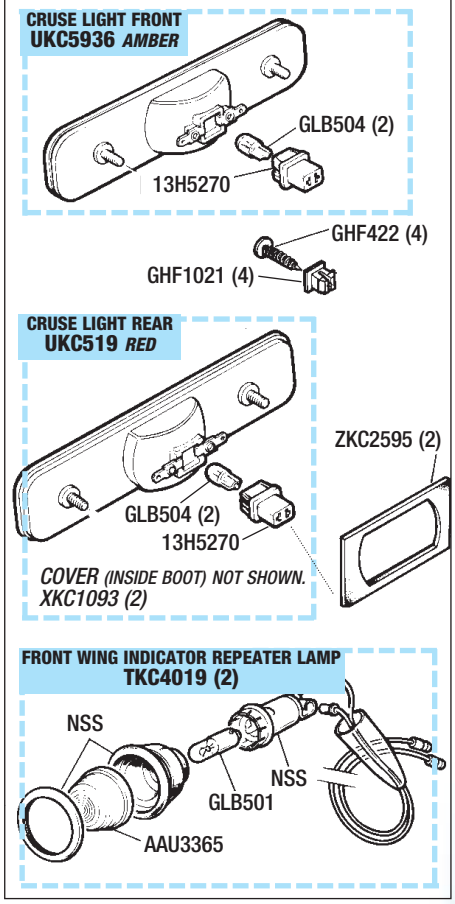

Cruise Light (Side Marker) & Indicator Repeater Lamp

CRUISE LIGHTS

These are a very popular accessory for UK & European vehicles. They replace the black plastic blanking plates which are located on the front wing (above the corner bumpers), and the rear wing. They offer improved night time safety, particularly when manouvering, and can be wired (wiring not supplied) into the sidelights (front & rear) or indicators (front only), or used purely as reflectors.

Description	Qty Req.	Part No.
Cruise Light Kit *(USA style)*	(1)	**RB7143**
See photo.		
Includes 2 amber (front), 2 red (rear) lights, bulbholders, bulbs, 2 gaskets (rear lamp only), screws & clips.		
Cruise Light only;		
Inc bulb & bulb holder.		
Amber (Front)	(2)	**UKC5936**
Red (Rear)	(2)	**UKC519**
Bulb	(4)	**GLB504**
Bulb Holder	(4)	**13H5270**
Screw-Lamp Retaining	(8)	**GHF422**
Clip	(8)	**GHF1021**
Gasket *(Lamp to body)*	(2)	**ZKC2595**
Rear cruise lamp only.		
Rear Cruise Lamp Cover	(2)	**XKC1093**
Inside boot.		

INDICATOR REPEATER LAMP

Optional UK specification. Button lamp, fits on side of front wing.

Description	Qty Req.	Part No.
Repeater Lamp Assembly	(2)	**TKC4019**
Lens (Amber)	(2)	**AAU3365**
Bulb	(2)	**GLB501**

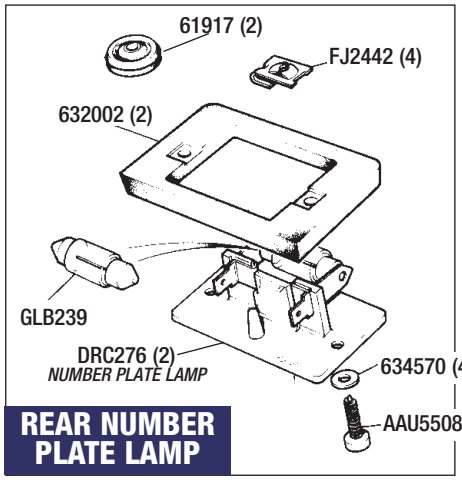

Rear Number Plate Lamp

Description	Qty Req.	Part No.
Number Plate Lamp Kit	(1)	**RS2019**
Includes: 2 lamps, bulbs, gaskets and screws.		
Number Plate Lamp *(Inc bulb)*	(2)	**DRC276**
Bulb only	(2)	**GLB239**
Gasket-Rubber	(2)	**632002**
Grommet-Cable	(2)	**61917**
Screw (Lamp Retaining)	(4)	**AAU5508**
Washer/Seal	(4)	**634570**
'Spire Nut'	(4)	**FJ2442**

COMPLETE LAMPS, LENSES & FITTINGS ALWAYS IN STOCK.

TO ORDER: 01522 568000
www.rimmerbros.co.uk

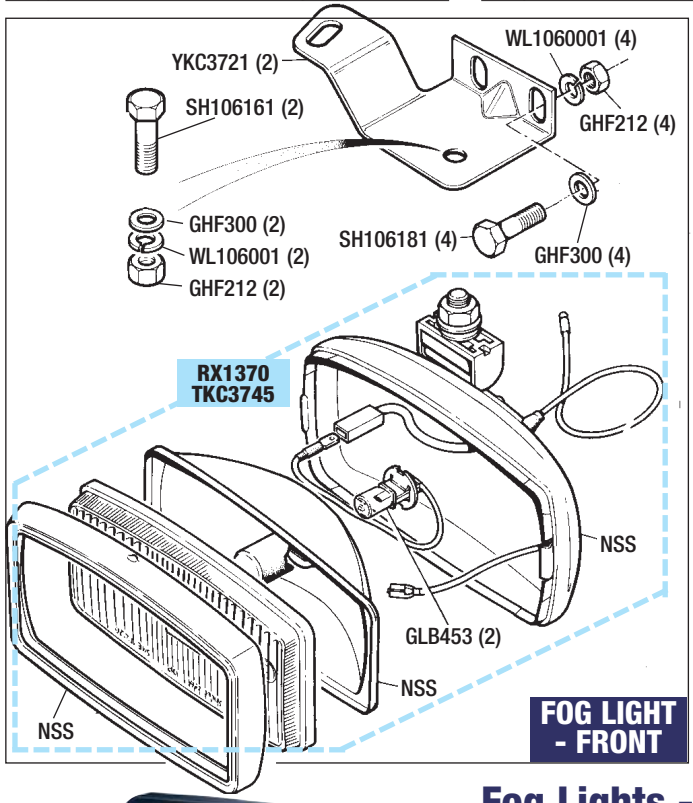

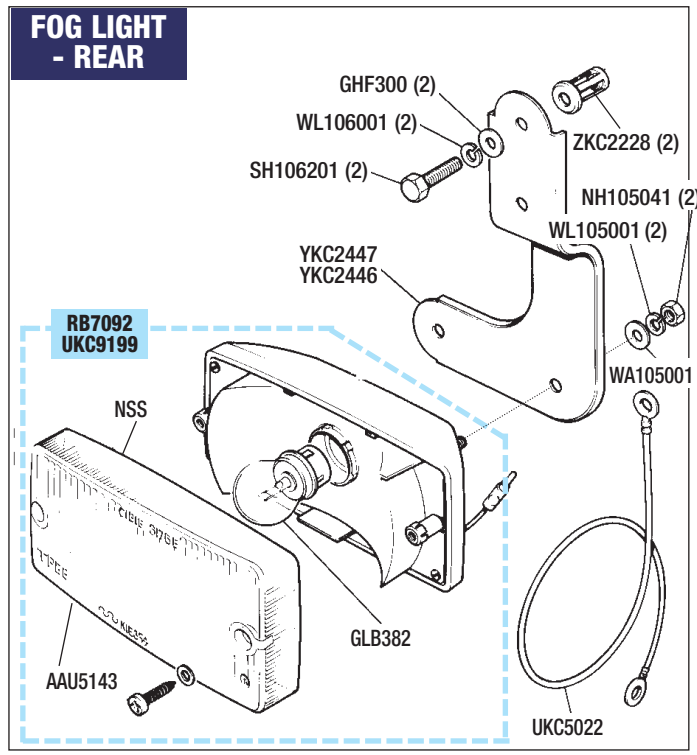

FOG LAMPS - RX1370

Fog Lights - Front

LIGHT UNIT

Front Fog Light;		
Replacement type (pair)	(1)	**RX1370**
Original type *(Halogen)*	(2)	**TKC3745**
Bulb *(Halogen)*	(2)	**GLB453**
Suitable for all original lights		

MOUNTING BRACKET & FITTINGS

Fitting Kit-Front Fog Light	(1)	**RB7343**
Mounting Bracket	(2)	**YKC3721**
All models, Rh & Lh.		
Bolt-Bracket to Body	(2)	**SH106181**
Washer-Flat	(4)	**GHF300**
Washer-Spring	(4)	**WL106001**
Nut	(4)	**GHF212**
Bolt-Lower Mounting	(2)	**SH106161**
Washer-Flat	(2)	**GHF300**
Washer-Spring	(2)	**WL106001**
Nut	(2)	**GHF212**

REAR FOG LAMPS - RB7092

Fog Lights - Rear

LIGHT UNIT

Rear Fog Light;		
Wipac Replacement	(2)	**RB7092**
Original type *(Cibie)*	(2)	**UKC9199**
Lens*	(2)	**AAU5143**
Bulb*	(2)	**GLB382**
Fits all original specification lights.		
Earth Lead	(2)	**UKC5022**
High Level Brake Stop Light	(2)	**RX1298**
Fits inside rear window, universal type.		

MOUNTING BRACKET & FITTINGS

Fitting Kit-Rear Fog Light		
Kits include items marked +.		
Rh	(1)	**RB7381**
Lh	(1)	**RB7382**
Mounting Bracket+		
Rh	(1)	**YKC2447**
Lh	(1)	**YKC2446**
Setscrew + *(Bracket to body)*	(2)	**SH106201**
Washer-Spring+	(2)	**WL106001**
Washer-Flat+	(2)	**GHF300**
'Captive Nut' (Special)+	(2)	**ZKC2228**
Nut + *(Lamp mounting)*	(2)	**NH105041**
Washer-Spring+	(2)	**WL105001**
Washer-Flat+	(2)	**WA105001**

Interior Lighting & Boot Lamp

COCKPIT INTERIOR LIGHTING

Map Reading Light	(1)	**UKC8336**
To vehicle No ACG25001.		
Bulb *(For UKC8336)*	(1)	**GLB239**
Interior Light Assembly *(Roof)*	(1)	**13H9732**
To vehicle No ACG25001.		
Lens only *(Roof light)*	(1)	**BAU1444A**
Bulb *(For roof light)*	(1)	**GLB272**
Screw *(Self tapping)*	(2)	**512156**
Door Lamp *(Original specification);*		
From ACG25001 to VIN 200001	(2)	**TKC3851**
Black rim/escutcheon.		
From VIN 200002 & Future	(2)	**TKC5051**
Chrome rim/escutcheon.		
Door Lamp (Alternative)	(2)	**RB7098**
Alternative type if original unavailable.		
Bulb-Door Lamp *(All types)*	(2)	**GLB239**
Switch-Door Courtesy Lamp	(2)	**YKC931**
Located on A post.		
Screw *(Door Switch)*	(2)	**GHF421**

BOOT COURTESY LIGHT

Lamp unit	(1)	**151353**
Bulb	(1)	**GLB256**
Screw	(2)	**510273**
Switch-Boot Courtesy Light	(1)	**AAU1876A**
Screw *(Boot courtesy switch)*	(2)	**GHF421**

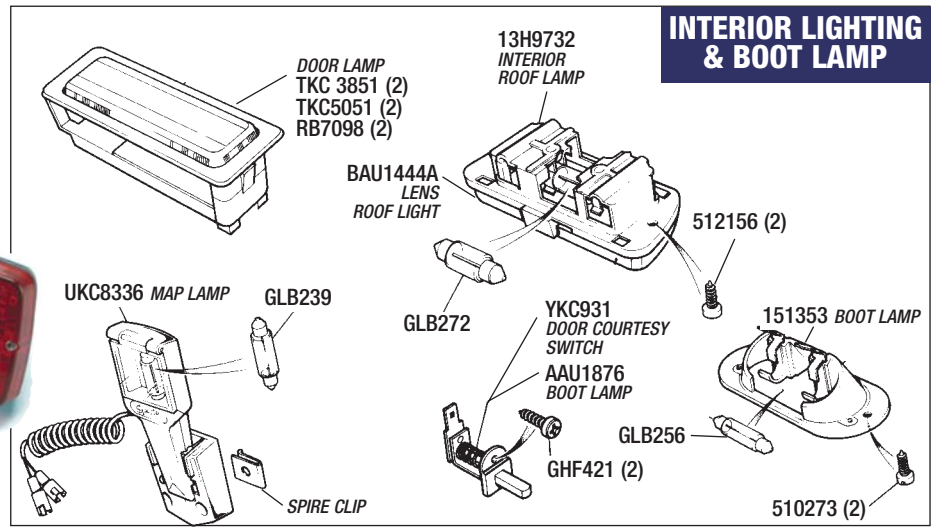

Description	Qty Req.	Part No.

Switches & Controls

Column Mounted

Ignition Switch & Harness		
4-Wire (UK & Euro)	(1)	**218959**
6-Wire (USA)	(1)	**TKC1112**
Steering Column Lock;		
Left Hand entry *(Early)*	(1)	**RKC3982**
Right Hand entry	(1)	**RKC3983**
Shear Bolt *Steering column lock.*	(2)	**152597**
Key Ring/Fob (TR7)	(1)	**RB7161**
Indicator/Horn & Main Beam Stalk;		
Right Hand fitting *(to 1979)*	(1)	**RTC1791**
Left Hand fitting *(from 1979)*	(1)	**AEU1473**
Relay *(Indicator/Flasher)*	(1)	**GFU2125**
Windscreen Wiper & Washer Stalk;		
Left Hand fitting *(to 1979)*	(1)	**AEU1278**
Right Hand fitting *(from 1979)*	(1)	**AEU1651**
Screw *(Column stalk retaining)*	(2)	**RB7319**

Switches & Controls

Dash Mounted

FACIA PANEL & MOUNTING

3, 4 & 5 switch facia.
See; Switches-Dash Mounted (following) for all dash switch details.

Mounting Plate	(1)	**ZKC112**
Facia Panel;		
3 Switch Facia-Black	(1)	**YKC423PA**
3 Switch Facia-Grey	(1)	**YKC423LG**
4/5 Switch Facia-Black*	(1)	**YKC424PA**
4/5 Switch Facia-Grey*	(1)	**YKC424LG**
**4 Hole type supplied-Punch out blank for 5 switch fitting.*		
Illumination Strip (RHD); *'Switch identification'.*		
for 3 Switch Facia		*Use XKC3036*
for 4/5 Switch Facia	(1)	**XKC3870**
for 5 Switch Facia	(1)	**XKC3036**
Bulb *(Illumination strip)*	(2)	**GLB286**
Bulb Holder	(2)	**13H8690**
Lamp Holder	(2)	**160021**
Screw *(Facia panel mounting)*	(2)	**AD608054**
Clip/Nut Fastener *(For AD608054)*	(2)	**ZKC471**

SWITCHES (DASH MOUNTED)

Master Light Switch *Slight modification required to terminals when fitting to early cars.*	(1)	**TKC5089**
Heated Rear Window Switch; *Fixed Head Coupe only.*		
Push-in type* **Early vehicles to ACG25000.*	(1)	**UKC500**
Up-Down type-		
From ACG25001 to VIN 200001	(1)	**TKC3965**
From VIN 200001 to VIN 402001	(1)	**TKC5054**
From VIN 402001 & Future	(1)	**TKC5087**
Front Fog Light Switch *(Up-Down type)* *Vehicles to ACG25000.*	(1)	**UKC499**
Rear Fog Light Switch *(Push-In type)* *Vehicles to ACG25000.*	(1)	**UKC501**
Combined Fog Light Switch- Front & Rear; *2 position*		
From ACG25001 to VIN 200001	(1)	**TKC3964**
From VIN 200001 to VIN 402001	(1)	**TKC5053**
From VIN 402001 & Future	(1)	**TKC6254**
Hazard Warning Switch *Slight modification required to terminals when fitting to early cars.*	(1)	**TKC5088**
Heater/Air Vent Knobs;		
Vent *(Fresh air)*	(1)	**ZKC1222**
Heat Control	(1)	**ZKC1220**
Fan Speed Control	(1)	**ZKC4011**
Direction Control *(Screen/car)*	(1)	**ZKC1219**
Cigar Lighter Assembly	(1)	**ZKC1152**
Knob/Element only *('Pop-out' unit)*	(1)	**AAU5944**
Bulb *(For cigar lighter)*	(1)	**GLB643**
Rheostat (Dimmer) Switch; *Instrument light dimmer.*		
To ACL494	(1)	**37H7994**
From ACL495	(1)	**TKC3936**
Knob-Rheostat Switch	(1)	**ZKC551**
Air Conditioning Switch (On/off)	(1)	**2H4841**
Knob *(For 2H4841)*	(1)	**715390**

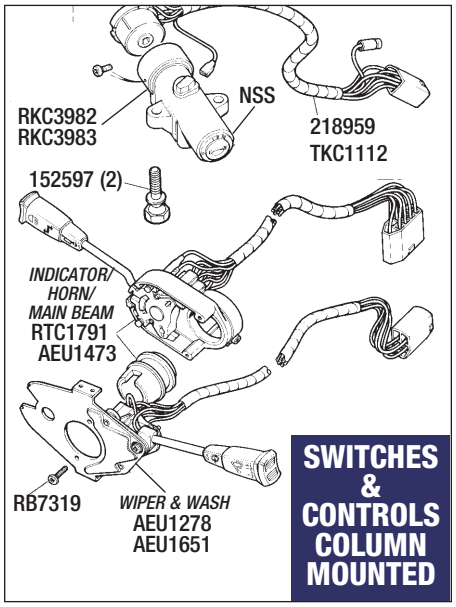

Description	Qty Req.	Part No.

Switches & Controls

Miscellaneous - Not Illustrated.

*See also; **Column Mounted Switches, Dash Mounted Switches, and, Horns/Relays/Fuses.***

'Oil Pressure' Warning Switch	(1)	**GPS117**
'Low Coolant' Level Switch	(1)	**RKC5259**
Temperature Transmitter	(1)	**GTR108**
Choke 'Warning Light' Switch;		
For 'Non-Twist' type Cable *Single connector.*	(1)	**137607**
For 'Pull/Twist' type Cable *Double connector.*	(1)	**FAM8881**
'Stop Light' Switch *(Brake Pedal)*	(1)	**134529**
Brake 'Pressure Failure' Switch	(1)	**AAU2454**
'Hand Brake On' Warning Switch	(1)	**144432**
Reverse Light Switch *(4 Speed);*		
To Gearbox No CG53386	(1)	**GAE191**
From Gearbox No CG53387	(1)	**UKC9224**
Reverse Light Switch *(5 Speed);*		
To Gearbox No 14ACL 17975B	(1)	**TKC6761**
From Gearbox No 14ACL 17976B	(1)	**TKC6802**
Reverse Light Switch *(Automatic);*		
Inhibitor/Reverse Switch	(1)	**RTC36**
Door Courtesy Lamp Switch *Located on A post.*	(2)	**YKC931**
Boot Courtesy Light Switch	(1)	**AAU1876A**
'Fasten Seat Belt' Switch *Compression pad in seat-Optional fitting.*	(1)	**UKC6338**

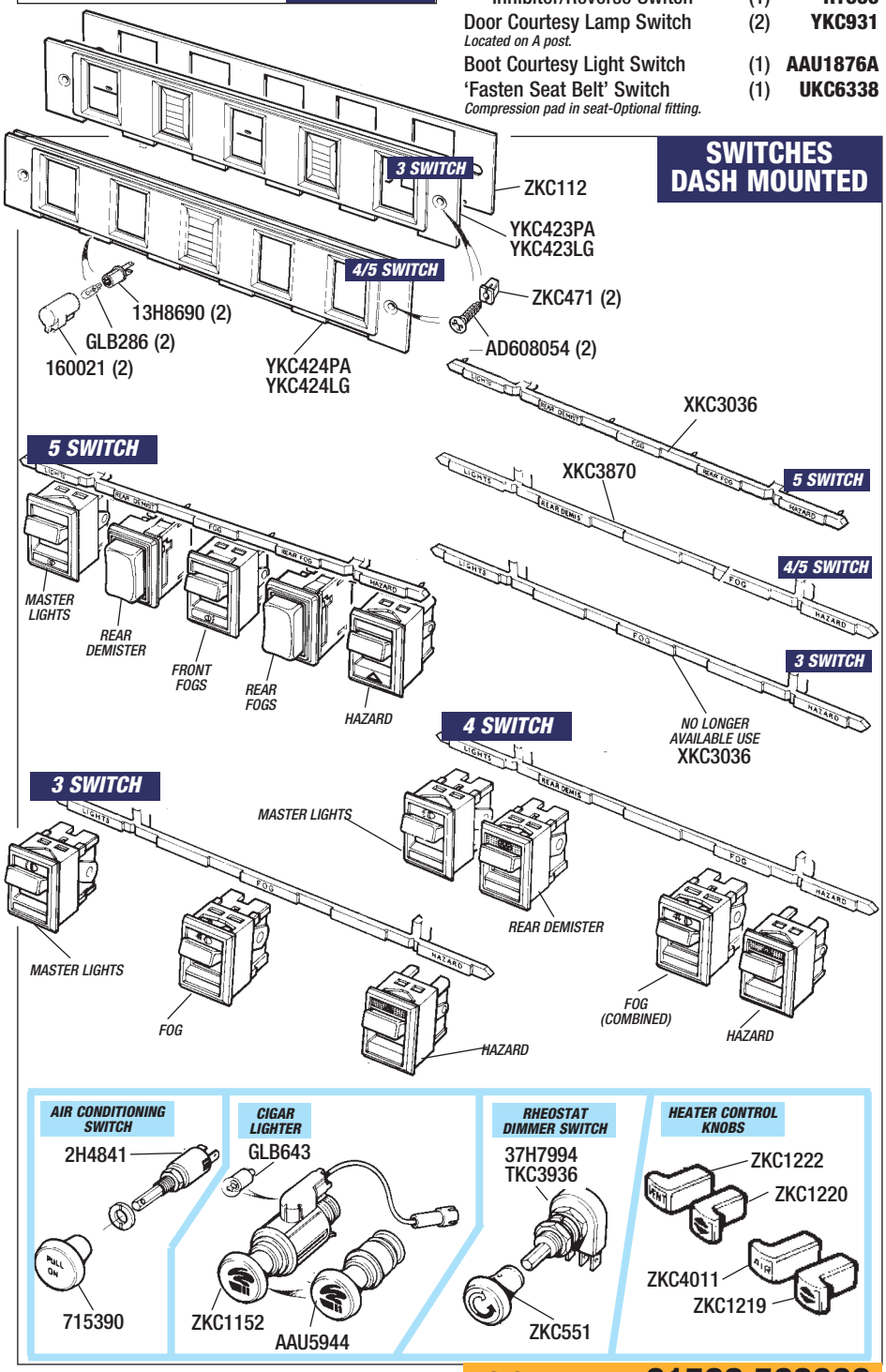

TO ORDER: 01522 568000
www.rimmerbros.co.uk

Relays/Fuses & Fittings

Description	Qty Req.	Part No.
Starter Relay	(1)	UKC7219
Day Headlamp Flash Relay *(Pektron)*	(1)	UKC7341
Headlamp Motor Relay *Headlamp lift system.*	(2)	DRC1820
Circuit Breaker *(Headlamp lift)*	(1)	151244
Headlamp Flash Relay	(1)	DRC1820
Horn Relay	(1)	DRC1820
Indicator/Flasher Relay	(1)	GFU2125
Hazard Warning Relay	(1)	GFU2204
Retaining Bracket *(for GFU2204)*	(1)	UKC1932
'Low Fuel' Warning Relay	(1)	UKC7096
Screw	(1)	SE104141
Washer	(1)	WP20X
Nut	(1)	AFU1233
Wiper 'Delay' Relay *Intermittent wipe system.*	(1)	AAU7087
Backing Plate	(1)	ULC3105
Screw	(2)	SE104201
Washer-Flat	(2)	WC104001
Washer-Spring	(2)	WL104001
Nut	(2)	NN104041
Suppressor *(Coil) Radio Anti-interference.*	(1)	UKC2211
Fuse Box Assembly;		
Vehicles to 1978 *Holds 4 fuses.*	(1)	138690
Vehicles from 1979 *Holds 12 fuses.*	(1)	AAU7228
Lid/Cover *(For fuse box 138690)*	(1)	37H4727
'In-Line' Fuse Holder;		
15 amp	(1)	UKC4446
20 amp	(1)	UKC4447
Fuse		
10 amp	(a/r)	GFS3010
15 amp	(a/r)	GFS3015
20 amp	(a/r)	GFS3020
25 amp	(a/r)	GFS3025
35 amp	(a/r)	GFS3035
50 amp	(a/r)	GFS3050

Description	Qty Req.	Part No.
Screw-Self Tapping*	(6)	GHF425
Locknut (Special)* **Locates relays to panel.*	(6)	570779
Screw-Self Tapping	(3)	AB610051
Washer-Flat	(3)	WP20X
Locknut (Special)	(3)	570779
Screw-Self Tapping+	(2)	GHF431
Washer-Flat+ *+Locates fuse box to panel.*	(2)	WP20X
Setscrew	(2)	SH106141
Washer-Flat	(2)	GHF300
Washer-Spring	(2)	WL106001
Nut	(2)	GHF212

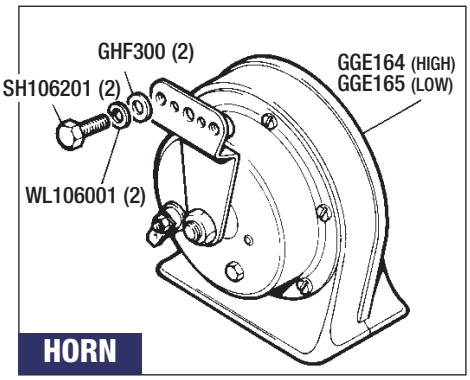

Horn

Description	Qty Req.	Part No.
Horn-High tone	(1)	GGE164
Horn-Low tone	(1)	GGE165
Air Horn (pair) Hella	(1)	RX1381
Setscrew	(2)	SH106201
Washer-Spring	(2)	WL106001
Washer-Flat	(2)	GHF300
Relay-Horn	(1)	DRC1820

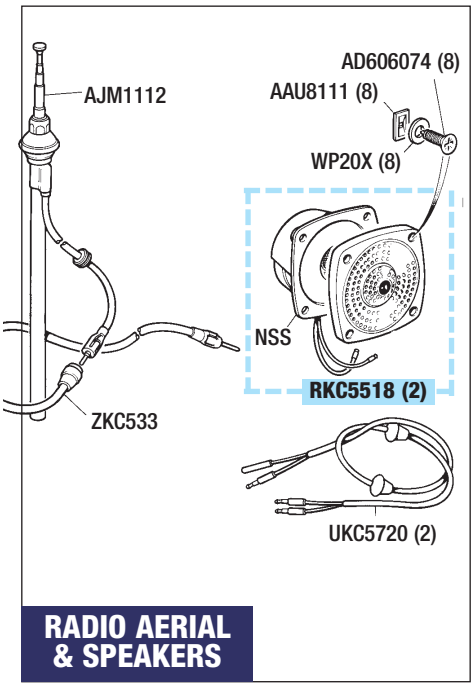

Radio Aerial & Speaker

Description	Qty Req.	Part No.
Radio Aerial	(1)	AJM1112
Extension Lead *(Aerial)*	(1)	ZKC533
Radio Speaker *(Door mounted)*	(2)	RKC5518
Extension Lead *(Speaker)*	(2)	UKC5720
Screw *(Speaker mounting)*	(8)	AD606074
Washer	(8)	WP20X
'Spire' Clip	(8)	AAU8111
In-Line Fuse Holder (15 amp) *For illustration see Relays/Fuses/Fittings.*	(1)	UKC4446
Fuse 15 amp	(1)	GFS3015

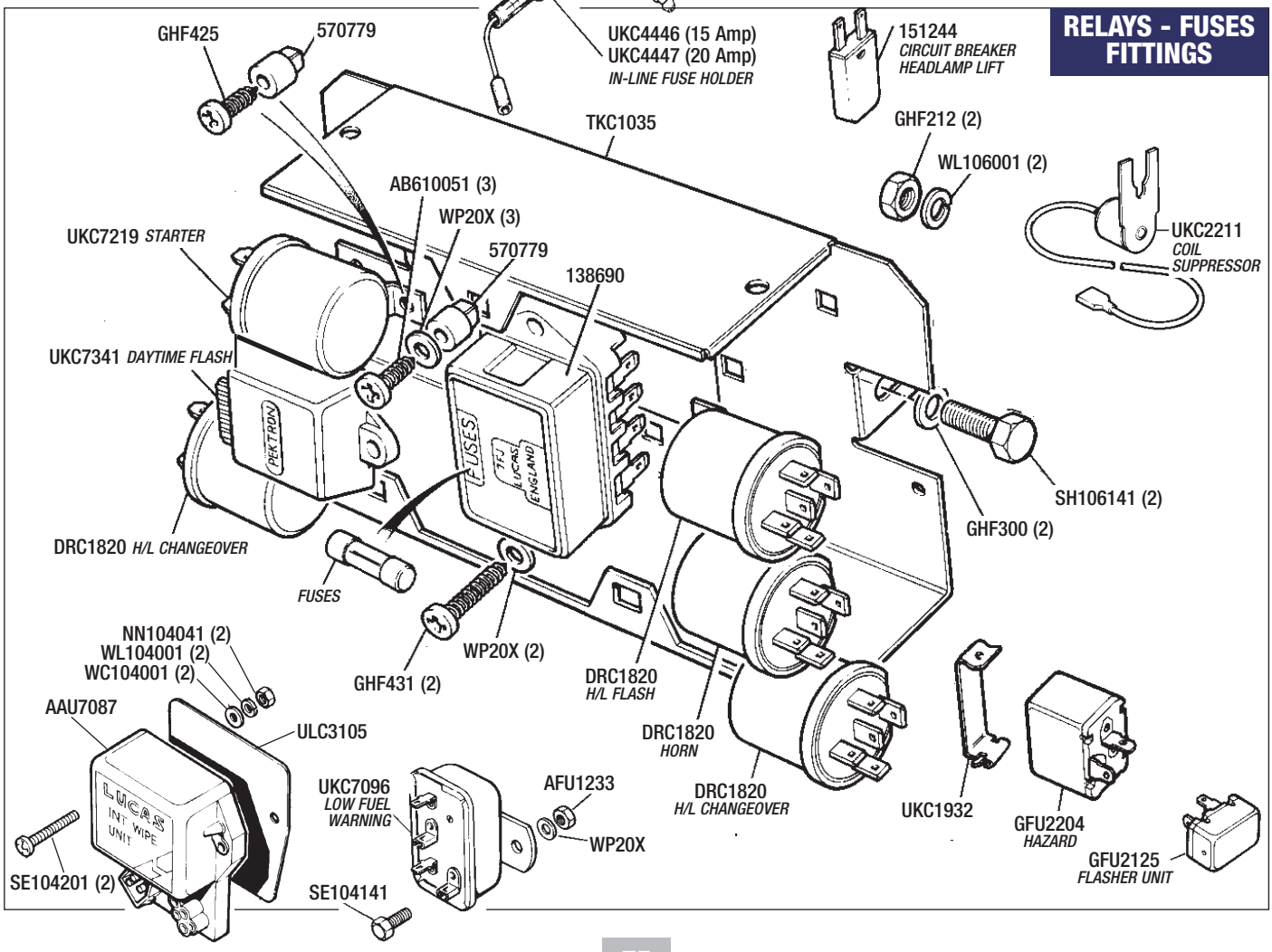

Description	Qty Req.	Part No.

Instrument Panel/Facia Components

Instrument Facia Cover* *(Clear plastic);*		
Early cars *(Cable re-set speedo)*	(1)	**UKC3826**
Late cars *(Button re-set speedo)*	(1)	**AEU1810**
Instrument Facia Panel*	(1)	**AEU1661**
Warning Light Cluster*	(1)	**AEU1825**
Casing *(Instrument mounting);*		
Early cars *(Cable re-set speedo)*	(1)	**UKC3822**
Late cars *(Button re-set speedo)*	(1)	**AEU1809**
See also; **Instruments & Cables-Pod Assembly.*		
Screw *(Self tapping)*	(2)	**AB108054**
Washer-Plain	(2)	**NKC480**
'Spire Clip'	(2)	**NKC468**
Printed Circuit;		
Early cars *(Cable re-set speedo)*	(1)	**UKC2409**
Late cars *(Button re-set speedo)*	(1)	**AEU1811**
Bulb (3 watt) *(Panel illumination)*	(4)	**GLB504**
Bulb (1.2 watt) *('Warning' illumination)*	(1)	**GLB286**
Bulb Holders;		
Large *(For GLB504)*	(4)	**13H4949**
Small-Square *('Low Fuel' For GLB286)*	(1)	**AAU3615**
Small *(For GLB286)*	(10)	**AAU3616**

Instruments & Cables

INSTRUMENTS & GAUGES

Instrument Panel Pod Assembly; *Complete with all instruments, printed circuit, facia cover etc.*		
Early Vehicles *(UK/MPH)* *Vehicles to VIN 402026, cable re-set speedo.*	(1)	**RKC756**
Early Vehicles *(European/KPH)* *Cable re-set speedo.*	(1)	**RKC757**
Early Vehicles *(USA/80 MPH)* *Cable re-set speedo.*	(1)	**RKC761**
Late Vehicles; ***Note:** Late vehicles with push-button re-set speedo & clock may be fitted with the early instrument pod assembly, but will require a clock re-set cable (UKC2413), speedo cable (GSD287), speedo re-set cable (UKC2410) & mounting plate AEU1196.*		
Screw *(Self tapping)*	(2)	**AB108054**
Washer-Plain	(2)	**NKC480**
'Spire Clip'	(2)	**NKC468**
Time Clock;		
Early cars *(Cable re-set type)*	(1)	**UKC2408**
Late cars *(Button re-set type)*	(1)	**AEU1635**
Mounting Plate-Clock *Early cars only with cable re-set.*	(1)	**AEU1194**
Temperature Gauge *(All cars)*	(1)	**AEU1633**
Speedometer Head *(MPH);*		
Cable Re-set type *(Early cars)*	(1)	**TKC240**
Button Re-set type *(Late cars)*	(1)	**AEU1629**
Speedometer Head *(KPH);*		
Cable Re-set type *(Early cars)*	(1)	**TKC4569**
Button Re-set type *(Late cars)*	(1)	**AEU1630**
Tachometer/Rev' Counter *(All cars)*	(1)	**TKC2510**
Battery Indicator Gauge;		
Early cars *(Cable re-set speedo)* *Will fit early or late vehicles.*	(1)	**UKC512**
Late cars *(Button re-set speedo)* *With 'Battery' logo, will fit early or late.*	(1)	**AEU1634**
Fuel Gauge;		
Early cars *(Cable re-set speedo)* *Will fit early or late vehicles.*	(1)	**UKC511**
Late cars *(Button re-set speedo)* *With 'Petrol pump' logo, will fit early or late.*	(1)	**AEU1632**

CABLES & PUSH BUTTONS

Clock Re-set Cable *(Early cars)*	(1)	**UKC2413**
Clock 'Push Button' Knob *(Late cars)*	(1)	**AEU1807**
Speedometer Cable;		
To VIN 402026 *(Early cars)* *Cable reset type speedo.*	(1)	**GSD287**
From VIN 402027 *(Late cars)* *Push button type speedo.*	(1)	**GSD388**
Speedo Trip Re-set Cable *(Early cars)*	(1)	**UKC2410**
Speedo 'Push Button' Knob *(Late cars)*	(1)	**AEU1808**
Mounting Plate-Flexible Drive *Early cars only with cable re-set speedo.*	(1)	**AEU1196**

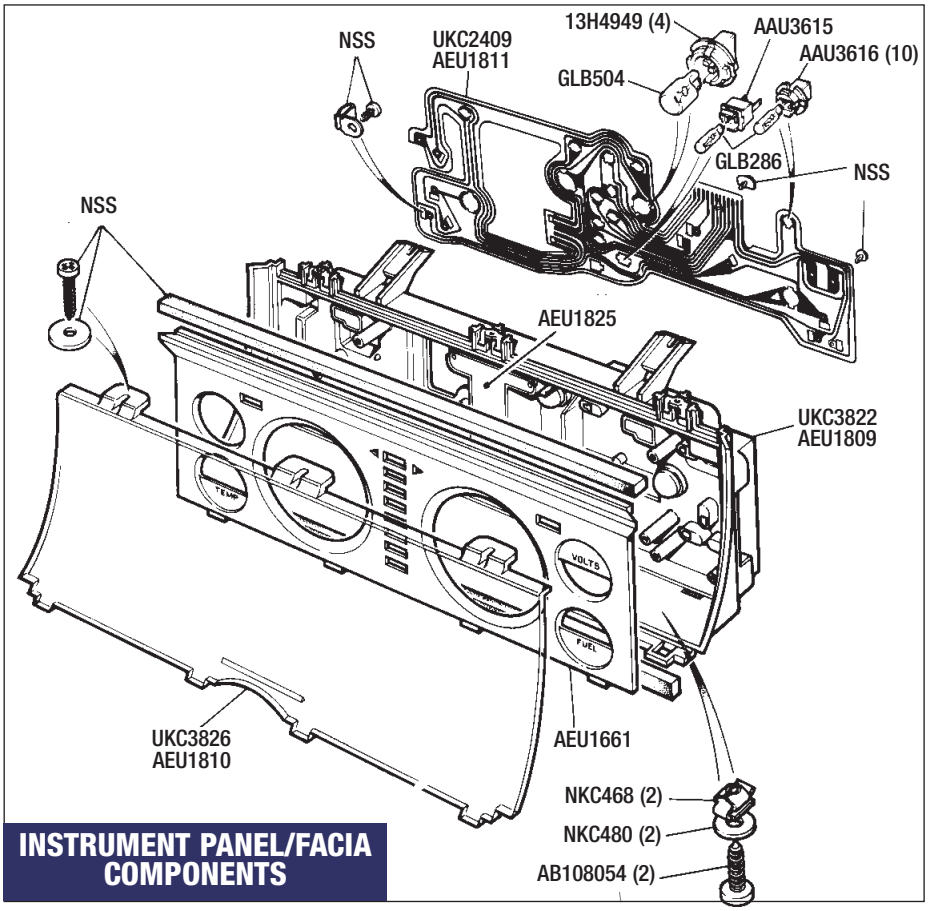

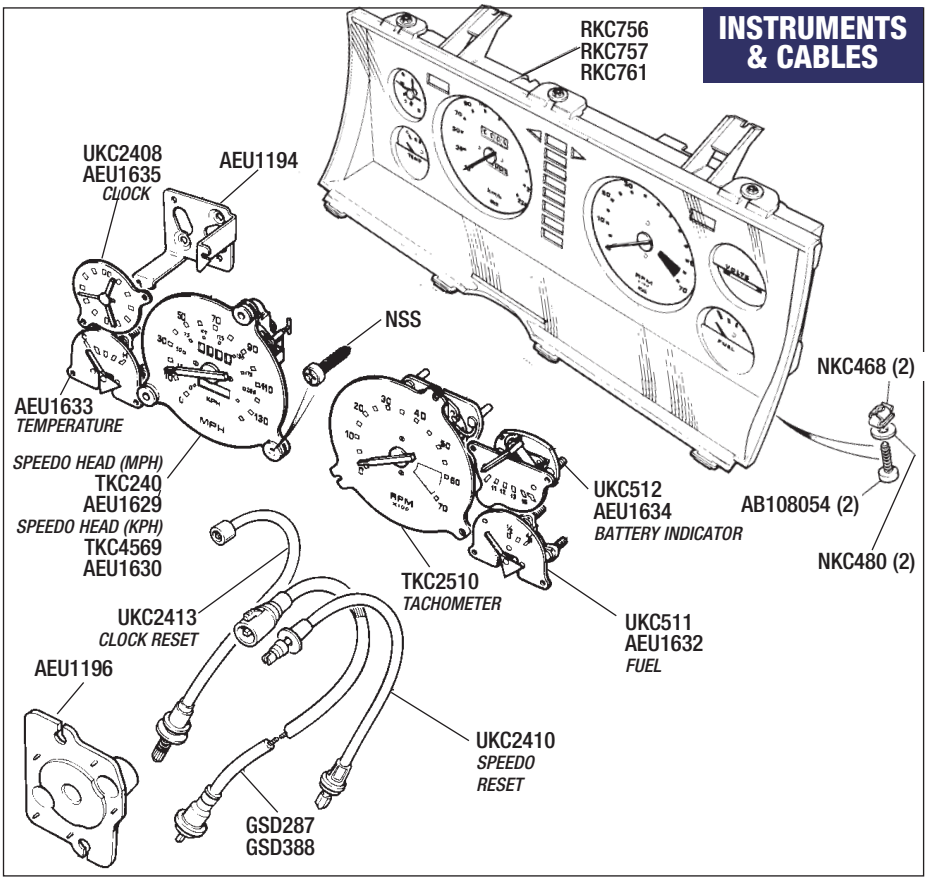

Oil Pressure Gauge Kit

Oil Pressure Gauge Kit	(1)	**RX1351/0**
'T' Piece *Use if retaining oil pressure warning light.*	(1)	**RX1352**
Bracket *(for remote mounting of gauge)*	(1)	**RB7050**

TO ORDER: 01522 568000
www.rimmerbros.co.uk

Battery & Fittings

Description	Qty Req.	Part No.
Battery *(Wet Charged);*		
Batteries NOT available by mail-order, collection only.		
Economy	(1)	**GBY3101**
Premium	(1)	**GBA3015**
Battery Conditioner	(1)	**RX1410**
Auto on/off - see accessories.		
Battery Charger *(12 volt)*	(1)	**GAC7106**
Battery Lead-'Positive';		
RHD Vehicles	(1)	**TKC3840**
LHD Vehicles	(1)	**UKC516**
Battery Clamp-'Positive' *(Inc Bolt)*	(1)	**GHF2755**
Clip-Lead Retaining	(2)	**626960**
Bolt-Lead to Terminal	(1)	**518903**
Nut *(For 518903)*	(1)	**GHF208**
Battery Earth Lead-'Negative'	(1)	**ULC1673**
Battery Clamp-'Negative' *(Inc Bolt)*	(1)	**GHF2750**
Bolt-Lead to Terminal	(1)	**518903**
Nut *(For 518903)*	(1)	**GHF208**
Washer-Shakeproof	(1)	**WE607**
Screw-Self Tapping	(1)	**SH106141**
Washer-Shakeproof	(2)	**WE106001**
Battery Retaining Kit	(1)	**RB7165**
Includes; Bar, clamp rods, nuts & washers.		
Battery Retaining Bar	(1)	**157910**
Clamp Rod	(2)	**610798**
Washer-Flat	(2)	**WP127**
Washer-Spring	(2)	**GHF331**
Nut-Standard	(2)	**GHF200**
'Wing Nut' *(Alternative to GHF200)*	(2)	**132068**
Seating Pad-Battery	(1)	**613155**

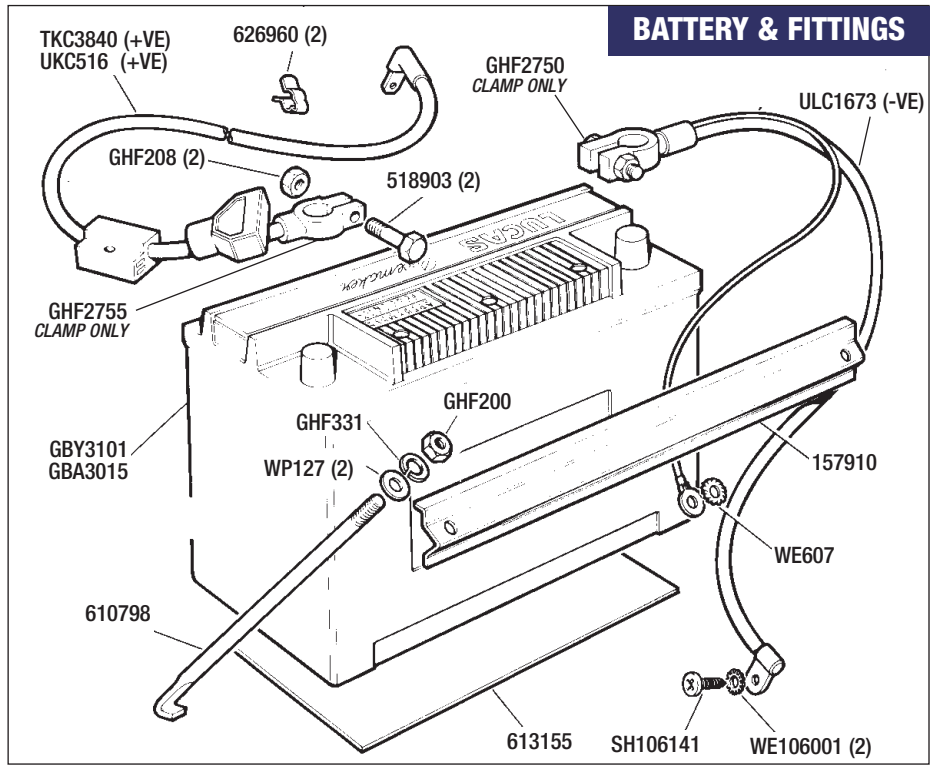

BATTERY RETAINING KIT
RB7165

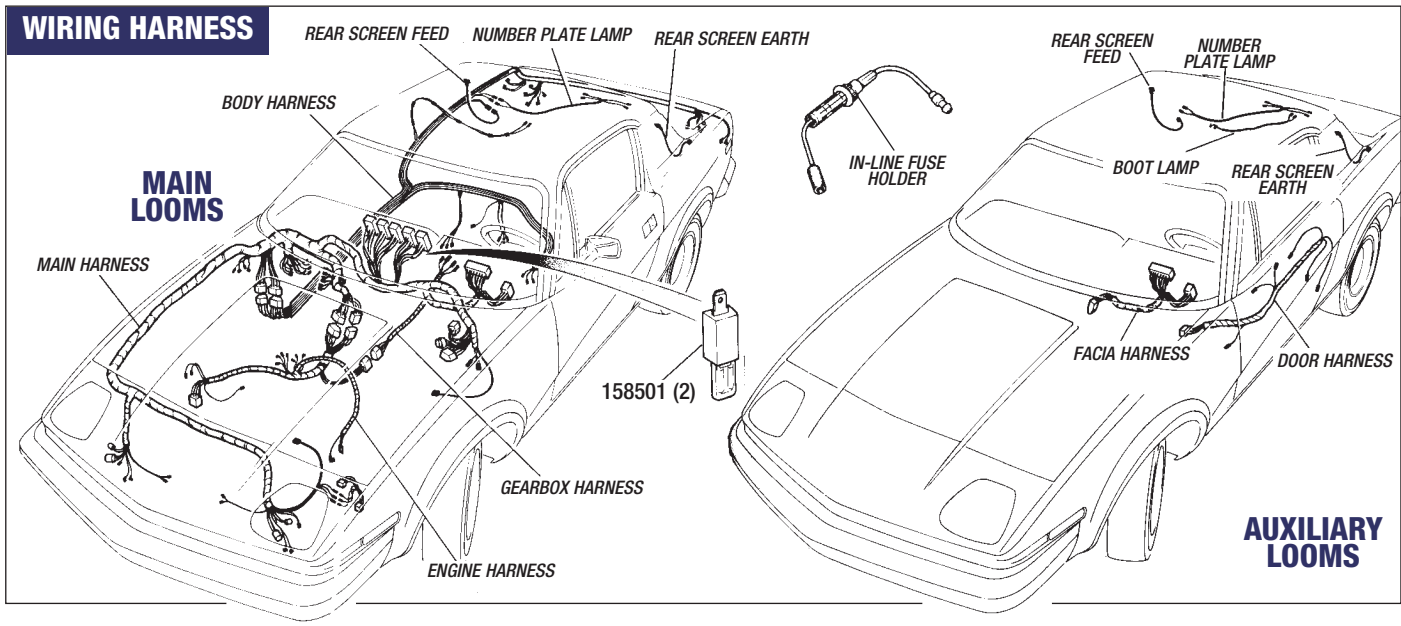

Wiring Harness

Note: *Availability of remanufactured looms is limited. If we show that a loom in not currently available (NCA), we can supply to order new looms providing we have an original, complete sample.Please contact us.*

MAIN LOOMS

Important Note: ALL looms listed are for UK specification Right Hand Drive vehicles, assembled without air conditioning. The 'BL' illustration for wiring harness's depicts a Left Hand Drive vehicle.

Description	Qty Req.	Part No.
Main Harness *(Coupes & Convertible);*		
To Body No T9603CG	(1)	**RKC123**
From T9604CG to ACG13001	(1)	**RKC2876**
From ACG13002 to ACG25001	(1)	**RKC3313**
From ACG25002 to VIN 200001	(1)	**PKC312**
From VIN 200001 to VIN 402001	(1)	**PKC1025**
From VIN 402001 & Future	(1)	**PKC1946**
Body Harness *(Coupes);*		
To Body No ACG13001	(1)	**TKC238**
From ACG13002 to ACG25001	(1)	**TKC3468**
From ACG25002 to VIN 404967	(1)	**RKC3630**
From VIN 404968 & Future	(1)	**RKC5125**
Body Harness *(Convertible);*		
To Body No VIN 200001	(1)	**RKC3536**
From VIN 200002 to VIN 404967	(1)	**RKC3630**
From VIN 404968 & Future	(1)	**RKC5125**
Engine Harness *(Coupes & Convertible);*		
To Body No ACG25001	(1)	**TKC1645**
From ACG359 to VIN 200001	(1)	**TKC1645**
From VIN 200002 & Future	(1)	**RKC5511**
Gearbox Harness *(Coupes & Convertible);*		
Manual Transmission		
To Body No ACG25001	(1)	**UKC3416**
From ACG25001 & Future	(1)	**UKC9200**
Automatic Transmission *(All Ranges)*		**UKC3417**
Diode *(Harness)*	(1)	**158501**
Number Plate Lamp Harness		*See Auxillary*
Rear Screen 'Feed'		*See Auxillary*
Rear Screen 'Earth'		*See Auxillary*

AUXILLARY LOOMS

Important Note: ALL looms listed are for UK specification Right Hand Drive vehicles, assembled without air conditioning. The 'BL' illustration for wiring harness's depicts a Left Hand Drive vehicle.

Description	Qty Req.	Part No.
Facia Harness *(Coupes & Convertible);*		
To VIN 200001	(1)	**RKC3607**
From VIN 200001 & Future	(1)	**RKC4348**
Door Harness *(Coupes & Convertible)*	(2)	**TKC3831**
Sheath *(Door harness protector)*	(2)	**BRC901**
Boot Lamp Harness *(Coupes & Convertible)*	(1)	**ULC3818**
Number Plate Lamp Harness	(1)	**UKC9350**
Coupes & Convertible		
'In-Line' Fuse Holder;		
See also; ***Horns/Relays/Fuses.***		
15 amp	(a/r)	**UKC4446**
20 amp	(a/r)	**UKC4447**
Fuse 15 amp *(Use as required)*	(a/r)	**GFS3015**
Fuse 20 amp *(Use as required)*	(a/r)	**GFS3020**
Rear Screen Harness;		
Coupes only with Heated rear screen.		
Feed	(1)	**UKC2427**
Earth	(1)	**UKC2428**

The Last TR

FEW TR traditionalists were happy when BL launched the TR7 in January 1975. Compared to previous TRs - right back to the Standard-Triumph prototype and the hugely successful TR2 - the newcomer was slower, quieter, looked "pretty", and had a hard top!

Yet the car was good to drive, a possession to be proud of... and just right for its market. The TR7 introduced many newcomers to sportscar ownership, and its concept has since been proven and exploited by other (sadly foreign) manufacturers.

Admittedly, the original fixed-head design was dictated by the American market, without which no specialist car can be commercially viable. Proposed USA legislation would have outlawed open cars, and by the time this was quashed the TR designers were committed.

Market research in the USA showed that simplicity and reliability were the key factors - nothing exotic please - and the price had to be keen. The latter was achieved by using existing components.

Another apparent disadvantage (again a concession to America conservatism) was the live rear axle, but at least it was done well, and special attention was given to all other aspects of suspension and steering. Roadholding and comfort were exceptional. Other saving graces were the high degree of built-in-safety and the eye-catching styling. The car looked faster than it was.

Strengths obviously outweighed weaknesses; the car sold so fast in the USA that the European launch was held until October, with a further delivery delay of many months.

From then, development in both finish and engineering was continuous. Although this transition did not become final until January 1978, the 5-speed SD1 gearbox was replacing the 4-speed as early as October 1976, and Borg-Warner automatic transmission was also available. In June 1979, the TR7 drophead was launched in the USA, and in March 1980 it became the first mass-produced sports convertible to be launched in Britain since the TR6 in 1969.

The car was getting better and better, until finally the TR8 was evolved and ready in 1980. Some 2,500 TR8's were exported to the USA that year, with the Rover 3.5 litre V8 engine producing startling performance. In British spec, (only 18 Rhd versions were produced) 60 mph would be reached in under 8 seconds, with 155bhp produced at 5250rpm.

It was not to be. The strength of the pound was now making the car too expensive for the vital America market. To sustain its market share it would have to be sold at a loss for some time, and BL's appalling financial position made this impossible.

The last TR rolled off the production line on October 5th 1981. The culmination of nearly 7 years work was never sold in the UK.

It wasn't the car's fault!

Sources: The Complete Guide to the Triumph TR7 and TR8 by William Kimberley; T. Gainsborough Fields.

THE HARRIS MANN STORY

The TR7 Design Evolution

HE started with buses. He now works on trains. He's created a best-selling watering can. And in between, his design credits include what was one of the British motor industry's most controversial cars, perhaps better loved by enthusiasts today than it was when launched in 1975. Introducing the designer of the TR7, Harris Mann.

"Stylist", rather than designer, is in fact the job description they give to the person who creates the bodywork of cars. Harris Mann is among the best of these fairly unusual animals ...but the fact that he became one was not in itself a product of some grand design. Harris began his working life with a 4-year apprenticeship at coach-builders Duple, where buses were the No 1 product. "A good grounding," he says, mainly in mechanics but also touching on the styling side of things. When he 'came out of his time', there was a 6-months period before his obligatory spell in HM's armed forces. He was able to fill it productively by spending time in the States with the design outfit, Raymond Lowey.

"Jobs were easier to get then," Harris reminds us. After his forces stint he was able to resume his life at Duple, then move on to Commer to work on vans and trucks - a blend of styling and engineering responsibilities. This proved an ideal preparation for a move to Ford, basically an engineering job, doing feasibility studies, but within the styling department. After 6 months he won a transfer to styling on a full-time basis.

Four years at Ford were both interesting and useful. Mann worked on the Capri, various truck programmes, the Transit and the Escort. Then came the chance to move to the Austin Morris organisation. A colleague at Ford was appointed Director in the design department at the AM group's Pressed Steel Fisher body plant. Harris was among a small coterie of people who took the chance to go with him.

After working initially on projects such as Marina and Allegro, the new team was moved to Longbridge where the ex-Ford influence proved less than popular. The colleague who had brought Harris into the fold then left in protest, and the team remained without a titular head, under the general wing of the engineering dept. "It was good fun, though," says Harris.

MEANWHILE, BACK AT THE RANCH...

In 1969, the search had started at sister company Triumph for a car to replace the TR6. The selection decision, as with so many others during this period of the British motor industry, would be influenced almost totally by the needs of the American market. At the time, it was believed the car might not appear in Europe at all.

Across the Atlantic, the profile of the "sportscar buyer" had become older... a person far more accustomed to his creature comforts. The competition included the mid-engined Porsche 914 and even the Datsun 240Z, with its coupe body and air-conditioning!

It was apparent that, if it were to succeed, the new car would have to discard the spartan image of its predecessors. The project to define it was named "Bullet", which gives a clue as to the direction in which the powers-that-be were aiming. And in 1971, the job dropped in the lap of Harris Mann.

Some of Mann's earliest sketches are shown on these pages (his illustration work is self taught - incidentally). Quite clearly the car would be very different from anything seen to date, and the initial designs established the ground very positively. Work would commence from the most challenging starting point possible. "It's much harder to take a mundane vehicle and try to make it look a lot more exciting, " says Mann, "So much better to take something very exciting and then water it down if you have to. You end up with a more individual product at the end of the day."

This is what happened with Harris Mann's TR7, the one truly fundamental change being to produce the car as a fixed head vehicle when the original designs (as the sketches clearly show) were for a T-bar. The inescapable reason for this was the tightening mass of American safety legislation, with uncertainty bordering on fear about the volume and content of further regulations which lay ahead. Open cars could well be outlawed. The Datsun 240Z, "selling like stink" in the States at the time, was after all a completely enclosed car. So the TR7, too, would launch as a fixed-head.

Apart from this, Harris tells us of relatively few significant compromises between first designs and the production model. As the pictures show, the team would

sketches clearly show) were for a T-bar. The inescapable reason for this was the tightening mass of American safety legislation, with uncertainty bordering on fear about the volume and content of further regulations which lay ahead. Open cars could well be outlawed. The Datsun 240Z, "selling like stink" in the States at the time, was after all a completely enclosed car. So the TR7, too, would launch as a fixed-head.

Apart from this, Harris tells us of relatively few significant compromises between first designs and the production model. As the pictures show, the team would have liked the bumpers to be colour-coded into the body, but production line difficulties allied to fears (again) over legislation defaulted the decision back to the familiar black plastic. The forward placing of the windscreen was also influenced by fears about legislation ... this time regarding headswing clearances proposed in the USA. These fears eventually proved groundless, because as the driver was moved back from the windscreen it was found that he could not see the overhead traffic lights so familiar to anyone who's driven Stateside. The legacy of this concern, however, lived on; the driver did still end up further than usual from the windscreen, which gives the illusion of a roomy interior but achieves it at the expense of space in the rear.

SELECTION PROCESS

The design which Mann's team took to the full-size mock-up stage was not, in fact, the only one considered within the company. The Italian designer, Michelotti, who takes the credit for much of Austin Morris and BL's design work during this period, had also been asked to work on the project, and his design too had reached model stage.

Finally the two cars were taken to a meeting at Triumph in Coventry, where Lord Stokes and others viewed them side by side. Mann was asked to remodel the swage line which was originally down the side of the car, and when this was done his design was given the green light.

This was in the summer of 1971, and the car did not come to the market until January 1975. Apart from modifications, however, the car would now pass from the control of Harris Mann and his team. One modification, he recalls, removed a concertina feature behind the bumper, intended to help take up impact. Another involved the rear wheel arch, where extra-long suspension movement created too large a visual gap in the unladen condition.

For the record, a styling team was not generally involved in engineering decisions such as these, it was merely required to take engineering factors into account in its work. As a prime example, Mann and his colleagues designed the TR7 without knowing what engine would go into it; the team was merely given an engine size and silhouette to enable it to style the body properly.

Engineering factors could sometimes make a designer's work a nightmare, Mann tells us, but it sounds as if the TR7 project ran more smoothly than most. Obviously the mechanicals constrained the designer as to what sort of body shape could be put around them, but Mann's complaints centre around smaller items like the front flashers (from the Marina), the door handles (left and right hand to become a common design), and the windscreen surround which changed from black to stainless.

In fact, Mann seems to have found the TR7 more satisfying than frustrating. "The fact that the front of the car effectively tapered right down was just what us designers wanted. We didn't want high bonnets, we wanted flat, flowing fronts. ... the Dolomite engine being half the Stag V8 engine, the height aspect was very good, so from the screen onwards you can start going downwards rather than outwards. That was something car designers always wanted."

Prior to the TR7, Mann had created the Austin Princess, which had introduced the wedge theme to UK motor design, and certainly he was able to develop the theme further with the TR7. It established a pattern which has been continued by others to this day... though latterly perhaps influenced more by CD factors than by creative considerations.

Mann at one time ran a company TR7 (a drop-head). It was an enjoyable car, he recalls, "I thought the lines of the convertible were great and I feel that we would have been happier back in 1971 designing a soft-top version of the Bullet than the fixed head we were instructed to do." Other if-onlys include a wish that the car could have seen more development during its lifetime, also that the TR8 should have been further modified from the TR7. Sentiments which are echoed by so many today.

There is no business in which a designer can be trained to accept imposed change and compromise with a philosophical outlook, but today, Harris Mann's regrets are more for the British motor industry than about the past commercial realities of Austin Morris and BL. The automotive side in this country, he says with classic understatement, "has dropped off a lot".

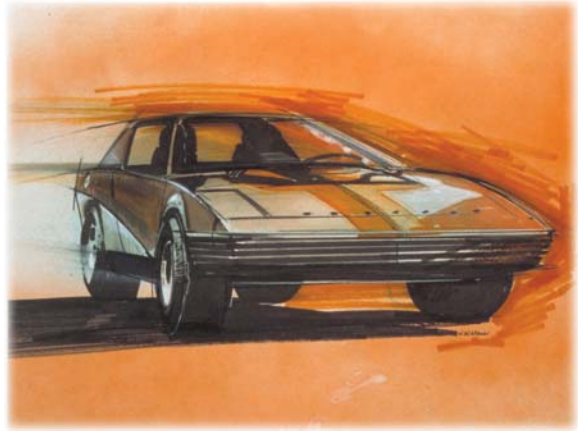

Many years ago Mann designed a watering can which is still being made by the thousand. He wishes he had a royalty on it. He admits he'll dabble in anything. He's "done industrial robots, bits for cycles," but it's mainly transportation. "I like all forms of transport and I like designing anything that runs along and carries people around."

Mann now works by providing his expertise to a variety of consultants in the transport field, also by part time lecturing at university, and tells us that his recent involvement has been with trains rather than cars. Back to his first job ... public transport. "If I did cars all the time, as I sat in the traffic jam I would probably ask myself if it wasn't morally right for more people to be using public transport. Come to think of it, that would probably make motoring exciting again."

BODY REPAIR PANELS

In addition to the comprehensive range of body panels that we stock, we also supply a wide range of repair panels that make a cost effective alternative to the original full panels. The body repair panels shown here (which are steel unless otherwise stated), are listed again under their relevant headings on the following pages.

Description	Qty Req.	Part No.
1) Front Wing 'Rear Lower'- Repair Panel;		
Rh	(1)	**RB7218**
Lh		**RB7219**
2) Front Wing 'Wheel Arch'- Repair Panel *(Steel)*;		
Rh	(1)	**RB7224**
Lh	(1)	**RB7225**
2) Front Wing 'Wheel Arch'- Repair Panel *(Fibreglass)*;		
Rh	(1)	**RB7187**
Lh	(1)	**RB7188**
3) Front 'Inner Wheel Arch'- Repair Panel;		
Rh *(Outer section)*	(1)	**RB7356**
Lh *(Outer section)*	(1)	**RB7357**
4) Front Panel 'Repair Section';		
Front	(1)	**RB7169**
5) Front Panel 'Repair Section';		
Rear *(Bonnet support)*	(1)	**RB7170**
6) Turret Repair Panel;		
Upright Rh	(1)	**RB7156**
Upright LH	(1)	**RB7157**
7) Inner Flitch Repair Panel;		
Rear Rh	(1)	**RB7234**
Rear Lh	(1)	**RB7235**
8) Inner Flitch Repair Panel;		
Front Rh	(1)	**RB7202**
Front Lh	(1)	**RB7203**
9) Turret Repair Panel;		
Top Rh	(1)	**RB7162**
Top Lh	(1)	**RB7163**
10) Floor Repair Panel-Front Rh	(1)	**RB7194**
11) Floor Repair Panel-Front Lh	(1)	**RB7195**
12) Floor Repair Panel-Rear Rh	(1)	**RB7172**
13) Floor Repair Panel-Rear Lh	(1)	**RB7173**
14) Door Bottom Repair Panel;		
Rh	(1)	**RB7147**
Lh	(1)	**RB7148**
15) Door Skin *(Original specification)*;		
Rh	(1)	**YKC75**
Lh	(1)	**YKC74**
16) Rear Deck Repair Panel *(Coupe Only)*;		
Rh	(1)	**RB7248**
Lh	(1)	**RB7249**
17) Rear 'Inner Wheel Arch'- Outer Section Repair Panel;		
Rh	(1)	**RB7364**
Lh	(1)	**RB7365**
18) Rear Wing 'Lower Half'- Repair Panel *(Fibreglass)*;		
Rh	(1)	**RB7151**
Lh	(1)	**RB7152**
19) Rear 'Lower' Sill - Panel (Outer);		
Rh	(1)	**WKC80**
Lh	(1)	**WKC79**
NB: For rear lower inner sill panels refer to; Rear Wing & Arches and Rear Panels & Rear Deck.		
20) Rear Wing 'Wheel Arch'- Repair Panel;		
Rh	(1)	**RB7216**
Lh	(1)	**RB7217**
21) Rear Wing 'Front Lower'- Repair Panel;		
Rh	(1)	**RB7208**
Lh	(1)	**RB7209**
22) 'Quick-fit' Outer Sill;		
Rh	(1)	**RB7204**
Lh	(1)	**RB7205**
23) Bulk Head Repair Panel		
RH	(1)	**RB7664**
LH	(1)	**RB7663**
24) Rear Floor Repair		
RH	(1)	**RB7666**
LH	(1)	**RB7665**
25) Outer Trailing Arm Repair		
RH	(1)	**RB7669**
LH	(1)	**RB7667**
26) Inner Trailing Arm Repair		
RH	(1)	**RB7670**
LH	(1)	**RB7668**

BODY RESTORATION KIT

We have put together an excellent restoration kit which will help you get started and make substantial savings!

The kit includes:-

- *1 pair front wings (original)*
- *1 pair front inner wheel arch repair panels*
- *1 headlight panel (original)*
- *1 set of 4 front inner flitch repair panels (front and rear of turret)*
- *1 pair door skins (original)*
- *1 pair full sills (original)*
- *1 pair rear wing outer arch repair panels*
- *1 pair rear lower (outer) sill panels*

Body Restoration Kit (1) **RB2016**

BODY REPAIR PANELS

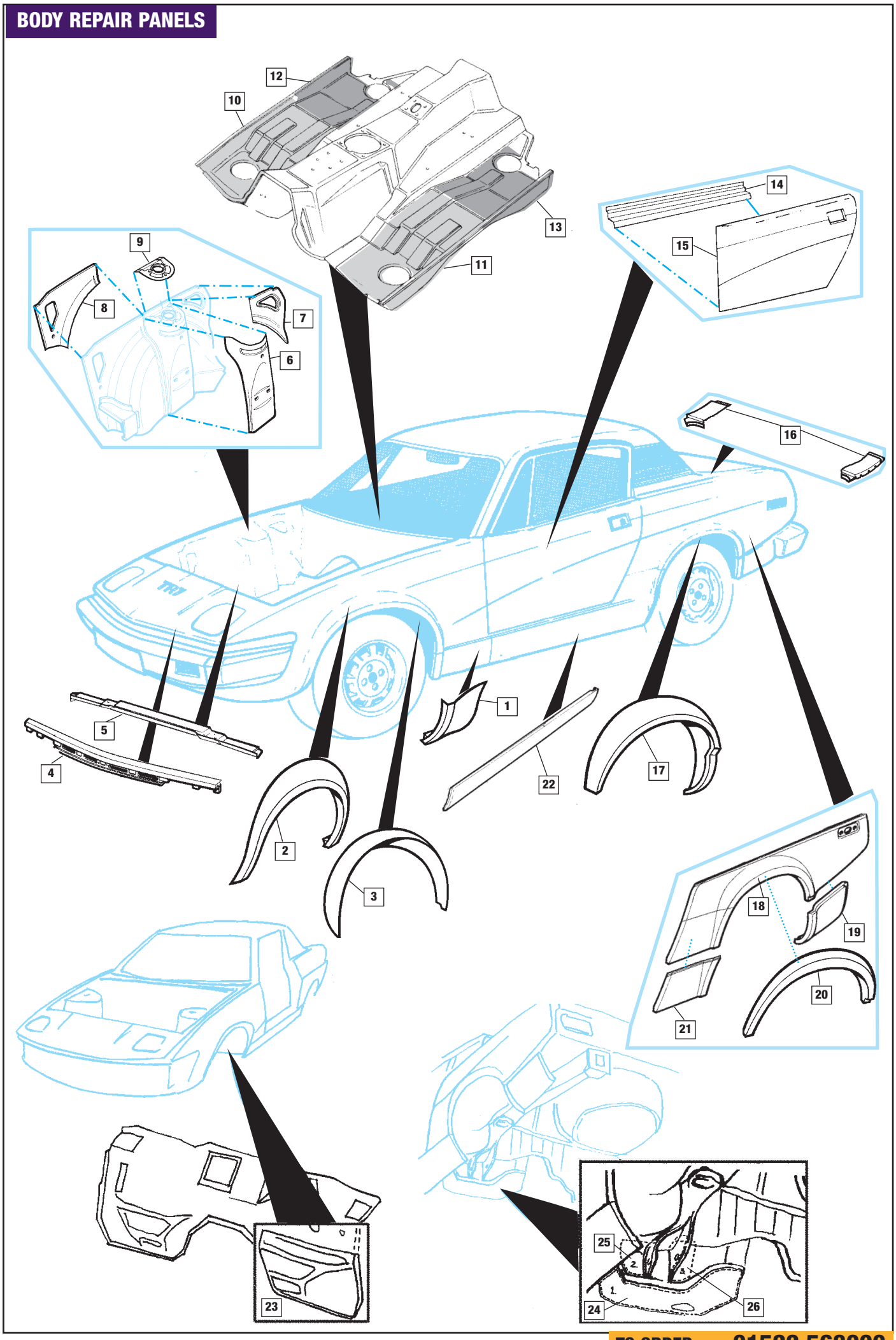

TO ORDER: 01522 568000
www.rimmerbros.co.uk

Description	Qty Req.	Part No.

Bodyshell

Bodyshell;
Availability of both new & reconditioned body shells is limited. Please enquire for current availability & prices.
Shells supplied less bonnet, boot lid & doors.

Convertible		
New	(1)	**WKC4387**
Refurbished	(1)	**WKC4387R**
Coupe		
New	(1)	**WKC4435**
Refurbished	(1)	**WKC4435R**

Chassis/Vin No Plate

Chassis Number Plate *(to 1979)*	(1)	**RB7539**
Vin Number Plate *(1979 on)*	(1)	**TKC4542**

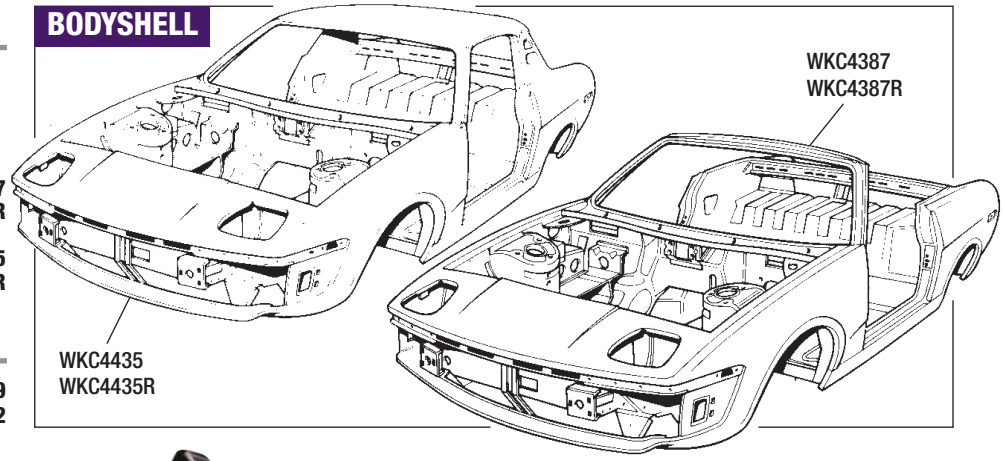

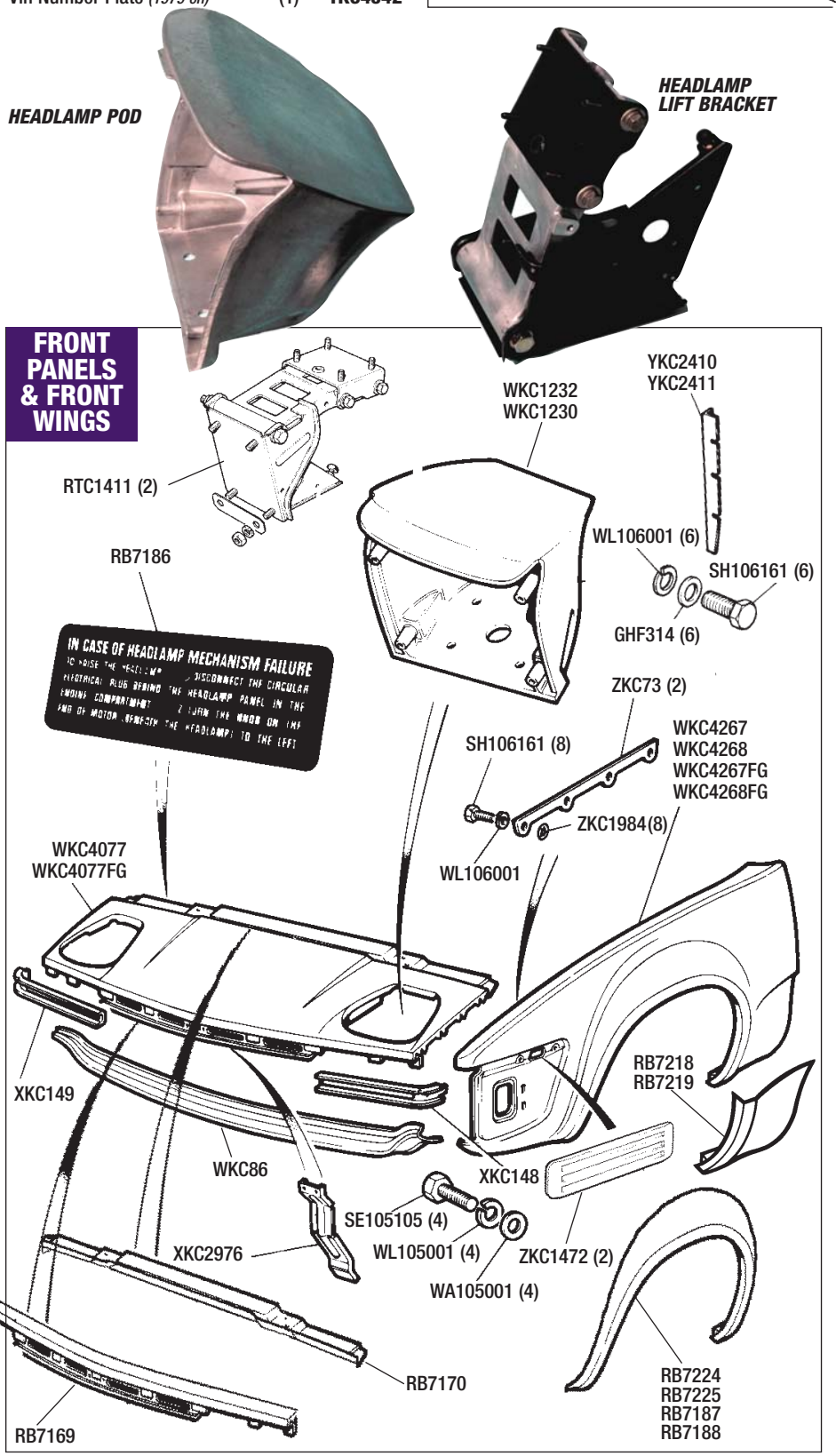

Front Panel & Front Wing

See also; Body Repair Panels.

Front Panel Assembly;		
Original	(1)	**WKC4077**
Fibreglass	(1)	**WKC4077FG**
Front Panel Repair Sections;		
Front *Item 4 in Body Repair Panels (page 82).*	(1)	**RB7169**
Rear *(Bonnet support)* *Item 5 in Body Repair Panels (page 82).*	(1)	**RB7170**
Front Wing; *When fitting front wing(s) to early vehicles (ACG/TCG), closing panel(s) YKC2411 & YKC2410 are required to attach front wing(s) to 'A' post.*		
Original		
Rh	(1)	**WKC4268**
Lh	(1)	**WKC4267**
Fibreglass		
Rh	(1)	**WKC4268FG**
Lh	(1)	**WKC4267FG**
Front Wing 'Wheel Arch'-Repair Panel; *Item 2 in Body Repair Panels (page 82).*		
Steel		
Rh	(1)	**RB7224**
Lh	(1)	**RB7225**
Fibreglass		
Rh	(1)	**RB7187**
Lh	(1)	**RB7188**
Front Wing 'Rear Lower'- Repair Panel; *Item 1 in Body Repair Panels (page 82).*		
Rh	(1)	**RB7218**
Lh	(1)	**RB7219**
Wing Closing Panel; *Usually required when replacing front wing, fits between wing & 'A' post. Refer to front wings for details.*		
Rh	(1)	**YKC2411**
Lh	(1)	**YKC2410**
Setscrew *Locates YKC2411/2410 to 'A' post.*	(6)	**SH106161**
Washer-Flat *(For SH106161)*	(6)	**GHF314**
Washer-Spring *(For SH106161)*	(6)	**WL106001**
Closing Panel		
Rh	(1)	**XKC149**
Lh	(1)	**XKC148**
Support Bracket *Front lower panel to front upper.*	(1)	**XKC2976**
Front Lower Panel	(1)	**WKC86**
Headlamp Pod*		
Rh	(1)	**WKC1232**
Lh	(1)	**WKC1230**
Headlamp Pod Lift Bracket & Hinge Assembly* ***Unbelievably Low Price!*** **See also; ELECTRICAL- Headlamp Mounting & Headlamp Lift System.*	(2)	**RTC1411**
Information Label- Headlamp Lift Instructions *Manual operation.*	(1)	**RB7186**
'Plate' Washer *Front wing to headlamp panel.*	(2)	**ZKC73**
Setscrew	(8)	**SH106161**
Washer-Spring	(8)	**WL106001**
Spire Nut	(8)	**ZKC1984**
Blanking Plate *UK specification vehicles. Required if cruise lights not fitted.*	(2)	**ZKC1472**
Setscrew*	(4)	**SE105105**
Washer-Spring*	(4)	**WL105001**
Washer-Flat* **Retains plate ZKC1472 & front grille strip.*	(4)	**WA105001**

Bonnet Assembly & Fittings

Description	Qty Req.	Part No.
Bonnet;		
Early Vehicles *Without double centre bulge.*	(1)	**WKC170**
Late Vehicles *(With double centre bulge);*		
Original Specification	(1)	**XKC2242**
Modified Specification*	(1)	**XKC2242Mod**
**Availability of original spec' bonnets is limited. This variation is a modified Early spec' bonnet with the double bulge 'handworked' in. It is indistinguishable from the original apart from the bulge sitting 4" further forward. This does not affect any engine clearance requirements for the TR7 or TR8*		
Bonnet (Fibreglass) Late Vehicles *With double centre bulge*	(1)	**XKC2242FG**
Bonnet Seal Kit *(All bonnets)* *Includes sufficient length of seal to replace 3 original seals (cut to fit).*	(1)	**RB7093**
Air intake Scoop *Remanufactured in fibreglass, as original. Includes over-centre clips, less rubber seals. Allows fresh air into cockpit & heater system. Fits on bulkhead below bonnet centre louvres in engine compartment.*	(1)	**XKC3604FG**
Seals-Air Intake Scoop;		
Upper Seal *(Air scoop to bonnet)*		
For original Scoop	(1)	**YKC1887**
For fibreglass Scoop	(1)	**YKC1887FG**
Lower Seal *(To bulkhead)*	(1)	**YKC320**
End Grommet	(2)	**YKC3673**
Setscrew* *(Air scoop to bulkhead)*	(2)	**GE106141**
Washer-Spring* *(For GE106141)*	(2)	**WL106001**
Washer-Flat* *(For GE106141)*	(2)	**GHF300**
'Push' Nut* *(For GE106141)* **Alternative fittings, Early vehicles only.*	(2)	**ZKC1984**
Rubber Buffer *(Bonnet seating)*	(2)	**ZKC3514**
Fixing 'Peg' *(Threaded)*		
Pre 1977	(2)	**ZKC494**
1978 on	(2)	**ZKC3521**
Washer	(2)	**GHF300**
Nut	(2)	**GHF212**
Bonnet Hinge	(2)	**626586**
Adjusting Shim *(Bonnet alignment)* *Use as required.*	(a/r)	**ZKC2580**
Plate *(Drilled & tapped)*	(2)	**ZKC19**
Setscrew *(Hinge locating)*	(4)	**SH106301**
Washer-Spring	(4)	**GHF300**

BONNET STAY & FITTINGS

Description	Qty Req.	Part No.
Stay Assembly	(1)	**YKC2501**
Screw-Special *(Lower)*	(1)	**ZKC3726**
Washer-Special *(Lower)*	(1)	**W5600061**
'Jacknut' *(Lower)*	(1)	**ZKC2228**
Screw-Special *(Upper)*	(2)	**SE105121**
Washer-Spring *(Upper)*	(2)	**WL105001**
Washer-Flat *(Upper)*	(2)	**WA105001**
Washer-Flat *(Upper)*	(2)	**GHF333**
'Jacknut' *(Upper)*	(2)	**ZKC2226**

BONNET LOCK & FITTINGS

Description	Qty Req.	Part No.
Bonnet Lock Catchplate;		
Vehicles to VIN 202093	(1)	**YKC150**
Vehicles from VIN 202094	(1)	**YKC4466**
Setscrew *(Lock locating)*	(4)	**SH108201**
Washer-Spring	(2)	**GHF382**
Washer-Flat	(2)	**GHF301**
Striker Pin Assembly	(1)	**ZKC649**
Setscrew *(Striker pin)*	(2)	**SH108201**
Washer-Spring	(2)	**GHF382**
Washer-Flat	(2)	**WM58**
Handle/Release Cable Assembly	(1)	**630573**
Grommet	(1)	**61917**
Nipple *(Release cable)*	(1)	**AUE34**
Screw *(Cable retaining)*	(1)	**559980**

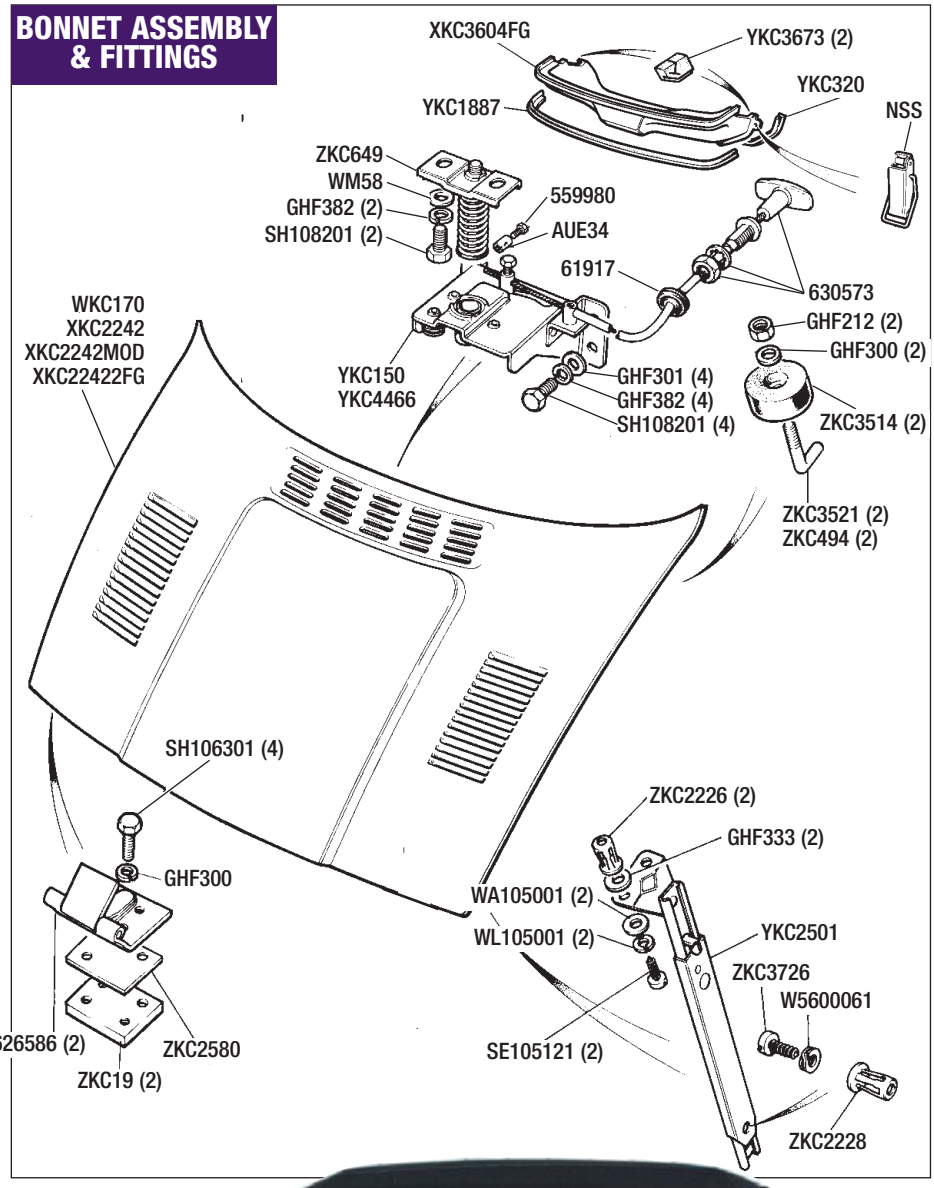

TO ORDER: 01522 568000
www.rimmerbros.co.uk

Front Wheel Arches & Chassis Members

See also; Body Repair Panels.

Description	Qty Req.	Part No.
Front Inner Wheel Arch Full *(Remanfactured);*		
Rh	(1)	**WKC2449P**
Lh	(1)	**WKC2448P**
Repair Panel Front-'Inner Wheel Arch'; *Outer section. Item 3 in Body Repair Panels. (Page 82).*		
Rh	(1)	**RB7356**
Lh	(1)	**RB7357**
Flitch Panel Assembly; *See also Flitch Repair Panels. Complete flitch panels are now supplied separately in 3 sections (A, B & C in illustration). If all 3 sections are required, order WKC5049K or WKC5048K. Alternatively order sections A, B or C for either side or purchase the repair sections shown in the bottom right hand corner of the illustration.*		
RHD Vehicles		
3 - Piece Kit		
Right Hand	(1)	**WKC5049K**
Left Hand	(1)	**WKC5048K**
Individual Sections		
Right Hand		
Front Section (A)	(1)	**WKC5049A**
Middle Section (B)	(1)	**WKC5049B**
Rear Section (C)	(1)	**WKC5049C**
Left Hand		
Front Section (A)	(1)	**WKC5048A**
Middle Section (B)	(1)	**WKC5048B**
Rear Section (C)	(1)	**WKC5048C**
LHD Vehicles *Currently not available. Use RHD versions & convert to LHD. (Transfer bracketry).*		
Right Hand	(1)	**(WKC5051)**
Left Hand	(1)	**(WKC5050)**
Blanking Plate *(Plastic); Inner flitch plates, TR7 only.*		
Rh	(1)	**ZKC806**
Lh	(1)	**ZKC805**

FLITCH REPAIR PANELS;

*See also **Body Repair Panels. (Page 82)***

Description	Qty Req.	Part No.
Inner Flitch Repair Panel; *Items 8 & 7 in Body Repair Panels. (Page 82)*		
Front		
Rh	(1)	**RB7202**
Lh	(1)	**RB7203**
Rear		
Rh	(1)	**RB7234**
Lh	(1)	**RB7235**
Turret Repair Panel; *Items 6 & 9 in Body Repair Panels. (Page 82)*		
Upright		
Rh	(1)	**RB7156**
Lh	(1)	**RB7157**
Top		
Rh	(1)	**RB7162**
Lh	(1)	**RB7163**
Brake Information Label	(1)	**RB7150**
Information Label Kit *See also; **ACCESSORIES**. **Kit is per CAR & includes 1 of each of the following labels;** Tyre pressures, Engine Data, E11, Air Box, Headlamps, Unipart, Brake Data, & Hood instructions. The labels are also available separately.*	(1)	**RB7091**
Mounting Bracket *(Windscreen washer bottle);*		
RHD Vehicles	(1)	**XKC3769**
LHD Vehicles	(1)	**XKC3768**
Battery Tray;		
RHD Vehicles	(1)	**WKC26**
LHD Vehicles	(1)	**WKC25**
Support Bracket *(Battery tray);*		
RHD Vehicles	(1)	**XKC194**
LHD Vehicles	(1)	**XKC195**
Mounting/Closing Panel *(Headlamp pod mounting);*		
Rh	(1)	**XKC17**
Lh	(1)	**YKC3280**
Closing Panel *(Radiator duct);*		
Rh	(1)	**YKC1552**
Lh	(1)	**YKC1551**
Front Chassis Crossmember;		
To ACG25001 & ACW30001 *Bracing channel*	(1)	**YKC61**
From ACG25002 & ACW30002 *Box section*	(1)	**WKC3672**
Front Chassis Leg		
Rh	(1)	**WKC5060**
Lh	(1)	**WKC5059**
Anchor Bracket		
Rh	(1)	**ZKC2786**
Lh	(1)	**ZKC2785**

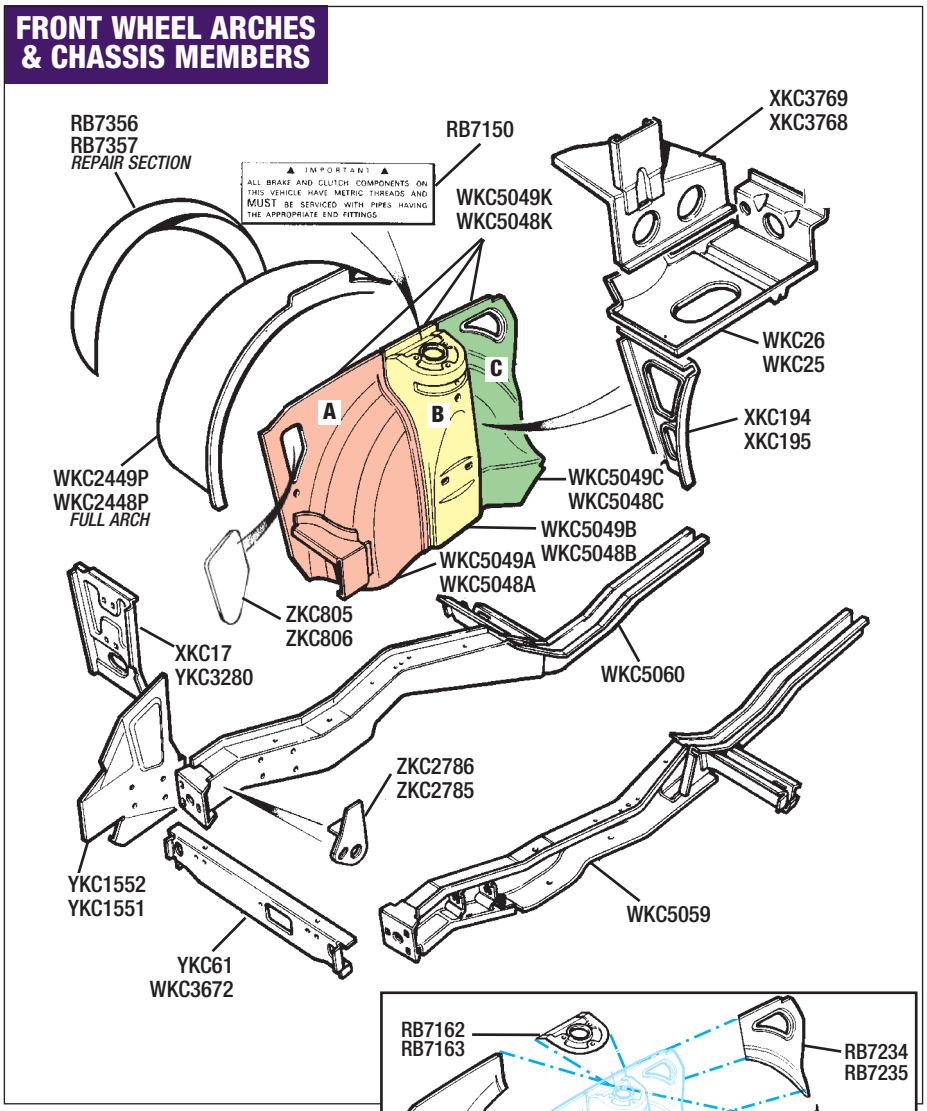

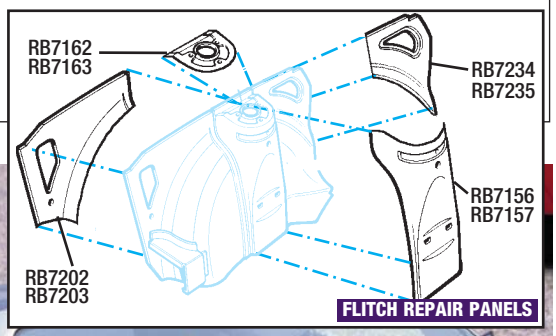

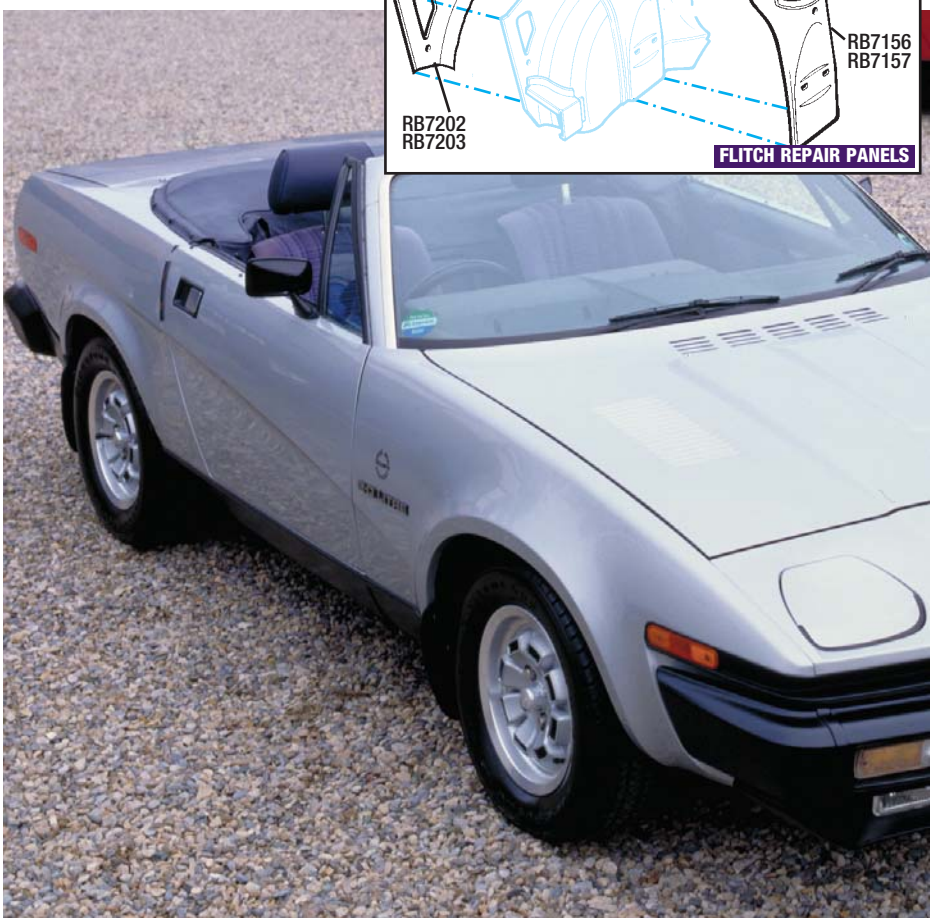

Description | Qty Req. | Part No. | Description | Qty Req. | Part No. | Description | Qty Req. | Part No.

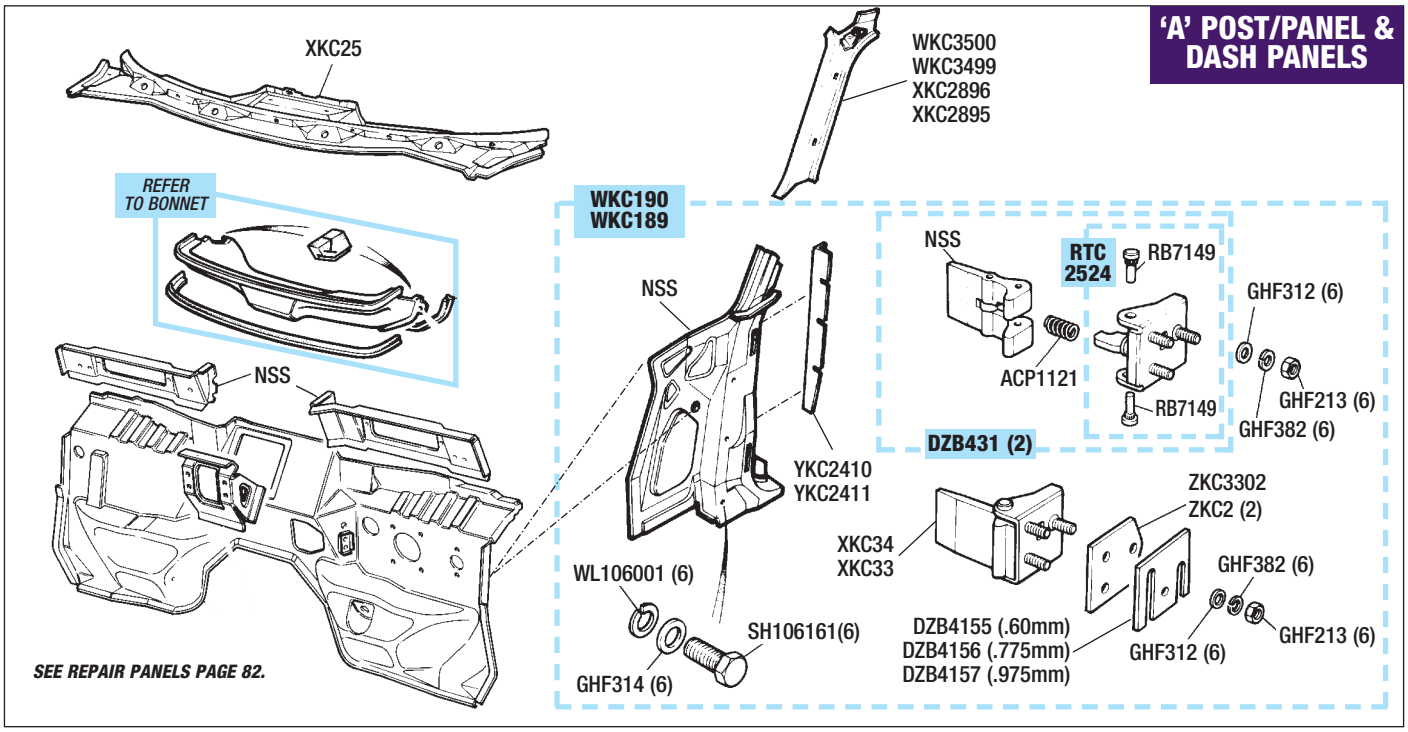

'A' Post/Panel & Dash Panels

'A' Post Panel Assembly-Lower *Including door hinges, Convertible & Coupe.*		
Rh	(1)	**WKC190**
Lh	(1)	**WKC189**
Wing Closing Panel **Usually required when replacing front wing, fits between wing & 'A' post.*		
Rh	(1)	**YKC2411**
Lh	(1)	**YKC2410**
Setscrew *Locates YKC2411/2410 to 'A' post.*	(6)	**SH106161**
Washer-Flat *(For SH106161)*	(6)	**GHF314**
Washer-Spring (For SH106161)	(6)	**WL106001**
'A' Post Assembly-Upper;		
Convertible		
Rh	(1)	**WKC3500**
Lh	(1)	**WKC3499**
Coupe		
Rh	(1)	**XKC2896**
Lh	(1)	**XKC2895**
Door Hinge Assembly-Upper	(2)	**DZB431**
Upper Door Hinge Repair Kit *Includes pins & plate/studs.*	(2)	**RTC2524**
Upper Door Hinge Pin only *2 pins required per hinge.*	(4)	**RB7149**
Spring-Upper Hinge *Not included in repair kit.*	(2)	**ACP1121**
Door Hinge-Lower		
Rh	(1)	**XKC34**
Lh	(1)	**XKC33**
Adjustment Shims; *Use as required.*		
0.60mm Thickness	(a/r)	**DZB4155**
0.775mm Thickness	(a/r)	**DZB4156**
0.975mm Thickness	(a/r)	**DZB4157**
Plate/Washer *(Adjusting shim);*		
2.92mm Thickness	(2)	**ZKC2**
0.975mm Thickness	(a/r)	**ZKC3302**
Nut *(Hinge to door)*	(12)	**GHF213**
Washer-Flat *(Hinge to door)*	(12)	**GHF312**
Washer-Spring *(Hinge to door)*	(12)	**GHF382**
Dash Scuttle Panel	(1)	**XKC25**

Windscreen Panels & Roof Sections

See also; ***Windscreen/Finishers & Rear Glass.***

WINDSCREEN PANELS - CONVERTIBLE

Windscreen Surround Panel	(1)	**YKC4471**
Header Panel	(1)	**WKC3503**
Cantrail/Filler Assembly		
Rh	(1)	**WKC3924**
Lh	(1)	**WKC3923**

WINDSCREEN PANELS & ROOF SECTIONS - COUPE

Windscreen Surround Panel	(1)	**YKC4470**
Cantrail/Filler Assembly		
Rh	(1)	**XKC159**
Lh	(1)	**XKC158**
Roof Channel		
Rh	(1)	**WKC35**
Lh	(1)	**WKC34**
Reinforcement-Mirror	(1)	**ZKC2236**
Roof Section;		
Non Sun Roof type	(1)	**WKC81**
Sun Roof type	(1)	**WKC199**
Header Rail *(Trim retaining)*	(1)	**XKC63**
Pop Rivet	(9)	**713531**
Closing Panel-Rear Screen	(1)	**WKC99**

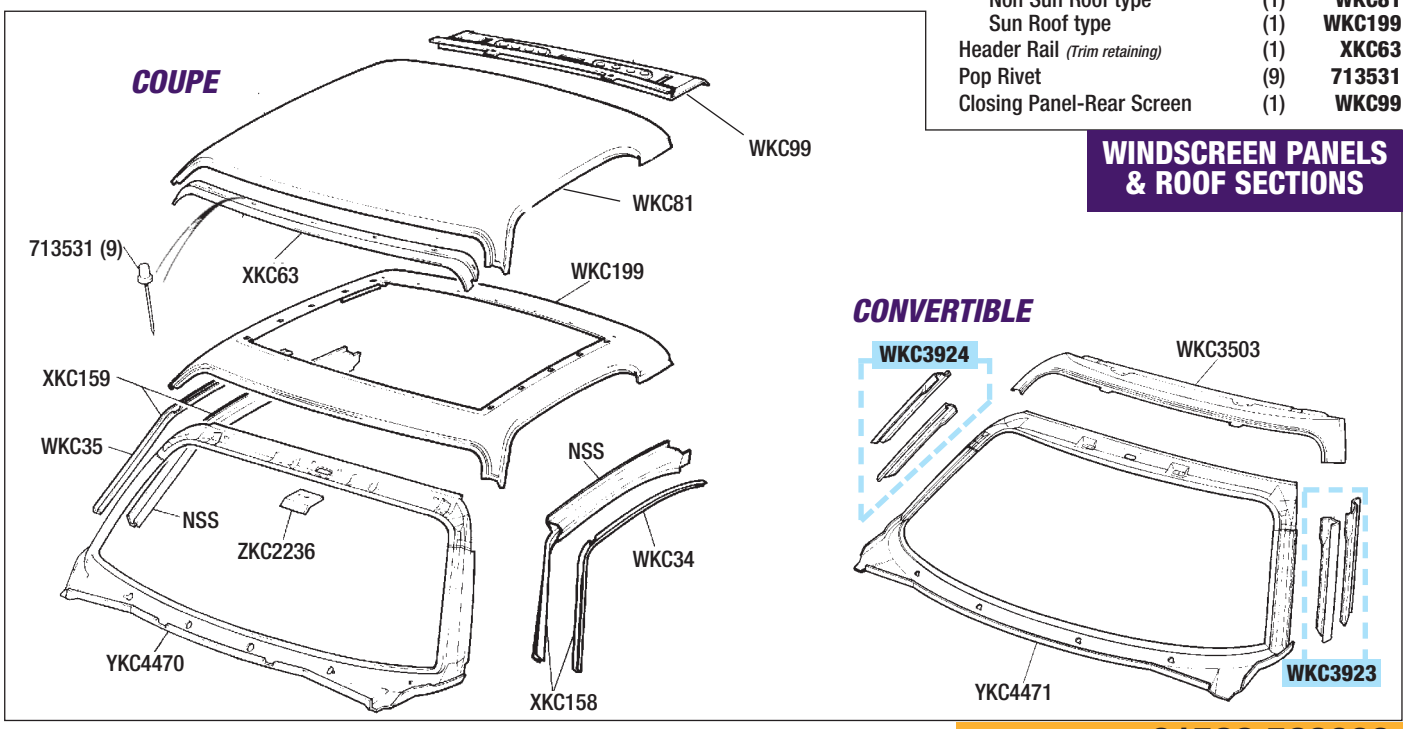

TO ORDER: 01522 568000
www.rimmerbros.co.uk

CONVERTIBLE

Doors & Hinges

Convertible
See also; ***Door Lock Mechanism, Door Glass & Controls, Body Repair Panels.***

Description	Qty Req.	Part No.
Door Shell (New); *Suitable for all vehicles with either Round or Square locking knob.*		
Rh	(1)	**WKC5283**
Lh	(1)	**WKC5282**
Door Shell (Reconditioned);		
Vehicles to VIN 402000 *(Round locking knob).*		
Rh	(1)	**WKC3511R**
Lh	(1)	**WKC3512R**
Vehicles from VIN 402001 *(Square locking knob).*		
Rh	(1)	**WKC5283R**
Lh	(1)	**WKC5282R**
Door Skin *(Original specification).*		
Rh	(1)	**YKC75**
Lh	(1)	**YKC74**
Sound Deadening Pad *Self adhesive (21" x 8"). Fits on inside of door skin.*	(2)	**RB7145**
Door Bottom Repair Panel *Item 14 in Body Repair Panels (page 82).*		
Rh	(1)	**RB7147**
Lh	(1)	**RB7148**
Weatherstrip-Outer		
Rh	(1)	**YKC103**
Lh	(1)	**YKC102**
Retaining Clip *(7 per door) Locates outer weatherstrip to door.*	(14)	**ZKC1942**
Door Stop/Buffer		
Rh	(1)	**YKC4494**
Lh	(1)	**YKC4495**
Door Corner Protector *See also EXTERIOR TRIM & BADGES.*		
Rh	(1)	**ZKC2583**
Lh	(1)	**ZKC2582**
Door Restraint	(2)	**YKC3290**
Screw *(For YKC3290)*	(8)	**SF106201**
Hook-Door Restraint	(2)	**ZKC3464**

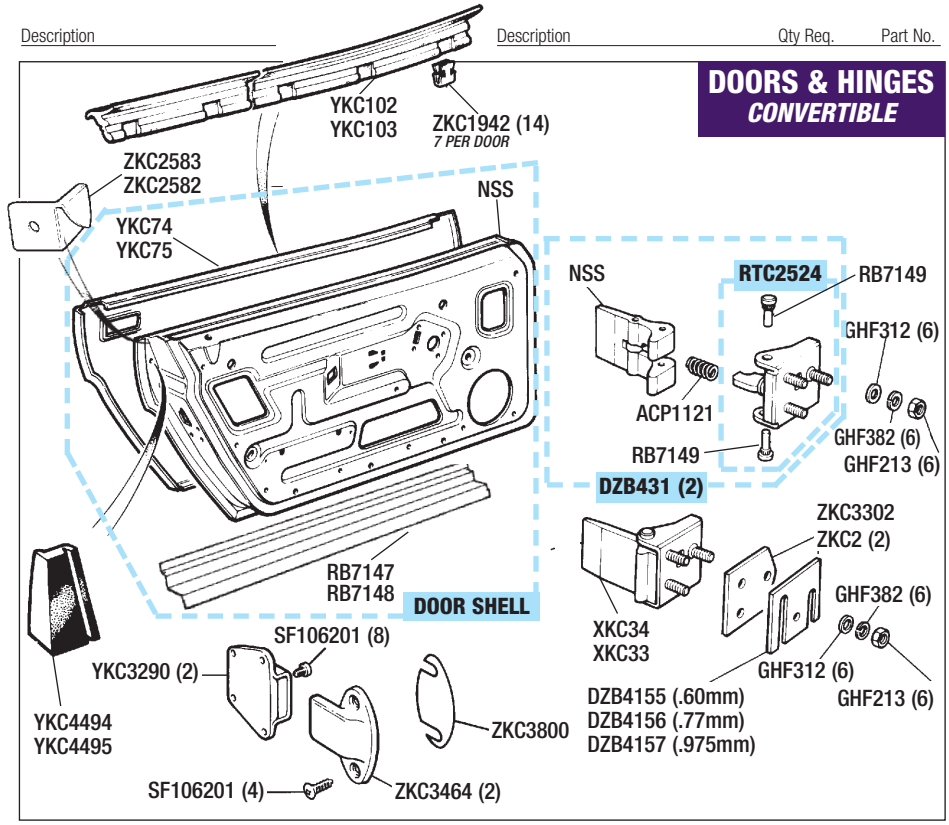

Description	Qty Req.	Part No.
Screw *(For ZKC3464)*	(4)	**SF106201**
Gasket *(As required)*	(a/r)	**ZKC3800**
Door Hinge Assembly-Upper	(2)	**DZB431**
Upper Door Hinge Repair Kit *Includes pins & plate/studs.*	(2)	**RTC2524**
Upper Door Hinge Pin only *2 pins required per hinge.*	(4)	**RB7149**
Spring-Upper Hinge *Not included in repair kit.*	(2)	**ACP1121**
Door Hinge-Lower		
Rh	(1)	**XKC34**
Lh	(1)	**XKC33**
Adjustment Shims; *Use as required.*		
0.60mm Thickness	(a/r)	**DZB4155**
0.775mm Thickness	(a/r)	**DZB4156**
0.975mm Thickness	(a/r)	**DZB4157**
Plate/Washer *(Adjusting shim);*		
2.92mm Thickness	(2)	**ZKC2**
0.975mm Thickness *(As required)*	(a/r)	**ZKC3302**
Nut *(Hinge to door)*	(12)	**GHF213**
Washer-Flat *(Hinge to door)*	(12)	**GHF312**
Washer-Spring *(Hinge to door)*	(12)	**GHF382**

COUPE

Doors & Hinges

Coupe
See also; ***Door Lock Mechanism, Door Glass & Controls, Body Repair Panels.***

Description	Qty Req.	Part No.
Door Shell (New) *Suitable for all vehicles with either Round or Square locking knob.*		
Rh	(1)	**WKC5287**
Lh	(1)	**WKC5286**
Door Shell (Reconditioned);		
Vehicles to VIN 402000* *Round locking knob.*		
Rh	(1)	**WKC3660R**
Lh	(1)	**WKC3659R**
Vehicles from VIN 402001 *Square locking knob.*		
Rh	(1)	**WKC5287R**
Lh	(1)	**WKC5286R**
Door Skin *(Original specification);*		
Rh	(1)	**YKC75**
Lh	(1)	**YKC74**
Sound Deadening Pad *Self adhesive (21" x 8"). Fits on inside of door skin.*	(2)	**RB7145**
Door Bottom Repair Panel *Item 14 in Body Repair Panels (page 82).*		
Rh	(1)	**RB7147**
Lh	(1)	**RB7148**
Weatherstrip-Outer		
Rh	(1)	**YKC103**
Lh	(1)	**YKC102**
Retaining Clip (7 per door) *Locates outer weatherstrip to door.*	(14)	**ZKC1942**
Door Stop/Buffer;		
Early Vehicles *(All ACG chassis numbers)*		
Rh & Lh	(2)	**ZKC435**
Late Vehicles *(TCG & VIN chassis numbers)*		
Rh	(1)	**YKC4494**
Lh	(1)	**YKC4495**
Door Corner Protector *See also EXTERIOR TRIM & BADGES.*		
Rh	(1)	**ZKC2583**
Lh	(1)	**ZKC2582**
Door Hinge Assembly-Upper	(2)	**DZB431**
Upper Door Hinge Repair Kit *Includes pins & plate/studs.*	(2)	**RTC2524**
Upper Door Hinge Pin only *2 pins required per hinge.*	(4)	**RB7149**
Spring-Upper Hinge *Not included in repair kit.*	(2)	**ACP1121**
Door Hinge-Lower		
Rh	(1)	**XKC34**
Lh	(1)	**XKC33**
Adjustment Shims; *(Use as required)*		
0.60mm Thickness	(a/r)	**DZB4155**
0.775mm Thickness	(a/r)	**DZB4156**
0.975mm Thickness	(a/r)	**DZB4157**
Plate/Washer *(Adjusting shim);*		
2.92mm Thickness	(2)	**ZKC2**
0.975mm Thickness *(As required)*	(a/r)	**ZKC3302**
Nut *(Hinge to door)*	(12)	**GHF213**
Washer-Flat *(Hinge to door)*	(12)	**GHF312**
Washer-Spring *(Hinge to door)*	(12)	**GHF382**

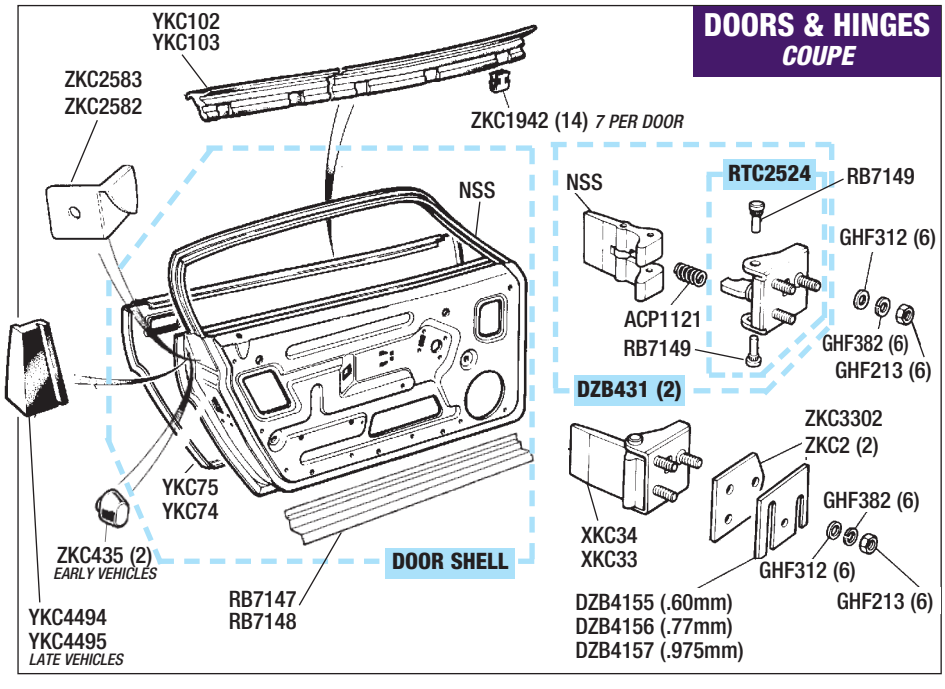

CONVERTIBLE
Door Glass & Controls
Convertible

Description	Qty Req.	Part No.
Quarterlight Assembly		
Rh	(1)	**WKC4759**
Lh	(1)	**WKC4758**
Glass-Quarterlight		
Rh	(1)	**XKC3673**
Lh	(1)	**XKC3672**
Rubber Seal		
Rh	(1)	**XKC2820**
Lh	(1)	**XKC2819**
Frame-Quarterlight		
Rh	(1)	**XKC2875**
Lh	(1)	**XKC2876**
Top Rubber-Quarterlight		
Rh	(1)	**YKC3283**
Lh	(1)	**YKC3282**
Screw-Self Tapping *Retains rubbers YKC3283/3282.*	(2)	**AB604021**
Rivet *(Quarterlight frame)*	(8)	**713531**
Nut	(2)	**NJ106061**
Washer-Plain	(2)	**WD108051**
Washer-Plain	(2)	**GHF301**
Setscrew *(Frame retaining)*	(4)	**SH106121**
Washer-Spring	(4)	**WL106001**
Washer-Plain	(4)	**WC106041**
Rubber/Felt- 'Glass Run' *(Front)* *Front channel/guide for drop glass.*	(2)	**XKC3010**
Drop Glass		
Rh	(1)	**XKC3676**
Lh	(1)	**XKC3677**
Lift Channel-Drop Glass		
Rh	(1)	**YKC503**
Lh	(1)	**YKC502**
Seating Rubber *(Drop Glass)* *Fits inside lift channels YKC503/YKC502.*	(2)	**617166**
Rubber/Felt- 'Glass Run' *(Rear)* *Rear channel/guide for drop glass.*	(2)	**XKC3011**
Guide-Drop Glass* *(Door top rear);*		
Rh	(1)	**XKC2972**
Lh	(1)	**XKC2971**
Rivet (Guide)* **See also EXTERIOR & TRIM.*	(2)	**RB6407**
Channel- 'Glass Guide' *(Rear);*		
Rh	(1)	**XKC124**
Lh	(1)	**XKC123**
Setscrew *(Glass guide to door)*	(4)	**SH106121**
Washer-Spring *(For SH106121)*	(4)	**WL106001**
Washer-Plain *(For SH106121)*	(4)	**GHF300**
'Stop' Bracket *(Drop Glass); Located inside door shell.*		
Rh	(1)	**YKC3620**
Lh	(1)	**YKC3621**
Setscrew	(4)	**SH105121**
Washer-Spring	(4)	**WL105001**
Washer-Plain	(4)	**WA105001**
Window Regulator *(Drop glass);*		
Rh	(1)	**XKC326**
Lh	(1)	**XKC325**
Setscrew *Window regulator to door.*	(8)	**SH604041**
Washer-Spring *(For SH604101)*	(8)	**GHF331**
Washer-Flat *(For SH604101)*	(8)	**GHF300**
Spacer	(2)	**611733**
Escutcheon	(2)	**DZA925**
Window Winder Handle	(2)	**CZA7109**
Screw-Handle Retaining	(2)	**ZKC3317**

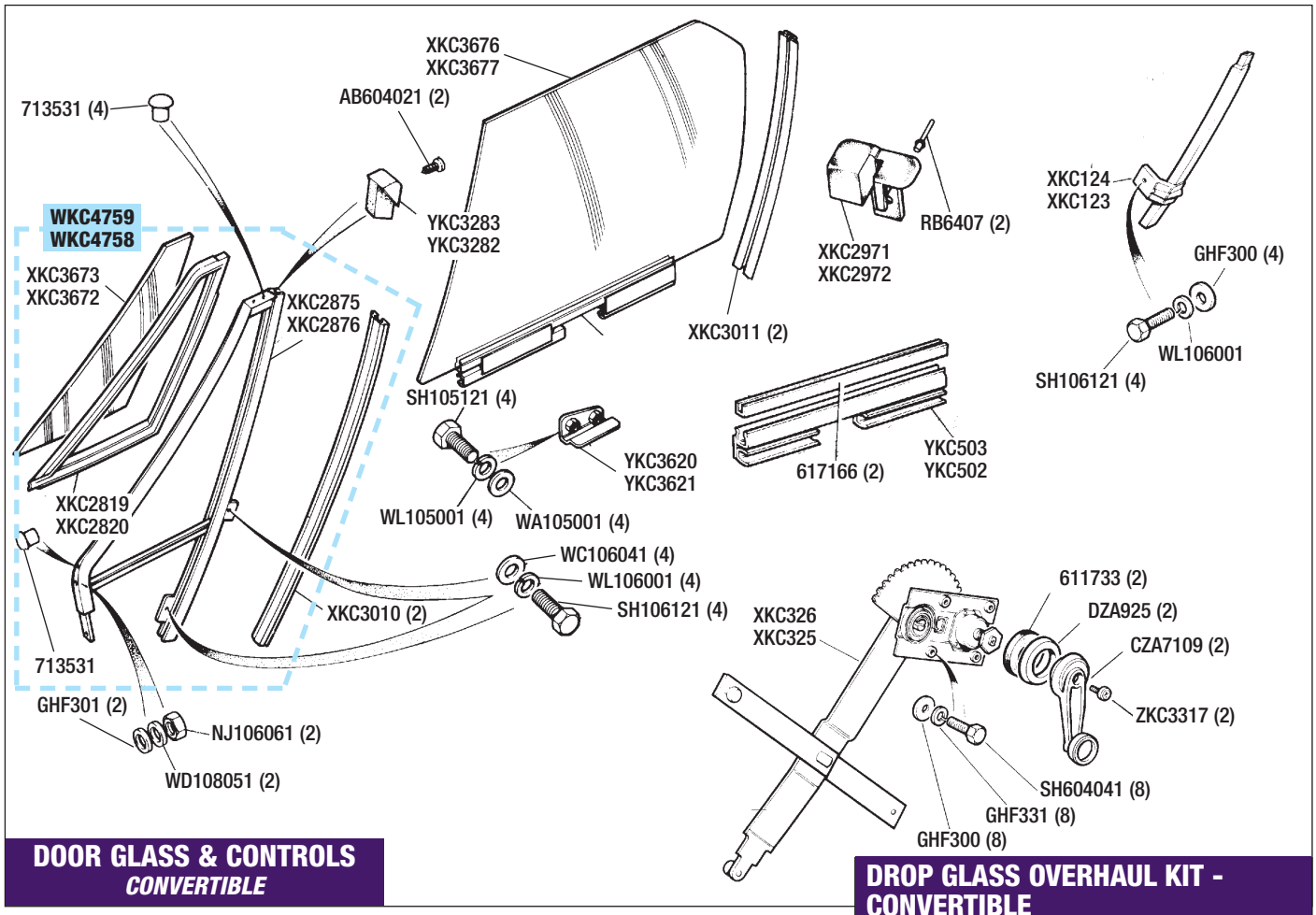

DOOR GLASS & CONTROLS
CONVERTIBLE

DROP GLASS OVERHAUL KIT - CONVERTIBLE

Do your convertible door internals need an overhaul? This kit includes:- 2 glass guides (rear of door) and retaining rivets, 2 quarterlight top rubbers (stops) and retaining screws, a set of flock channel felts, 2 weatherstrip seals (drop glass to door) inc. clips and a pair of winder mechanisms.

Drop Glass Overhaul Kit - DHC	(1)	**RB2019**

TO ORDER: 01522 568000
www.rimmerbros.co.uk

COUPE

Door Glass & Controls

Coupe

Description	Qty Req.	Part No.
Quarterlight Glass;		
'Sundym' Glass		
Rh	(1)	**XKC3682**
Lh	(1)	**XKC3681**
'Clear' Glass		
Rh	(1)	**XKC285**
Lh	(1)	**XKC284**
Rubber Seal		
Rh	(1)	**XKC133**
Lh	(1)	**XKC132**
Channel- 'Glass Guide' *(Front);*		
Rh	(1)	**WKC460**
Lh	(1)	**WKC450**
Setscrew *(Glass guide to door)*	(8)	**SH106121**
Washer-Spring *(For SH106121)*	(8)	**WL106001**
Washer-Plain *(For SH106121)*	(8)	**GHF300**
Rubber/Felt- 'Glass Run' *Fits in upper door frame surround for drop glass.*	(2)	**YKC90**
Drop Glass;		
'Sundym' Glass		
Rh	(1)	**XKC3695**
Lh	(1)	**XKC3694**
'Clear' Glass		
Rh	(1)	**YKC241**
Lh	(1)	**YKC240**
Lift Channel-Drop Glass		
Rh	(1)	**YKC503**
Lh	(1)	**YKC502**
Seating Rubber *(Drop Glass)* *Fits inside lift channels YKC503/YKC502.*	(2)	**617166**
Channel- 'Glass Guide' *(Rear);*		
Rh	(1)	**XKC124**
Lh	(1)	**XKC123**
Setscrew *(Glass guide to door)*	(4)	**SH106121**
Washer-Spring *(For SH106121)*	(4)	**WL106001**
Washer-Plain *(For SH106121)*	(4)	**GHF300**
Window Regulator *(Drop glass);*		
Rh	(1)	**XKC326**
Lh	(1)	**XKC325**
Setscrew *Window regulator to door.*	(8)	**SH604041**
Washer-Spring *(For SH604101)*	(8)	**GHF331**
Washer-Flat *(For SH604101)*	(8)	**GHF300**
Spacer	(2)	**611733**
Escutcheon	(2)	**DZA925**
Window Winder Handle	(2)	**CZA7109**
Screw-Handle Retaining	(2)	**ZKC3317**

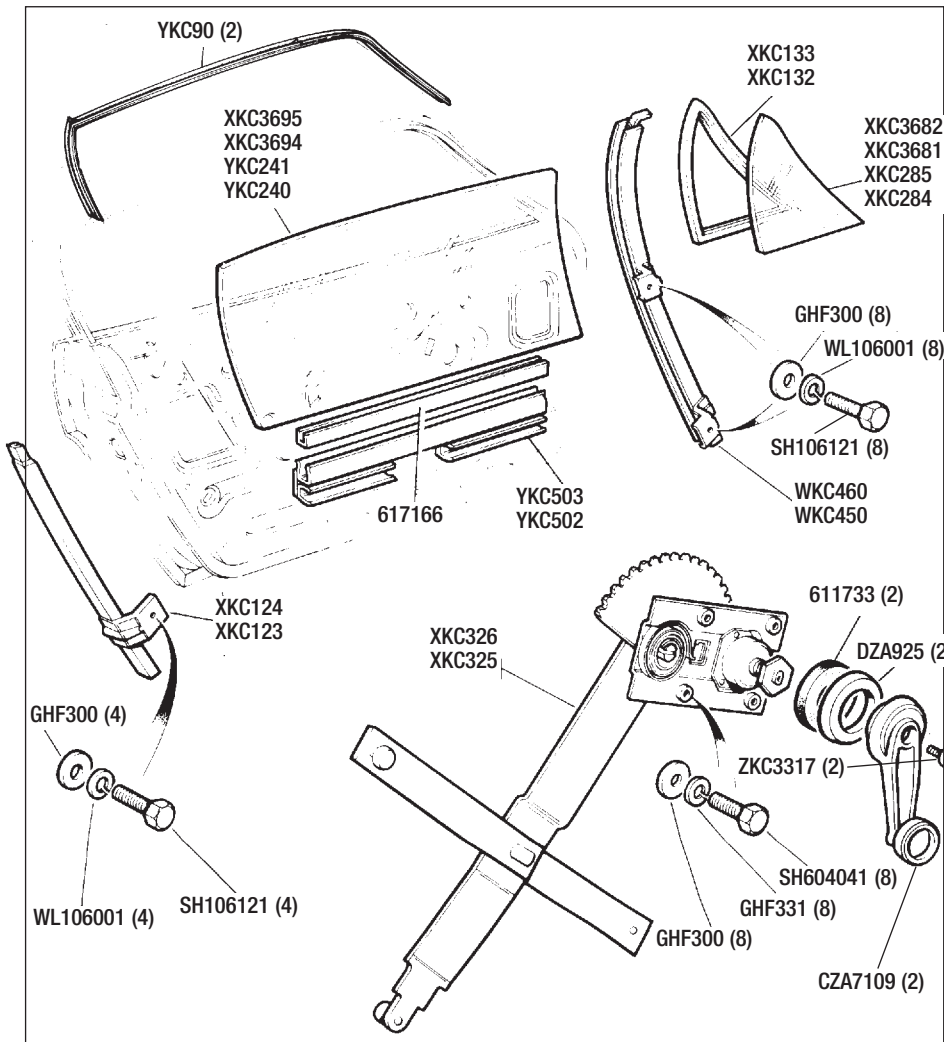

DOOR GLASS & CONTROLS
COUPE

DOOR GLASS & SEAL KIT - COUPE

This kit includes a new pair of tinted door drop and quarter-light glasses, 2 weatherstrip seals (drop glass to door) & clips, 2 flock channel felts, drop glass seating rubbers and a pair of winder mechanisms.

Drop Glass & Seal Kit - FHC (1) **RB2018**

Door Lock Mechanism

ROUND INTERIOR LOCKING KNOB
Convertible & Coupe *(Vehicles to VIN 402000).*

Description	Qty Req.	Part No.
Door Handle Assembly *(Exterior)*		
Rh	(1)	**XKC796**
Lh	(1)	**XKC795**
Lock Barrel (Pair) *(Complete with Keys)* *Keys not illustrated.*	(1)	**576469**
Stop Grommet (Rubber) *Behind outer door handle flap (not shown).*	(2)	**AAU3252**
Gasket *(Exterior door handle)*	(2)	**CZK3754**
Bracket-Exterior Door Handle	(2)	**DZA3450**
Washer-Spring	(4)	**WL205**
Nut	(4)	**HN2005**
Handle/Link Assembly *(Interior)*	(2)	**XKC770**
Screw-Self Tapping	(2)	**YZ3404**
'Spire' Nut (Plastic) *2 'Spire' nuts are used as spacers.*	(4)	**GHF1021**
Escutcheon/Finisher *(Locates in door trim panel).*		
Rh	(1)	**ZKC927**
Lh	(1)	**ZKC926**
Screw-Self Tapping	(2)	**AD608054**
Lock Assembly *Positioned on rear of door (inside).*		
Rh	(1)	**XKC323**
Lh	(1)	**XKC322**
Link Control Rods *(Door handle & lock);*		
Lock/Unlock *(External operation)*		
Rh	(1)	**ZKC400**
Lh	(1)	**ZKC399**
Latch Release *(External operation)*		
Rh	(1)	**ZKC398**
Lh	(1)	**ZKC397**
Lock/Unlock *(Internal operation)*		
Rh	(1)	**ZKC418**
Lh	(1)	**ZKC417**
Locking Knob *(Internal operation)* *Operates ZKC418/417.*	(2)	**615888**
Eyelet* *(Internal locking knob)*	(2)	**626697**
Ring* *(Internal locking knob)* **Located on door trim panel.*	(2)	**626698**
Clip/Retainer-Linkage *Link control rods.*	(12)	**DZA943**

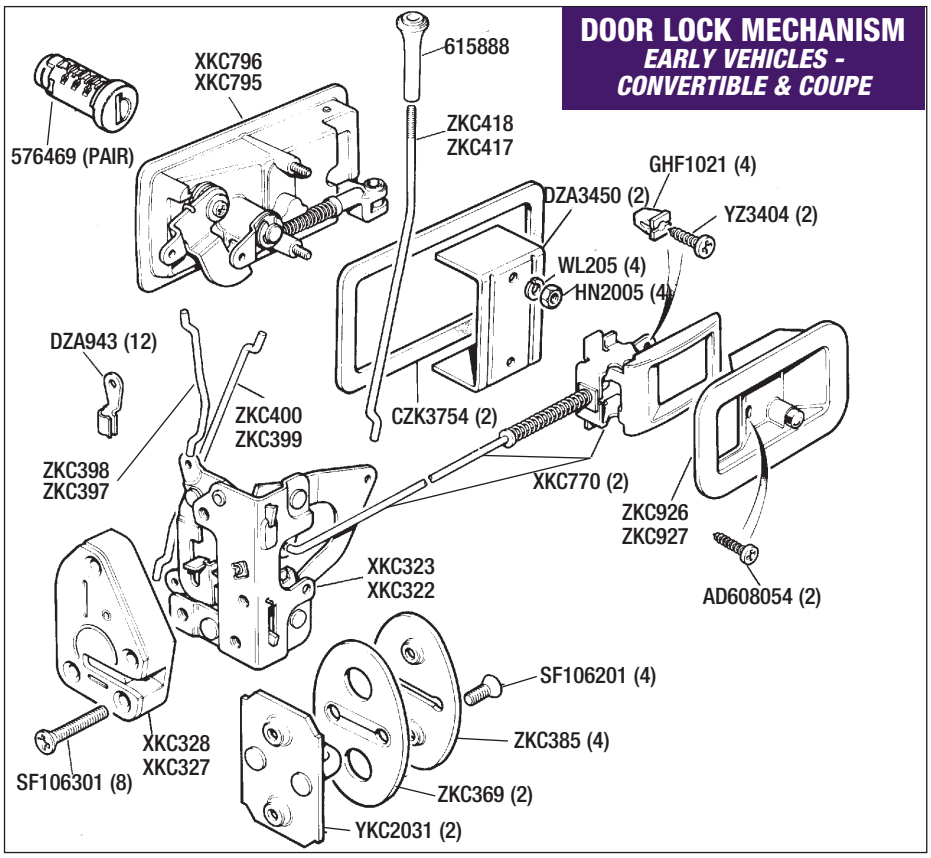

Description	Qty Req.	Part No.
Latch Assembly *Positioned on rear of door (outside).*		
Rh	(1)	**XKC328**
Lh	(1)	**XKC327**
Screw-Special	(8)	**SF106301**
Striker Plate*	(2)	**YKC2031**
Gasket* (Striker Plate)	(2)	**ZKC369**
Cover* (Striker Plate) **Positioned on 'B' post.*	(2)	**ZKC385**
Screw-Special	(4)	**SF106201**

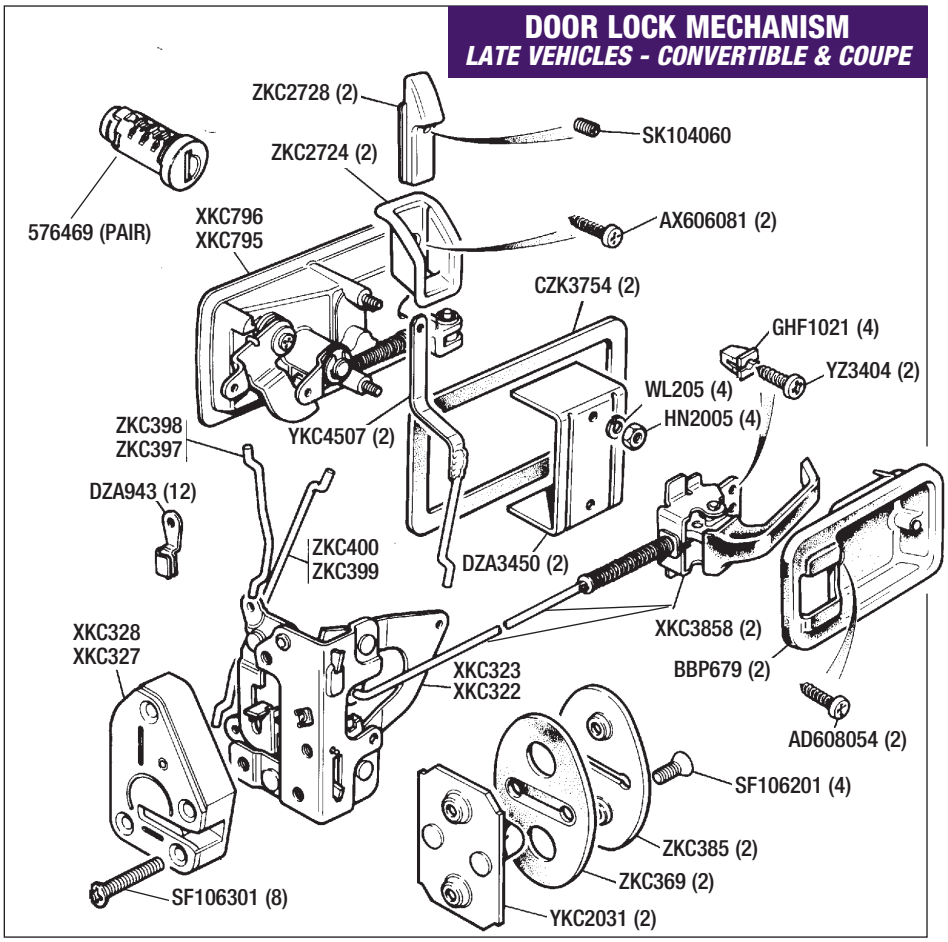

SQUARE INTERIOR LOCKING KNOB
Convertible & Coupe *(Vehicles from VIN 402001).*

Description	Qty Req.	Part No.
Door Handle Assembly *(Exterior);*		
Rh	(1)	**XKC796**
Lh	(1)	**XKC795**
Lock Barrel (Pair) *(Complete with Keys)* *Keys not illustrated.*	(1)	**576469**
Gasket *(Exterior door handle)*	(2)	**CZK3754**
Stop Grommet (Rubber) *Behind outer door handle flap (not shown).*	(2)	**AAU3252**
Bracket-Exterior Door Handle	(2)	**DZA3450**
Washer-Spring	(4)	**WL205**
Nut	(4)	**HN2005**
Handle/Link Assembly *(Interior)*	(2)	**XKC3858**
Screw-Self Tapping	(2)	**YZ3404**
'Spire' Nut (Plastic) *2 'Spire' nuts are used as spacers.*	(4)	**GHF1021**
Escutcheon/Finisher (Rh & Lh) *Locates in door trim panel.*	(2)	**BBP679**
Screw-Self Tapping	(2)	**AD608054**
Lock Assembly *Positioned on rear of door (inside).*		
Rh	(1)	**XKC323**
Lh	(1)	**XKC322**
Link Control Rods *(Door handle & lock);*		
Lock/Unlock *(External operation);*		
Rh	(1)	**ZKC400**
Lh	(1)	**ZKC399**
Latch Release *(External operation);*		
Rh	(1)	**ZKC398**
Lh	(1)	**ZKC397**
Lock/Unlock *(Internal operation)*	(2)	**YKC4507**
Locking Knob *(Internal operation)* *Operates YKC4507.*	(2)	**ZKC2728**
'Grub' Screw *(For ZKC2728)*	(2)	**SK104060**
Knob Escutcheon *(For ZKC2728)* *Locates in door trim panel.*	(2)	**ZKC2724**
Screw-Self Tapping *(For ZKC2724)*	(2)	**AX606081**
Clip/Retainer-Linkage *Link control rods.*	(12)	**DZA943**
Latch Assembly *Positioned on rear of door (outside).*		
Rh	(1)	**XKC328**
Lh	(1)	**XKC327**
Screw-Special	(8)	**SF106301**
Striker Plate*	(2)	**YKC2031**
Gasket* (Striker Plate)	(2)	**ZKC369**
Cover* (Striker Plate) **Positioned on 'B' post.*	(2)	**ZKC385**
Screw-Special	(4)	**SF106201**

TO ORDER: 01522 568000
www.rimmerbros.co.uk

Description | Qty Req. | Part No.

REAR WINGS & ARCHES
CONVERTIBLE

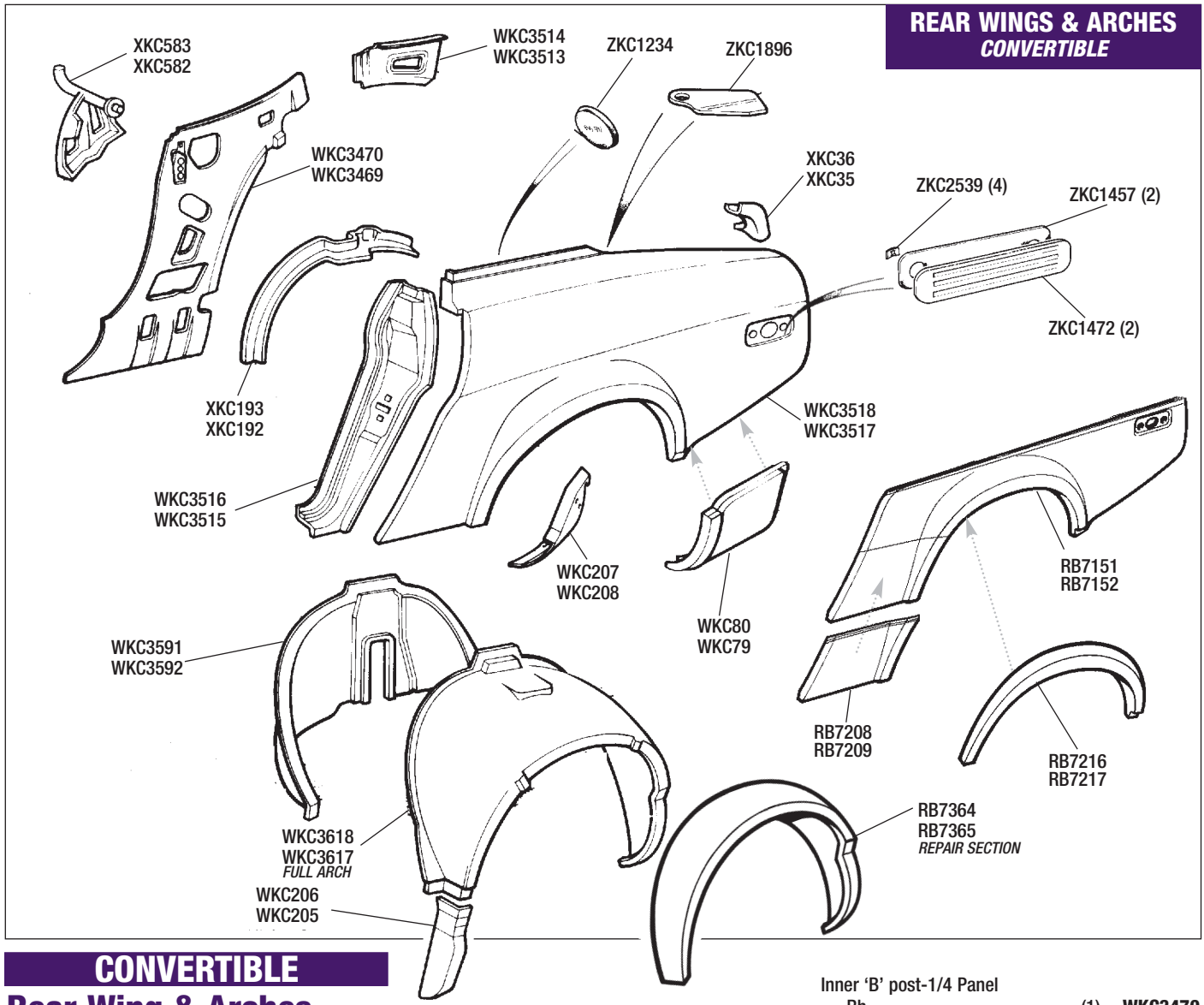

CONVERTIBLE

Rear Wing & Arches

Convertible

Rear Wing
- Rh (1) **WKC3518**
- Lh (1) **WKC3517**

Rear Wing 'Wheel Arch'- Repair Panel *(Steel);*
Item 20 in Body Repair Panels (page 82).
- Right Hand (1) **RB7216**
- Left Hand (1) **RB7217**

Rear Wing 'Front Lower'- Repair Panel *(Steel);*
Item 21 in Body Repair Panels (page 82).
- Right Hand (1) **RB7208**
- Left Hand (1) **RB7209**

Rear Wing 'Lower Half'- Repair Panel *(Fibreglass);*
Item 18 in Body Repair Panels (page 82).
- Right Hand (1) **RB7151**
- Left Hand (1) **RB7152**

Rear Lower Sill Panel
- Outer
  - Rh (1) **WKC80**
  - Lh (1) **WKC79**
- Inner
  - Rh (1) **WKC208**
  - Lh (1) **WKC207**

'B' Post Panel Section
- Rh (1) **WKC3516**
- Lh (1) **WKC3515**

Rear 'Inner Wheel Arch' Panels;
- Outer Full Arch Panel
  - Rh (1) **WKC3618**
  - Lh (1) **WKC3617**
- Outer Arch Repair Section;
  Item 17 in Body Repair Panels (page 82).
  - Rh (1) **RB7364**
  - Lh (1) **RB7365**
- Splash Plate/Filler Panel;
  Outer arch to sill panel.
  - Rh (1) **WKC206**
  - Lh (1) **WKC205**
- Inner Arch Section;
  - Rh (1) **WKC3592**
  - Lh (1) **WKC3591**

Upper Angle/Support Panel;
Inner wheel arch panels.
- Rh (1) **XKC193**
- Lh (1) **XKC192**

Inner 'B' post-1/4 Panel
- Rh (1) **WKC3470**
- Lh (1) **WKC3469**

Closing/Filler Panel
- Rh (1) **WKC3514**
- Lh (1) **WKC3513**

Bracket-Seat Belt
- Rh (1) **XKC583**
- Lh (1) **XKC582**

Gutter Channel Panel
- Rh (1) **XKC36**
- Lh (1) **XKC35**

Mounting Bracket *(Radio Aerial)* (1) **YKC1896**

Blanking Grommet *(Radio Aerial)* (1) **ZKC1234**

Blanking Plate (2) **ZKC1472**
UK specification vehicles.
Required if cruise lights not fitted.
Note: The original blanking plate ZKC1454 is no longer available. As an alternative you can fit the front blanking plate ZKC1472, with the corresponding fittings.

Gasket *(Blanking plate to wing)* (2) **ZKC1457**

Fastening Clip (4) **ZKC2539**
Blanking plate to wing.

Description	Qty Req.	Part No.	Description	Qty Req.	Part No.	Description	Qty Req.	Part No.

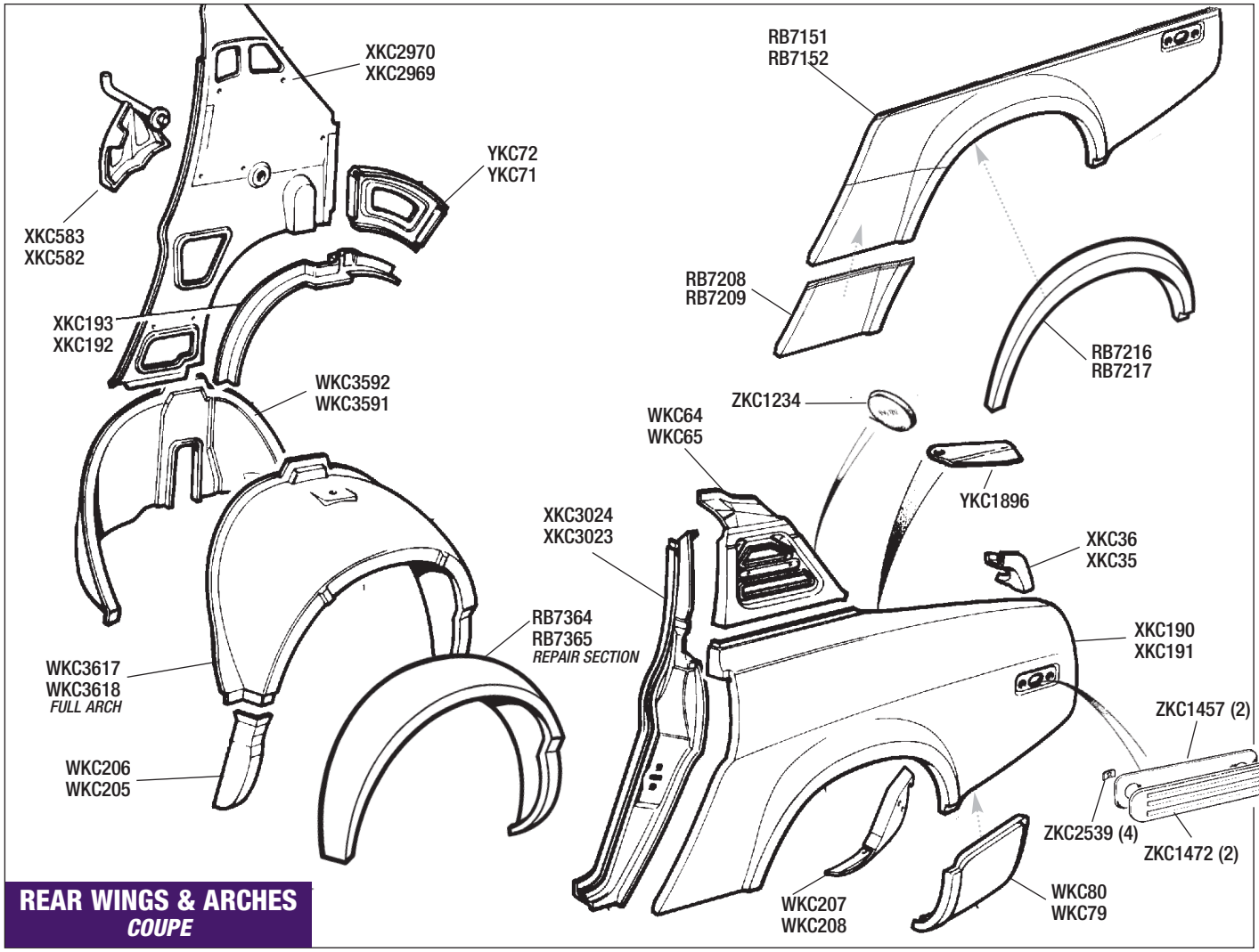

REAR WINGS & ARCHES
COUPE

COUPE

Rear Wing & Arches

Coupe

Rear Wing		
Rh	(1)	**XKC191**
Lh	(1)	**XKC190**
Rear Wing 'Wheel Arch'- Repair Panel *(Steel);* *Item 20 in Body Repair Panels (page 82).*		
Right Hand	(1)	**RB7216**
Left Hand	(1)	**RB7217**
Rear Wing 'Front Lower'- Repair Panel *(Steel);* *Item 21 in Body Repair Panels (page 82).*		
Right Hand	(1)	**RB7208**
Left Hand	(1)	**RB7209**
Rear Wing 'Lower Half'- Repair Panel *(Fibreglass);* *Item 18 in Body Repair Panels (page 82).*		
Right Hand	(1)	**RB7151**
Left Hand	(1)	**RB7152**
Rear Lower Sill Panel;		
Outer		
Rh	(1)	**WKC80**
Lh	(1)	**WKC79**
Inner		
Rh	(1)	**WKC208**
Lh	(1)	**WKC207**
Rear Quarter Panel;		
Rh	(1)	**WKC65**
Lh	(1)	**WKC64**
'B' Post Panel Section;		
Rh	(1)	**XKC3024**
Lh	(1)	**XKC3023**
Rear 'Inner Wheel Arch' Panels;		
Outer Full Arch Panel;		
Rh	(1)	**WKC3618**
Lh	(1)	**WKC3617**
Outer Arch Repair Section; *Item 17 in Body Repair Panels (page 82).*		
Rh	(1)	**RB7364**
Lh	(1)	**RB7365**
Splash Plate/Filler Panel; *Outer arch to sill panel.*		
Rh	(1)	**WKC206**
Lh	(1)	**WKC205**
Inner Arch Section;		
Rh	(1)	**WKC3592**
Lh	(1)	**WKC3591**
Upper Angle/Support Panel; *Inner wheel arch panels.*		
Rh	(1)	**XKC193**
Lh	(1)	**XKC192**
Inner 'B' post-1/4 Panel;		
Rh	(1)	**XKC2970**
Lh	(1)	**XKC2969**
Closing/Filler Panel;		
Rh	(1)	**YKC72**
Lh	(1)	**YKC71**
Bracket-Seat Belt;		
Rh	(1)	**XKC583**
Lh	(1)	**XKC582**
Gutter Channel Panel;		
Rh	(1)	**XKC36**
Lh	(1)	**XKC35**
Mounting Bracket *(Radio Aerial)*	(1)	**YKC1896**
Blanking Grommet *(Radio Aerial)*	(1)	**ZKC1234**
Blanking Plate *UK specification vehicles. Required if cruise lights not fitted. Note: The original blanking plate ZKC1454 is no longer available. As an alternative you can fit the Front blanking plate ZKC1472, with the corresponding fittings.*	(2)	**ZKC1472**
Gasket *(Blanking plate to wing)*	(2)	**ZKC1457**
Fastening Clip *Blanking plate to wing.*	(4)	**ZKC2539**

TO ORDER: 01522 568000
www.rimmerbros.co.uk

Description	Qty Req.	Part No.

Sills & Floor Panels

See also; Body Repair Panels.

Full Outer Sill *(Original specification).*		
Rh	(1)	**XKC113**
Lh	(1)	**XKC112**
'Quick-fit' Outer Sill; *Item 22 in Body Repair Panels (page 82).*		
Rh	(1)	**RB7204**
Lh	(1)	**RB7205**
Inner Sill		
Rh	(1)	**XKC167**
Lh	(1)	**XKC165**
'Jack' Mounting Bracket	(2)	**YKC31**
Floor Repair Panels; *Items 10,11,12 & 13 in Body Repair Panels (page 82). See also items24, 25 & 26 (rear floor & trailing arm mounting repair panels) in 'Body Repair Panels' (page 82).*		
Front		
Rh	(1)	**RB7194**
Lh	(1)	**RB7195**
Rear		
Rh	(1)	**RB7172**
Lh	(1)	**RB7173**
Floor Pan Plug (Metal) *Available as OE or pattern.*	(1)	**RB7083**

Rear Floor/Trailing Arm Mountings - *Repair Panels*

*Please see: **'Body Repair Panels'** on page 82.*

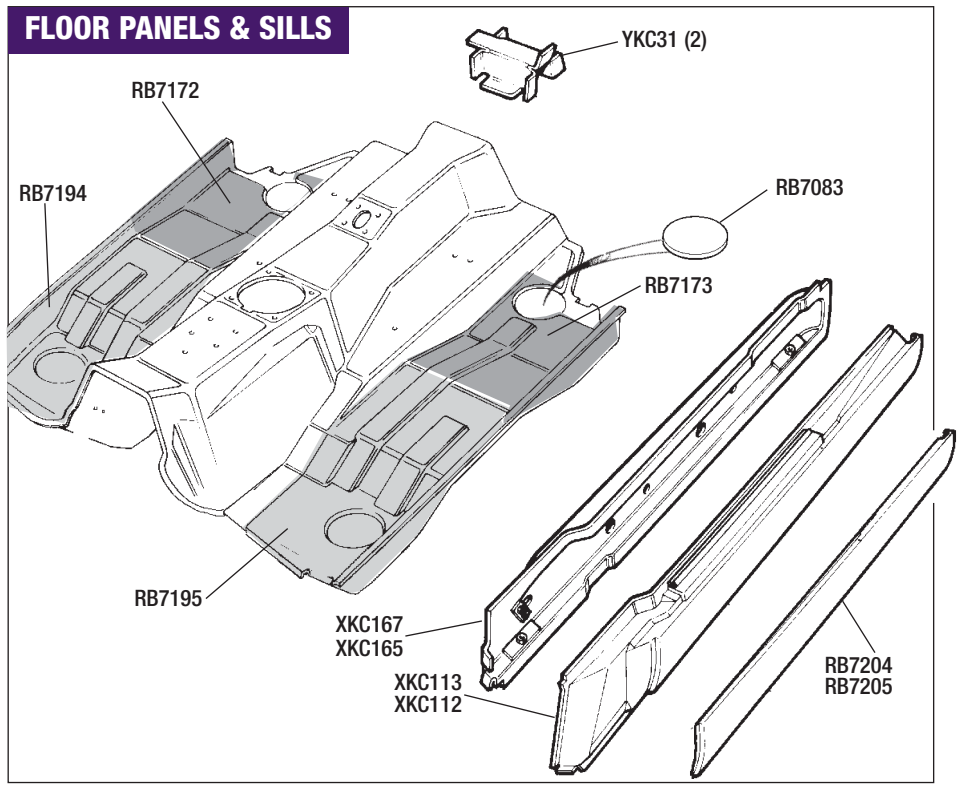

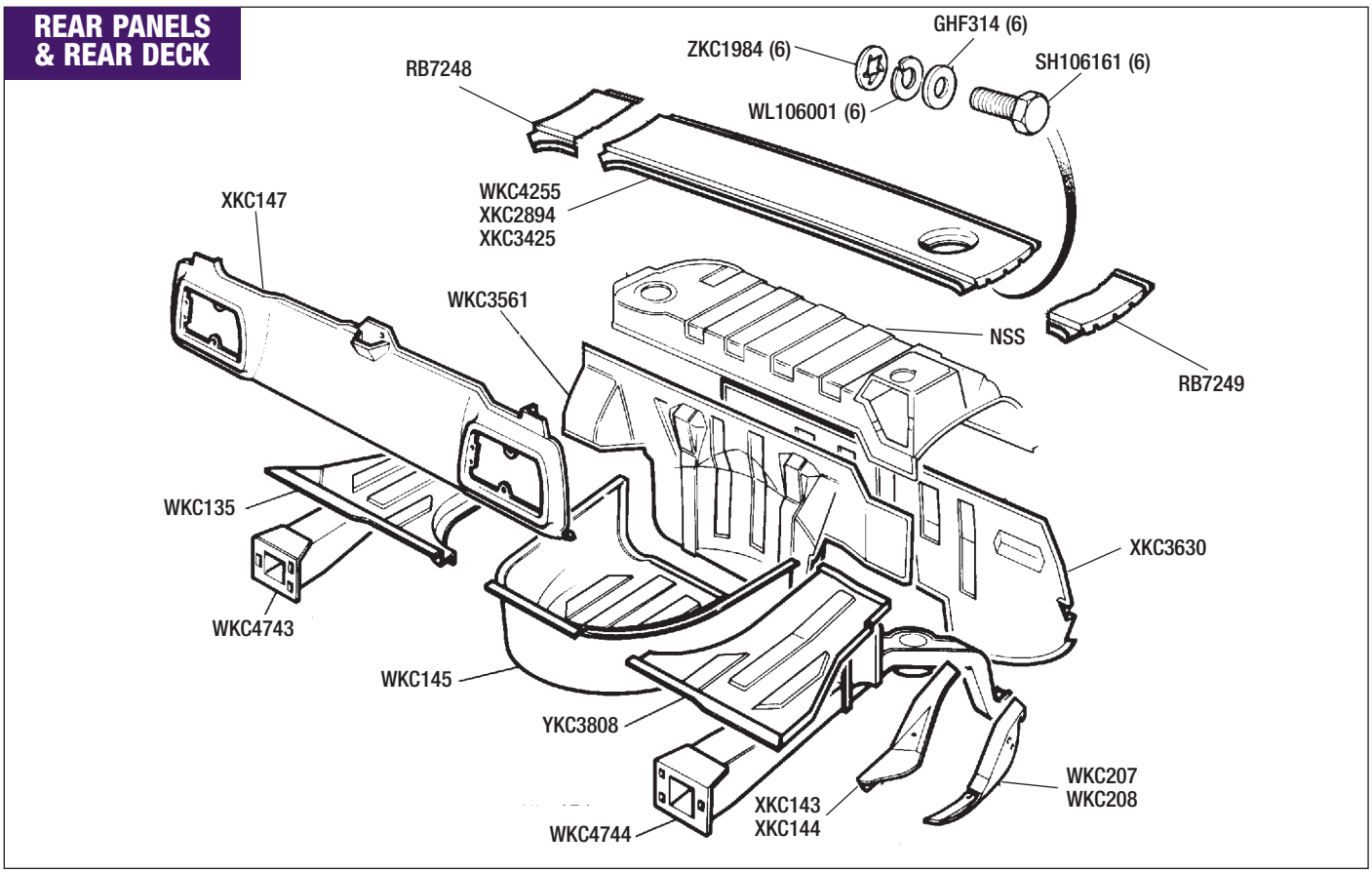

Rear Panels & Rear Deck

Convertible & Coupe

Rear Deck;		
Convertible	(1)	**WKC4255**
Coupe *Large fuel filler recess (to approx' 1978).*	(1)	**XKC2894**
Coupe *Small fuel filler recess (from approx' 1978).*	(1)	**XKC3425**
Rear Deck Repair Panel *(Coupe Only); Item 16 in Body Repair Panels (page 82).*		
Right Hand	(1)	**RB7248**
Left Hand	(1)	**RB7249**
Setscrew	(6)	**SH106161**
Washer-Flat	(6)	**WP120**
Washer-Spring	(6)	**GHF381**
'Push' Nut *(Special fixing)*	(6)	**ZKC1984**
Rear Light Panel	(1)	**XKC147**
Spare Wheel Well	(1)	**WKC145**
Boot Floor Panel - Main		
Rh	(1)	**YKC3808**
Lh	(1)	**WKC135**
Boot Floor Panel - Outer		
Rh	(1)	**XKC144**
Lh	(1)	**XKC143**
Rear Lower Sill Panel (Inner): *Joins to rear lower sill panels (outer) WKC79/WKC80. See also Rear Wings & Arches (Convertible & Coupe).*		
Rh	(1)	**WKC208**
Lh	(1)	**WKC207**
Rear Chassis Leg		
Rh	(1)	**WKC4744**
Lh	(1)	**WKC4743**
Boot Bulkhead Panel	(1)	**WKC3561**
Bulkhead Panel *See also: **Rear Floor/Trailing Arm Mountings - Repair Panels** on page 82.*	(1)	**XKC3630**

Boot Lid & Fittings

Convertible & Coupe

Description	Qty Req.	Part No.
Boot Lid;		
Vehicles to VIN 402000 *With recess for 'Turn' button lock.*	(1)	**XKC141**
Vehicles from VIN 402001 *Flush fit for 'Push' button lock.*	(1)	**XKC3854**
Boot Lid Seal	(1)	**YKC68**

BOOT HINGE & FITTINGS

Description	Qty Req.	Part No.
Boot Hinge Assembly;		
Vehicles to 1978		
Rh	(1)	**XKC3**
Lh	(1)	**XKC2**
Vehicles from 1978		
Rh	(1)	**XKC3420**
Lh	(1)	**XKC3419**
Setscrew *(Hinge to boot lid)*	(4)	**SH108161**
Washer-Spring	(4)	**GHF382**
Washer-Flat	(4)	**GHF312**
Setscrew *(Hinge to body)*	(4)	**SH106161**
Washer-Spring	(4)	**GHF381**
Washer-Flat	(4)	**WC106041**
Bracket *(Boot courtesy lamp 'trip')* *Left hand hinge, late vehicles only.*	(1)	**YKC4098**
Setscrew	(1)	**SH106161**
Washer-Flat	(2)	**WC106041**
Nut-Nyloc	(1)	**NY106041**

BOOT LOCK & FITTINGS

Description	Qty Req.	Part No.
Boot Release Lock/Barrel;		
'Turn' Button type *(To VIN 402000)*	(1)	**YKC209**
'Push' Button type *(From VIN 402001)*	(1)	**YKC4531**
Retaining Clip *(Lock to boot lid);*		
For 'Turn' Button type Lock	(1)	**723290A**
For 'Push' Button type Lock	(1)	**YKC4530**
Boot Lock/Latch Assembly;		
Vehicles to VIN 402001	(1)	**XKC324**
Vehicles from VIN 402002	(1)	**XKC3851**
Setscrew *(Latch to boot lid)*	(3)	**SX106141**
Washer-Spring	(3)	**GHF381**
Washer-Flat	(3)	**GHF300**
Striker *(Lock/Latch)*	(1)	**YKC504**
Setscrew *(Striker to body)*	(3)	**SH106161**
Washer-Spring	(3)	**GHF331**
Washer-Flat	(3)	**WC701121**

BOOT STAY & FITTINGS

Description	Qty Req.	Part No.
Telescopic type - *Early Vehicles*		
Boot Stay Assembly	(1)	**612473**
Setscrew *(Stay to boot lid)*	(2)	**SE106121**
Washer-Spring	(2)	**WL106001**
Setscrew *(Stay to body)*	(2)	**SE106121**
Washer	(2)	**WS106001**
Washer/Spacer	(2)	**GHF300**
Nut-Nyloc	(2)	**NY106041**
Gas strut type - *Late Vehicles*		
Boot Stay Gas Strut	(2)	**XKC3893**
Clevis Pin	(4)	**PC106241**
Washer-Flat	(4)	**WD106041**
Retaining Clip	(4)	**UKC7840**

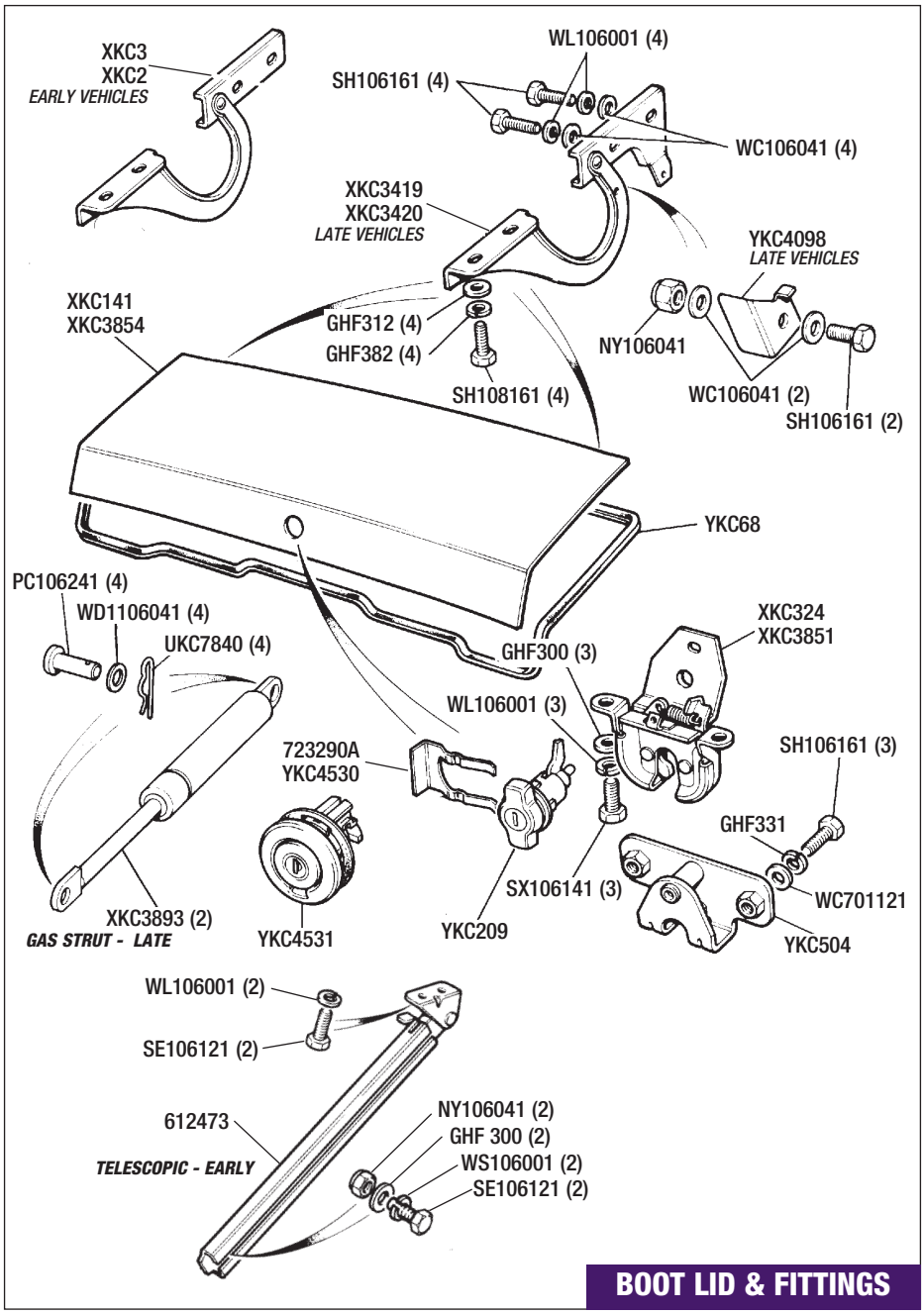

BOOT LID & FITTINGS

TO ORDER: 01522 568000
www.rimmerbros.co.uk

Windscreen/Finishers & Rear Glass

*See also; **EXTERIOR TRIM & BADGES, and INTERIOR & TRIM.***

Description	Qty Req.	Part No.
Windscreen		
Tinted/Laminated	(1)	**WKC4782**
Clear/Laminated	(1)	**WKC4781**
Sealing Kit	(1)	**RTC2063**
Windscreen Base/Finisher;		
RHD Vehicles	(1)	**WKC339**
LHD Vehicles	(1)	**WKC5112**
Screw-Self Tapping	(2)	**YZ3404**
Spacer/Washer	(2)	**NKC482**
'Clinch' Nut	(2)	**ZKC698**
'Snap Cap' *(For YZ3404)*	(2)	**YKC2866**
Finisher *(Windscreen surround)*		
Rh	(1)	**WKC255**
Lh	(1)	**WKC254**
Finisher/Capping *(Surround)*	(1)	**ZKC430**
Finisher Spacer	(4)	**ZKC368**
Weatherstrip *(Coupe only)* *Windscreen pillar.*	(2)	**ZKC3850**

*Note; For Header Rail Cover and Roof & Windscreen Pillar Mouldings, please refer to; **EXTERIOR TRIM & BADGES, Body Mouldings & Finishers.***

REAR SCREEN (Coupe)

Description	Qty Req.	Part No.
Rear Screen *(Tinted/heated)*	(1)	**YKC4202**
Rubber Seal *(Rear Screen)*	(1)	**WKC114**

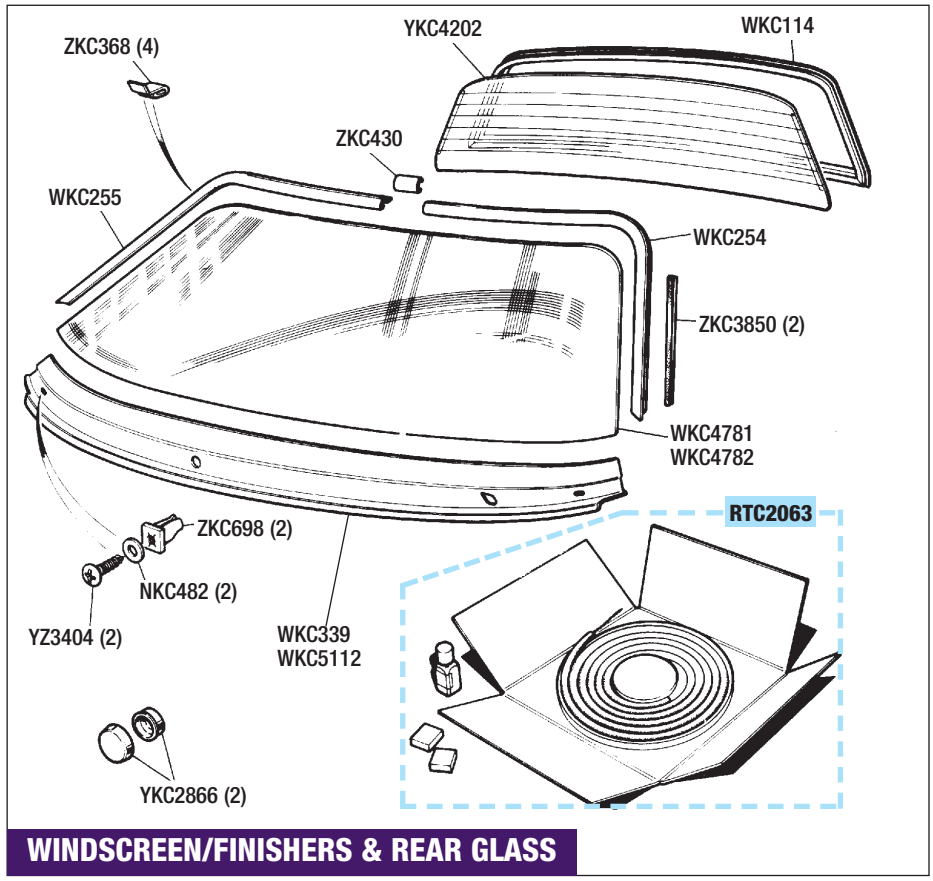

WINDSCREEN/FINISHERS & REAR GLASS

GROMMETS & BLANKING PLUGS

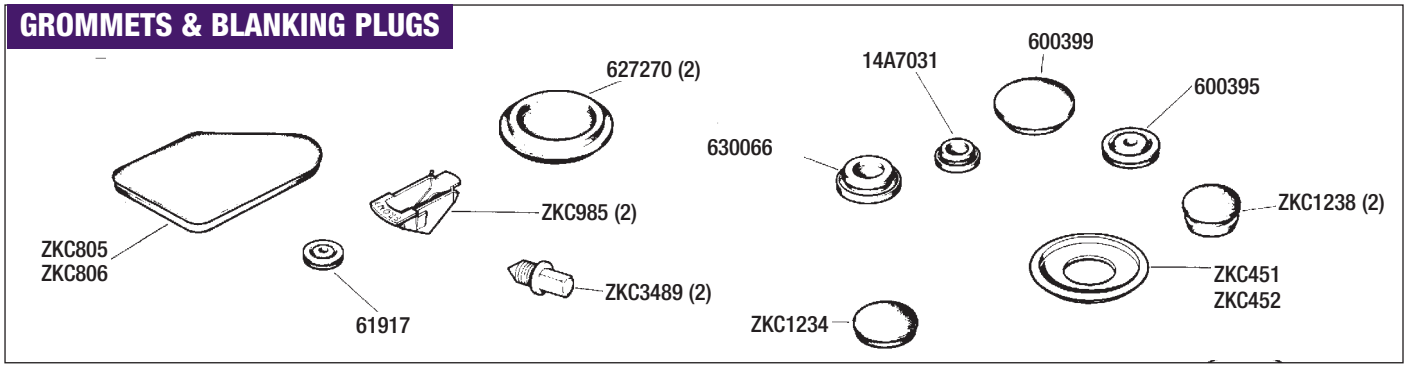

Grommets & Blanking Plugs

Description	Qty Req.	Part No.
Blanking Grommet 1"	(a/r)	**600399**
Cable Grommet 1"	(a/r)	**600395**
Blanking Plug	(2)	**ZKC1238**
Blanking Plate; *Plastic - 73mm diameter. Located at the rear of inner wing.*		
Rh	(1)	**ZKC451**
Lh	(1)	**ZKC452**
Blanking Grommet 42mm	(2)	**627270**
Plug *Rear/lower front wing-sill.*	(2)	**ZKC985**
Stud-Jacking Point	(2)	**ZKC3489**
Cable Grommet 11mm	(a/r)	**61917**
Blanking Plate *(Plastic)* *Inner flitch plates, TR7 only.*		
Rh	(1)	**ZKC806**
Lh	(1)	**ZKC805**
Blanking Grommet;		
25mm	(a/r)	**ZKC1234**
3/4"	(a/r)	**630066**
12mm	(a/r)	**14A7031**

Body Mouldings & Finishers

Convertible & Coupe models.

Description	Qty Req.	Part No.
Front Spoiler; *Not required if fitting Body Style Kit. See also: ACCESSORIES.*		
'BL' Style Spoiler		
Original equipment	(1)	**GLZ610**
Fibreglass	(1)	**GLZ610Fg**
Works 'Rally' type Spoiler *Fibreglass spoiler with Wrap round sides.*	(1)	**RB7175**
Fitting Kit *(For GLZ610 & GLZ610Fg)*	(1)	**GLZ610FK**
Setscrew	(3)	**SH106201**
Washer-Flat	(6)	**WC106041**
Washer-Flat	(6)	**GHF314**
Washer-Spring	(6)	**WL106001**
Nut	(6)	**GHF212**
Setscrew	(2)	**SH106251**
Washer-Flat	(2)	**WM91**
Washer-Spring	(2)	**WL106001**
Front Panel/Grille Strip;		
Convertible		
Rh	(1)	**WKC3674**
Lh	(1)	**WKC3673**
Coupe		
Rh	(1)	**WKC478**
Lh	(1)	**WKC477**
Plastic 'Rivet'	(6)	**GHF1083**
Blanking Plate *UK specification vehicles. Required if cruise lights not fitted.*	(2)	**ZKC1472**
Setscrew*	(4)	**SE105105**
Washer-Spring*	(4)	**WL105001**
Washer-Flat* **Retains plate ZKC1472 & front grille strip corner.*	(4)	**WA105001**
Moulding *(Roof/screen pillar)**		
Rh	(1)	**WKC338**
Lh	(1)	**WKC337**
Weatherstrip* *(Screen pillar) *Coupe only.*	(2)	**ZKC3850**
Blanking Plate *(Plastic) Inner flitch plates, TR7 only.*		
Rh	(1)	**ZKC806**
Lh	(1)	**ZKC805**
Door Corner Protector *Can also be fitted to boot lid corners.*		
Rh	(1)	**ZKC2583**
Lh	(1)	**ZKC2582**
Screw-Self Tapping*	(2)	**NKC479**
Washer* **Alternative fitting to rivet RA608255.*	(2)	**NKC482**
Rivet+	(2)	**713531**
Button+ *+Alternative fitting to screw NKC479.*	(2)	**ADU3298**
Sill Kick Plate; *See 'Kit' Panel below.*		
Original *(Plastic) - Each*	(2)	**XKC331PA**
Aftermarket *(Pair) (Stainless steel) With 'Triumph' logo - see 'Accessories'.*	(1)	**RL1067**
Plastic 'Rivet'	(8)	**GHF1082**
Outer Sill Moulding *See 'Kit' Panel below.*	(2)	**YKC174**
End Cap-Sill Moulding	(4)	**ZKC773**
Plastic Clip	(20)	**GHF1167**
Rear Quarter Grille*		
Rh	(1)	**WKC570**
Lh	(1)	**WKC550**
Seal/Gasket*	(2)	**ZKC2571**
'T' Bolt* *(Grille to body)*	(8)	**ZKC515**
Spacer*	(4)	**ZKC516**
Washer-Sealing*	(8)	**ZKC510**
Washer-Flat*	(8)	**WP20X**
Washer-Spring*	(8)	**WF104001**
Nut*	(8)	**NH104041**

BODY MOULDINGS & FINISHERS

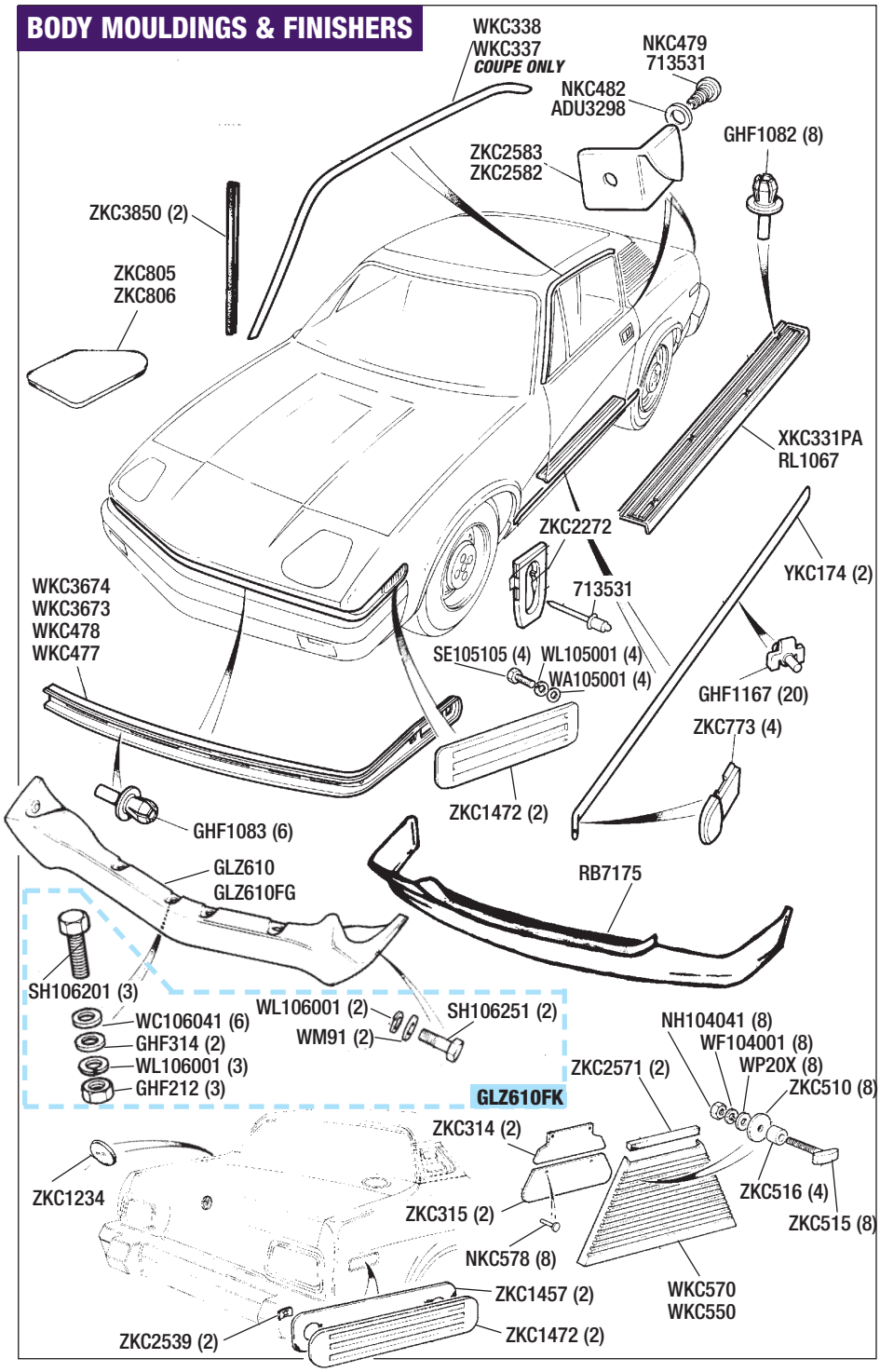

Description	Qty Req.	Part No.
Upper Flap* *(Air extractor)*	(2)	**ZKC314**
Lower Flap* *(Air extractor)*	(2)	**ZKC315**
Button/Rivet* **Coupe Only - Air Vent*	(8)	**NKC578**
Blanking Grommet *(Aerial)*	(1)	**ZKC1234**
Blanking Plate *See 'Kit' Panel below. UK specification vehicles. Required if cruise lights not fitted. Note: The original blanking plate ZKC1454 is no longer available. As an alternative you can fit the Front blanking plate ZKC1472, with the corresponding fittings.*	(2)	**ZKC1472**
Gasket *(Blanking plate to wing)*	(2)	**ZKC1457**
Fastening Clip *Blanking plate to wing.*	(4)	**ZKC2539**
Boot Lid Spoiler *(Aerodynamic)* *This optional boot lid spoiler has been designed to compliment our Mk3 body kit, but will look superb on any TR7/TR8. See Accessories for photo. Supplied in gelcoat, from the mould finish, ready for painting.*	(1)	**RB7223**

SILL KICK PLATE KIT

Includes a pair of original door kickplates and retaining rivets.

Kick Plate Kit (1) **RB2021**

BLANK PLATE KIT

Includes a car set of 4 wing blank plates inc. retaining screws and washers.

Blank Plate Kit (1) **RB2022**

OUTER SILL STRIP KIT

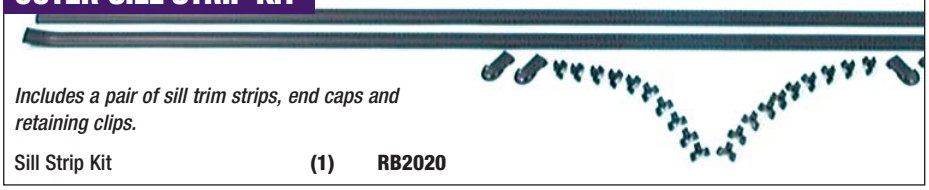

Includes a pair of sill trim strips, end caps and retaining clips.

Sill Strip Kit **(1)** **RB2020**

TO ORDER: 01522 568000
www.rimmerbros.co.uk

CONVERTIBLE

Body Finishers & Miscellaneous Trim

Convertible Models only.
This section is repeated in Hood & Frame.

WINDSCREEN FINISHERS & TRIM

Description	Qty Req.	Part No.
Front Edge Screen Finisher	(1)	**YKC3610**
Centre Screen Trim *(Inside car);*		
Black	(1)	**WKC3937PA**
Beige	(1)	**WKC3937AA**
Blue	(1)	**WKC3937JJ**
Tan	(1)	**WKC3937AM**
Rear Edge Screen Finisher;		
Black	(1)	**ZKC1432PA**
Beige	(1)	**ZKC1432AA**
Blue	(1)	**ZKC1432JJ**
Tan	(1)	**ZKC1432AM**
Off White	(1)	**ZKC1432NE**
Capping *(Door seal to screen pillar);*		
Rh	(1)	**YKC3377**
Lh	(1)	**YKC3376**
Rivet *(Capping to pillar)*	(2)	**RU608253**
Side Finisher/Drip Rail *(Windscreen pillar);*		
Rh	(1)	**WKC3950**
Lh	(1)	**WKC3949**
Weatherstrip (Rh or Lh) *Windscreen pillar.*	(2)	**XKC3848**

BODY/COCKPIT TRIM

Description	Qty Req.	Part No.
Top Rubber-Quarterlight		
Rh	(1)	**YKC3283**
Lh	(1)	**YKC3282**
Guide-Drop Glass (Rear)		
Rh	(1)	**XKC2972**
Lh	(1)	**XKC2971**
'Pop Rivet'	(2)	**RB6407**
Door Corner Protector		
Rh	(1)	**ZKC2583**
Lh	(1)	**ZKC2582**
Capping *(Door seal to 'B' post);*		
Rh	(1)	**YKC3331**
Lh	(1)	**YKC3330**
Screw *(Capping to body)*	(2)	**AB108054**
Finisher *(Rear Cockpit);*		
Rh	(1)	**XKC2861**
Lh	(1)	**XKC2860**
Plastic 'Stud'	(8)	**713511**
Rivet	(8)	**713531**
Cover/Trim *(Hood frame hinge);*		
Rh	(1)	**WKC3296**
Lh	(1)	**WKC3295**
Screw-Self Tapping	(8)	**AB108054**
Washer-Cup	(8)	**WA105004**

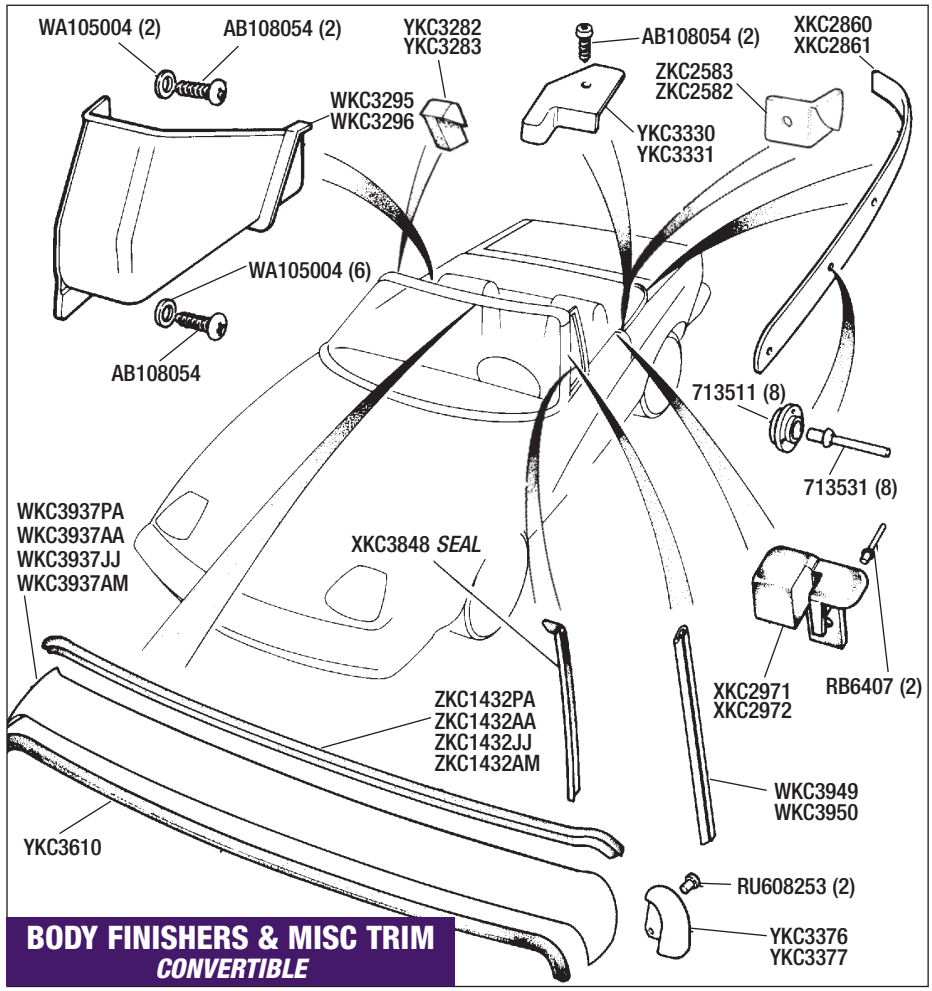

BODY FINISHERS & MISC TRIM
CONVERTIBLE

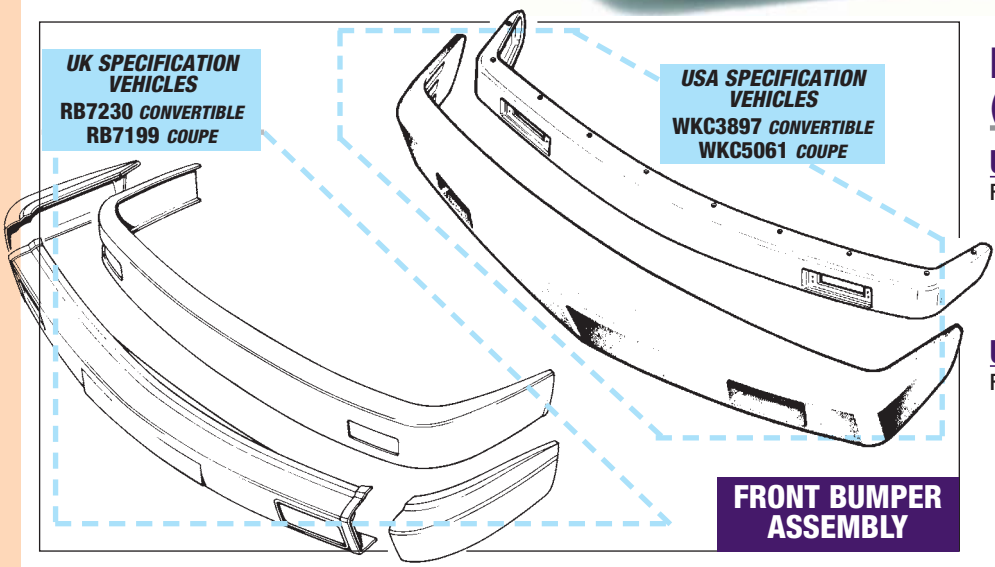

FRONT BUMPER ASSEMBLY

Front Bumper Assembly (Complete)

UK Specification

Front Bumper Assembly *(UK Spec);*

Convertible *(3 piece covers)* (1) **RB7230**
Includes Bumper bar, 3 plastic covers, clips, nuts, bolts & washers. Less mounting blocks & pivot rod.

Coupe *(3 piece covers)* (1) **RB7199**
Includes Bumper bar, 3 plastic covers, clips, nuts, bolts & washers.

USA Specification

Front Bumper Assembly *(USA Spec);*

Convertible *(1 piece cover)* (1) **WKC3897**
Includes, Bumper bar, 1 piece rubber cover, clips, bolts & washers. Less mounting blocks & pivot rod.

Coupe *(1 piece cover)* (1) **WKC5061**
Includes, Bumper bar, 1 piece rubber cover, clips, bolts & washers.

FRONT & REAR BUMPER COVERS - *UK/USA Specification*

UK Original specification TR7 bumper bars (front & rear) were fitted with 3 separate plastic covers, held in position by nuts, bolts, and special retaining clips. The centre plastic section is also held underneath by a metal retaining strip, which forms part of the bumper bar. USA original specification bumper bars (front & rear) were fitted with a one-piece rubber cover, held by clips & bolts to the bumper bar.

Front Bumper Covers & Fittings

UK Specification

FRONT BUMPER COVERS

Description	Qty Req.	Part No.
Front Centre Section *(UK Spec);*		
Plastic	(1)	**WKC1212**
Fibreglass *(Reproduction)*	(1)	**WKC1212FG**
Front Corner Section - Plastic *(UK Spec);*		
Rh	(1)	**WKC1216**
Lh	(1)	**WKC1215**
Front Bumper Cover Kit *(UK Spec)* *Includes front centre & corner sections and 2 lamp surround inserts.*	(1)	**RB7158**
Front Cover Fitting Kit *(UK Spec)* *Includes fittings marked*.*	(1)	**RB7158FK**
Insert/Surround *(Sidelamp)*	(2)	**YKC874**
Corner Bumper Kit (Front & Rear) *UK Spec. Includes pair of front and rear corner bumpers (original). See photo below.*	(1)	**RB7697**
Corner Bumper Fitting Kit	(1)	**RB7697FK**

COVER FITTINGS

Description	Qty Req.	Part No.
Front Cover Fitting Kit *(UK Spec)* *Includes items marked *.*	(1)	**RB7158FK**
Retaining Plate/Clip*	(4)	**ZKC2251**
Washer-Flat*	(4)	**GHF300**
Washer-Spring*	(4)	**WL106001**
Nut*	(4)	**GHF212**
Setscrew*+	(4)	**SH106161**
Washer-Flat*+	(4)	**GHF300**
Washer-Flat*+	(4)	**WC106041**
Washer-Spring*+	(4)	**WL106001**
Nut*+ *+Theses items locate end covers*	(4)	**GHF212**
Insert/Surround *(Sidelamp)*	(2)	**YKC874**

USA Specification

FRONT BUMPER COVER

Description	Qty Req.	Part No.
Bumper Cover-1 piece Rubber *USA Spec.*	(1)	**RTC1166**
Front Cover Fitting Kit *(USA Spec)* *Includes fittings marked +.*	(1)	**RTC1166FK**
Insert/Surround *(Sidelamp)*	(2)	**YKC874**

COVER FITTINGS

Description	Qty Req.	Part No.
Front Cover Fitting Kit *(USA Spec)* *Includes items marked +.*	(1)	**RTC1166FK**
Retaining Plate/Clip+	(10)	**ZKC227**
Washer-Flat+	(10)	**WC105001**
Nut+	(10)	**NH105041**
Setscrew+	(3)	**SH106251**
Setscrew+	(4)	**SH106201**
Washer-Flat+	(7)	**GHF314**
Insert/Surround *(Sidelamp)*	(2)	**YKC874**

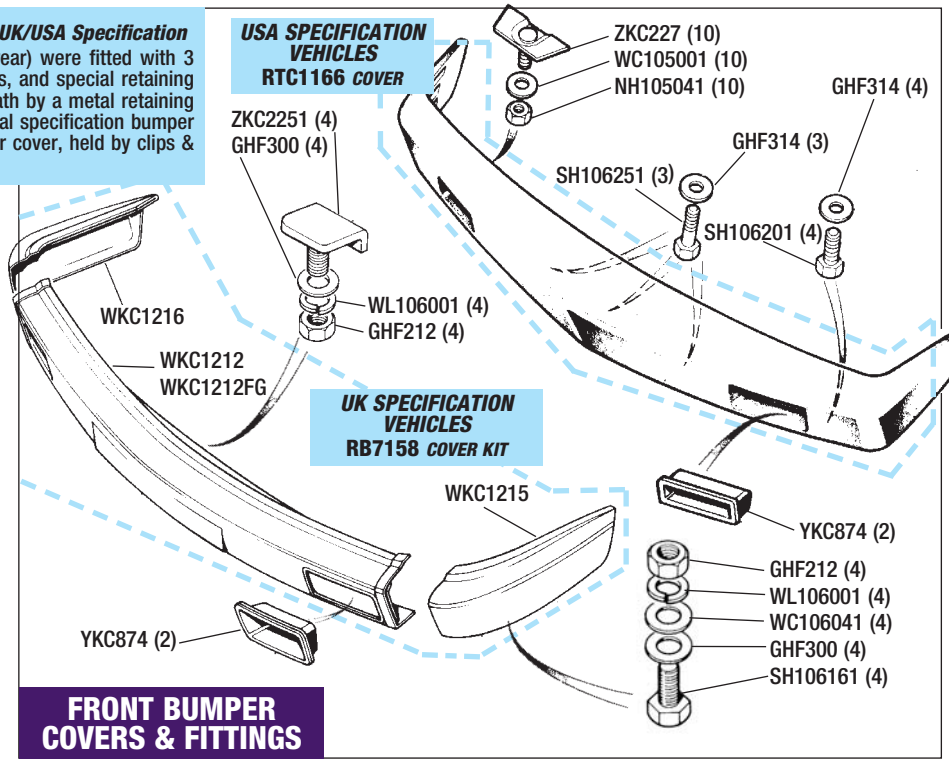

FRONT BUMPER COVERS & FITTINGS

Front Bumper Bar (Bare) & Bumper Mountings

Convertible

Description	Qty Req.	Part No.
Front Bumper Bar-Bare (Convertible); *Less mounting blocks & pivot rod.*		
UK Specification	(1)	**WKC3988**
USA Specification	(1)	**WKC3988USA**
Flexible Mounting Block		
Rh	(1)	**XKC3792**
Lh	(1)	**XKC3791**
Washer-Special	(6)	**ZKC2244**
Washer-Spring	(6)	**GHF382**
Nut	(6)	**GHF213**
Nut-Special	(2)	**AAU3688A**
'Bridge' Clamp/Bracket	(2)	**ZKC3702**
Bolt-Special *(Square shank)*	(4)	**ZKC3709**
Washer	(4)	**GHF382**
Nut	(4)	**GHF213**
Centre Pivot Rod	(1)	**YKC3561**
Bush-Centre Pivot	(1)	**ZKC3668**
Plate-Centre Pivot	(1)	**ZKC3652**
Bolt *(Centre pivot rod)*	(2)	**BH110151**
Washer-Spring	(2)	**WL110001**
Washer-Plain	(4)	**WC110061**
'Anti-Vibration' Weight;		
Rh	(1)	**RB7191**
Lh	(1)	**RB7192**
Screw *(Weight fixing)*	(4)	**RB7371**

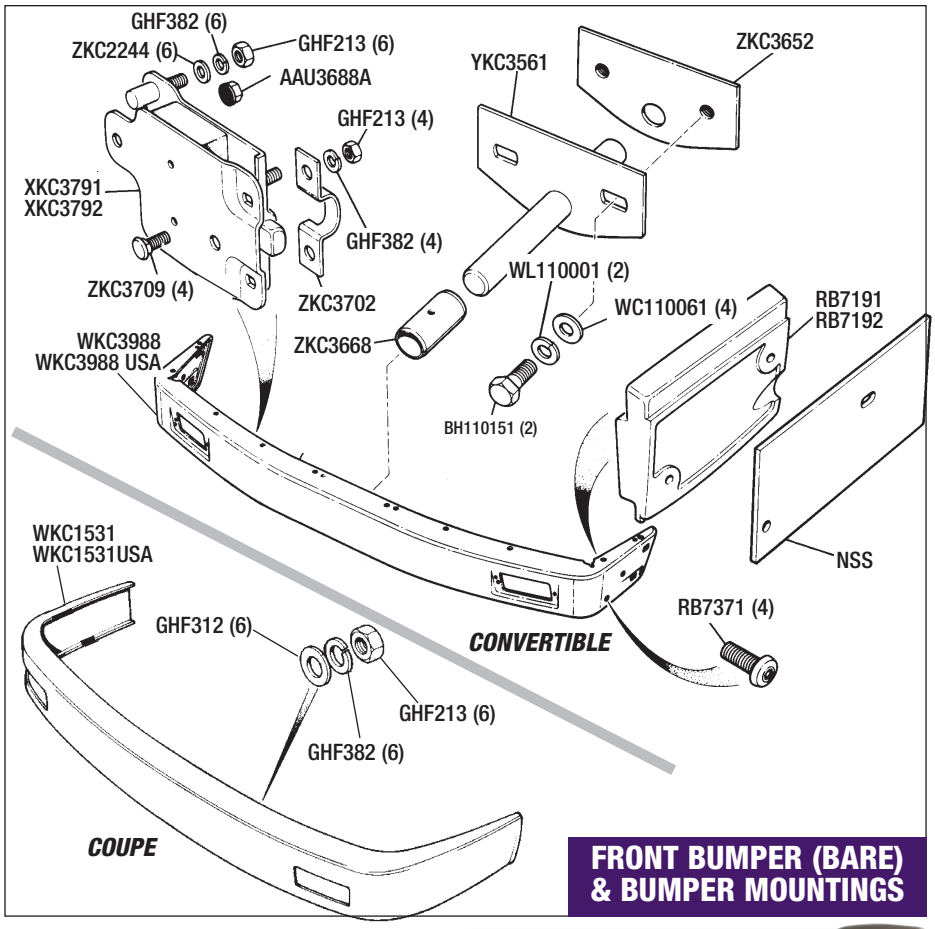

FRONT BUMPER (BARE) & BUMPER MOUNTINGS

Coupe

Description	Qty Req.	Part No.
Front Bumper Bar-Bare (Coupe);		
UK Specification	(1)	**WKC1531**
USA Specification	(1)	**WKC1531USA**
Nut	(6)	**GHF213**
Washer-Spring	(6)	**GHF382**
Washer-Flat	(6)	**GHF312**

TO ORDER: 01522 568000
www.rimmerbros.co.uk

Rear Bumper/Covers & Fittings

UK Specification

REAR BUMPER & COVERS

Description	Qty Req.	Part No.
Rear Bumper Assembly *(UK Spec)*	(1)	**WKC1508**
Includes Bumper bar, 3 plastic covers, clips, nuts, bolts & washers.		
Rear Bumper Covers *(UK Spec);*		
Centre Section	(1)	**WKC1207**
Corner Section		
Rh	(1)	**WKC1209**
Lh	(1)	**WKC1208**
Rear Bumper Cover Kit *(UK Spec)*	(1)	**RB7238**
Includes centre & corner sections.		
Rear Cover Fitting Kit *(UK Spec)*	(1)	**RB7238FK**
*Includes fittings marked *.*		
Corner Bumper Kit (Front & Rear)	(1)	**RB7697**
UK Spec. Includes pair of front and rear corner bumpers (original).		
Corner Bumper Fitting Kit	(1)	**RB7697FK**
Rear Bumper Bar (Bare) *(UK Spec)*	(1)	**WKC1504**
Blanking Grommet	(2)	**609190**
Washer-Flat	(6)	**GHF312**
Washer-Spring	(6)	**GHF382**
Nut	(6)	**GHF213**

COVER FITTINGS

Description	Qty Req.	Part No.
Rear Cover Fitting Kit *(UK Spec)*	(1)	**RB7238FK**
*Includes items marked *.*		
Retaining Plate/Clip*	(5)	**ZKC2251**
Washer-Flat*	(5)	**GHF300**
Washer-Spring*	(5)	**WL106001**
Nut*	(5)	**GHF212**
Retaining Plate*	(2)	**ZKC1020**
Washer-Spring*	(2)	**WL106001**
Setscrew*	(2)	**SH106161**
Setscrew*	(2)	**SH105161**
Washer-Spring*	(2)	**WL105001**
Washer (Coach)*	(2)	**WC105001**
Setscrew*	(6)	**SH106161**
Washer-Flat*	(6)	**WC106041**
Washer-Spring*	(6)	**WL106001**
Nut*	(6)	**GHF212**

USA Specification

REAR BUMPER & COVER

Description	Qty Req.	Part No.
Rear Bumper Assembly *(USA Spec)*	(1)	**WKC252**
Includes Bumper bar, 1 piece rubber cover,clips, bolts & washers.		
Bumper Cover-1 Piece Rubber	(1)	**RTC1167**
USA Spec.		
Rear Cover Fitting Kit *(USA Spec)*	(1)	**RB1167FK**
Includes fittings marked +.		
Rear Bumper Bar (Bare) *(USA Spec)*	(1)	**WKC1504USA**
'Tie Down' Bracket		
Rh	(1)	**ZKC2648**
Lh	(1)	**ZKC2647**
Washer-Flat	(6)	**GHF301**
Washer-Spring	(6)	**GHF382**
Nut	(6)	**GHF213**

COVER FITTINGS

Description	Qty Req.	Part No.
Rear Cover Fitting Kit *(USA Spec)*	(1)	**RB1167FK**
Includes items marked +.		
Retaining Plate/Clip+	(9)	**ZKC227**
Washer-Flat+	(9)	**WC105001**
Nut+	(9)	**NH105041**
Setscrew+	(9)	**SH106201**
Washer-Flat+	(7)	**WC10604**
Nut+	(2)	**NH105041**
Washer-Spring+	(2)	**WL105001**
Washer-Flat+	(2)	**WC105001**

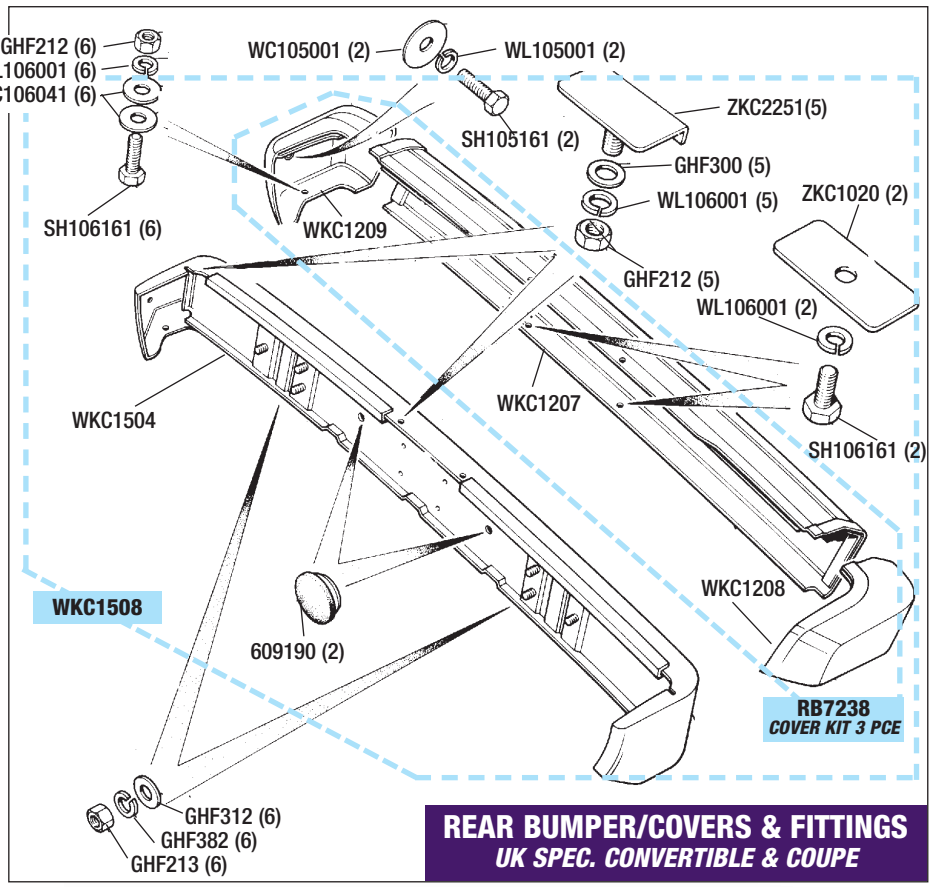

REAR BUMPER/COVERS & FITTINGS
UK SPEC. CONVERTIBLE & COUPE

BUMPER CORNER SET - RB7697
FITTING KIT (RB7697FK) AVAILABLE SEPARATELY.

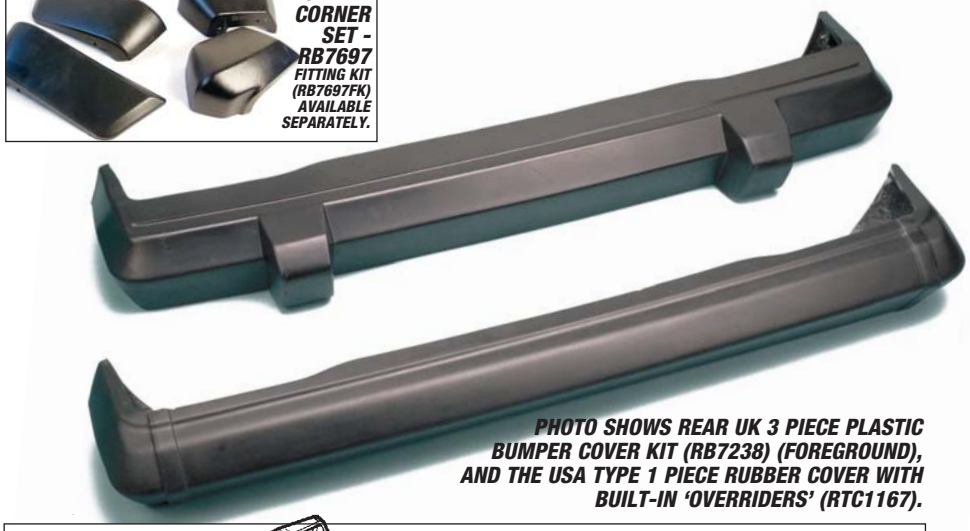

PHOTO SHOWS REAR UK 3 PIECE PLASTIC BUMPER COVER KIT (RB7238) (FOREGROUND), AND THE USA TYPE 1 PIECE RUBBER COVER WITH BUILT-IN 'OVERRIDERS' (RTC1167).

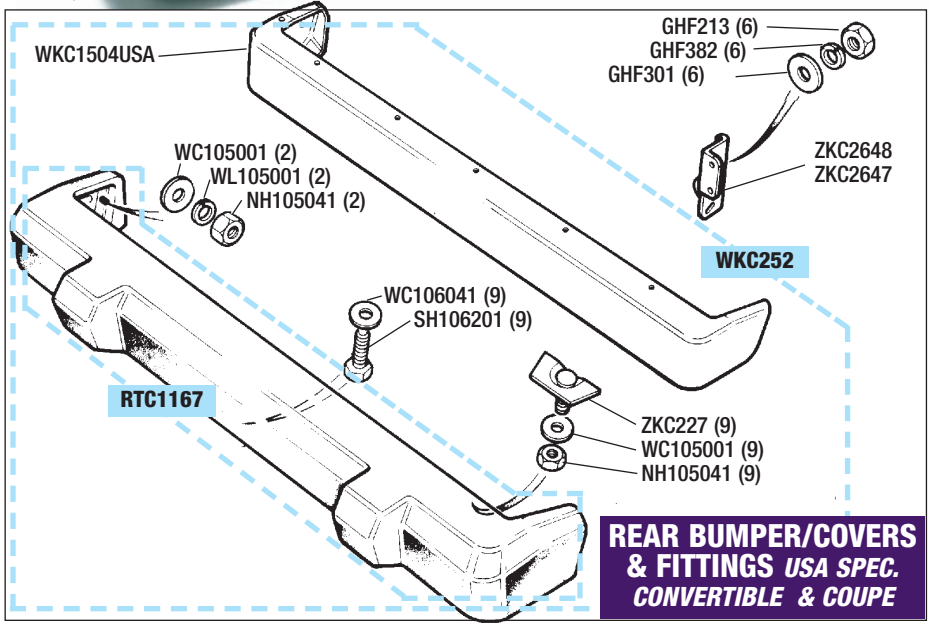

REAR BUMPER/COVERS & FITTINGS ***USA SPEC. CONVERTIBLE & COUPE***

Badges & Transfers

Description	Qty Req.	Part No.
EARLY VEHICLES TO 1978 *('ACG' Body Numbers)*		
'TR7' Front Panel Transfer;		
Black	(1)	**ZKC1311**
Gold	(1)	**ZKC1313**
Silver	(1)	**ZKC1312**
'Triumph TR7' Boot Transfer;		
Black	(1)	**ZKC1301**
Gold	(1)	**ZKC1303**
Silver	(1)	**ZKC1302**
'British Leyland' Wing Badge	(2)	**725525**
Blue badge approx' 1" square, Fitted to very early cars only.		
Side Stripe Kit *(Per car);*		
Optional factory fitting.		
Black	(1)	**RB7183Black**
Gold	(1)	**RB7183Gold**
Silver	(1)	**RB7183Silver**
Wheel Trim/Centre Badge;		
Vehicles to ACG13000	(4)	**YKC1334**
Vehicles from ACG13001	(4)	**ZKC3120**
See also; ROAD WHEELS.		
'TR7' Glove Box Badge	(1)	**ZKC3269**
'Rimmer Bros' Decal *(Black/silver)*	(1)	**RA1055**
Self adhesive foil.		
'Triumph' Tax Disc Holder	(1)	**RX1355**
Free of charge.		
VEHICLES FROM 1979 & FUTURE *'TCG' & 'VIN' Body Numbers*		
'Laurel' Leaf-Large *(Front panel);*		
'TCG' body number to VIN 402000.		
Black	(1)	**XKC3700**
Gold	(1)	**XKC3702**
Silver	(1)	**XKC3701**
Red	(1)	**RB7222**
'Triumph' Front Panel Badge	(1)	**XKC3902**
Enamel. Vehicles from VIN 402001 & future.		
'2.0 Litre' Wing Badge	(2)	**BHH2488**
'Laurel' Leaf-Small;		
Optional For front wing, approx' 2" diameter.		
Black	(1)	**RB7178Black**
Gold	(1)	**RB7178Gold**
Silver	(1)	**RB7178Silver**
'Triumph' Boot Transfer;		
Black	(1)	**YKC4206**
Gold		**YKC4208**
Silver	(1)	**YKC4207**
Red	(1)	**RB7193**
'TR7' Boot Transfer;		
Black	(1)	**YKC4216**
Gold	(1)	**YKC4218**
Silver	(1)	**YKC4217**
Red	(1)	**RB7232**
Side Stripe Kit *(Per car);*		
Optional factory fitting.		
Black	(1)	**RB7183Black**
Gold	(1)	**RB7183Gold**
Silver	(1)	**RB7183Silver**
Wheel Trim/Centre Badge	(4)	**ZKC3120**
See also; ROAD WHEELS.		
'TR7' Glove Box Badge	(1)	**ZKC3269**
'Rimmer Bros' Decal *(Black/silver)*	(1)	**RA1055**
Self adhesive foil.		
'Triumph' Tax Disc Holder	(1)	**RX1355**
Free of charge.		

BULLET STYLE DOOR MIRROR (CHROME) GAM105

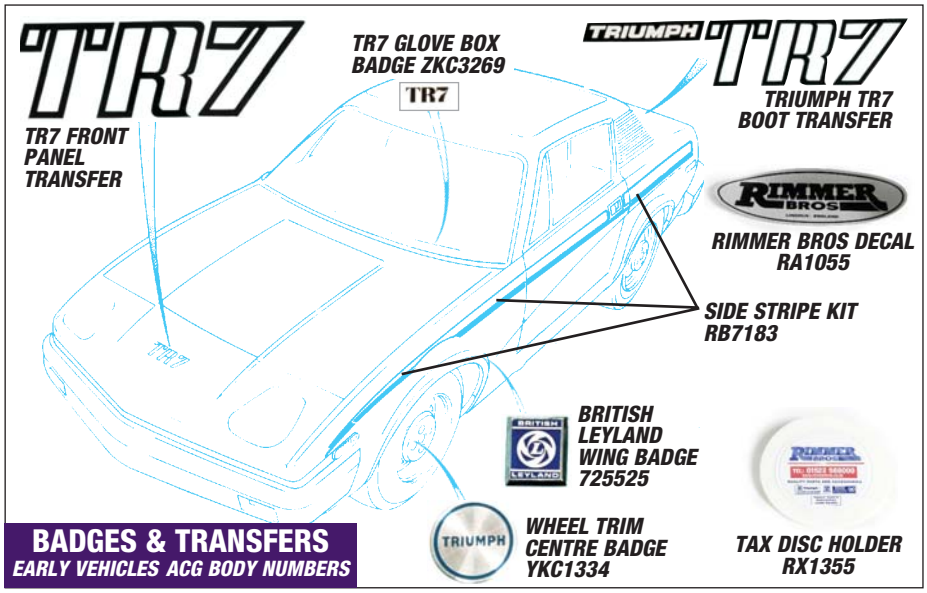

BADGES & TRANSFERS
EARLY VEHICLES ACG BODY NUMBERS

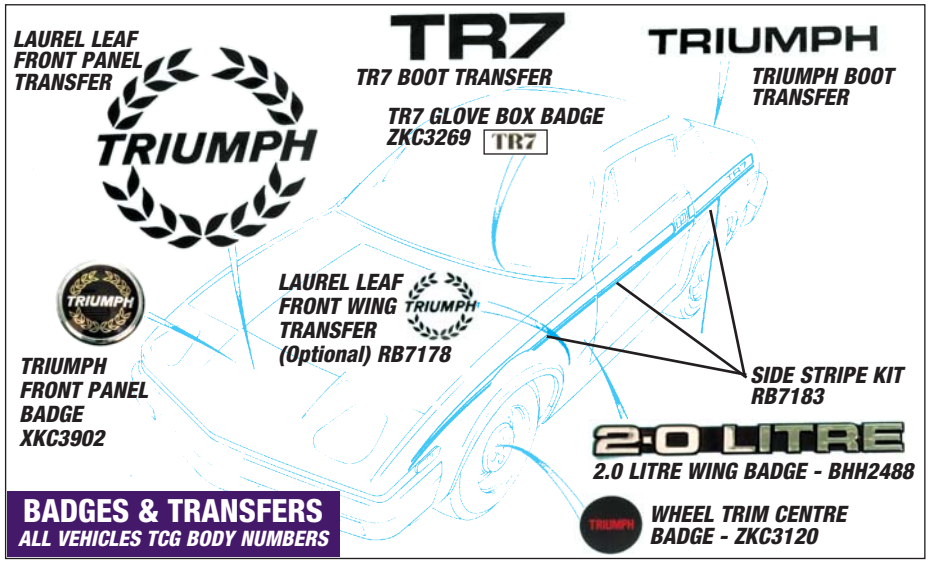

BADGES & TRANSFERS
ALL VEHICLES TCG BODY NUMBERS

Mirrors

Description	Qty Req.	Part No.
DOOR MIRRORS		
Door Mirrors;		
'Bullet' Style (Rh/LH) Chrome	(2)	**GAM105**
Black Original Type		
Rh	(1)	**GAM261**
Lh	(1)	**GAM262**
Mirror Mounting Kit *(Per door)*	(2)	**RB7380**
Includes items marked For original type mirrors.*		
Replacement Mirror Glass	(2)	**RTC2071**
Mounting Plate*	(2)	**DZB5208**
Screw* *(Plate to plinth)*	(2)	**SM105161**
Mounting Plinth/Base*	(2)	**YKC1779**
Screw* *(Plinth to reinforcer)*	(2)	**SM105161**
Nut* *(For SM105161 screw)*	(2)	**NH105041**
Gasket*	(2)	**ZKC1971**
Fixing Plate* *(Reinforcer)*	(2)	**ZKC1964**
Located inside door.		

REAR VIEW MIRROR

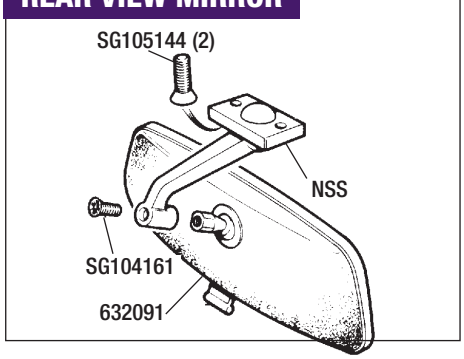

DOOR MIRROR

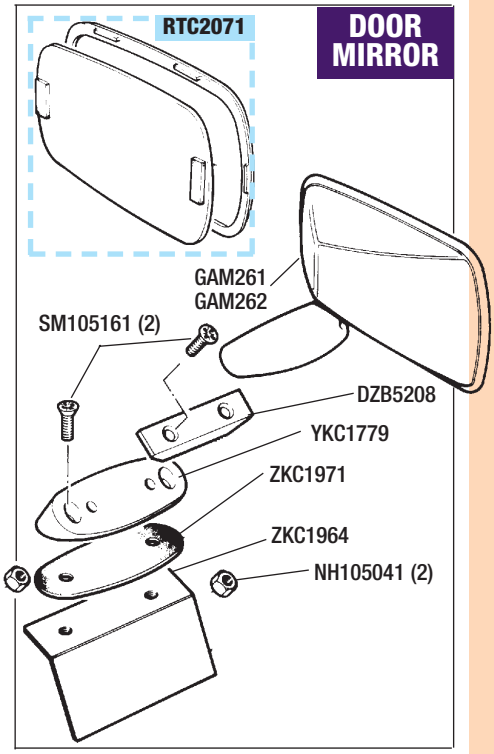

Description	Qty Req.	Part No.
REAR VIEW MIRROR		
Mirror Head only	(1)	**632091**
Screw *(Mirror head to arm)*	(1)	**SG104161**
Screw *(Mirror mounting)*	(2)	**SG105144**

TO ORDER: 01522 568000
www.rimmerbros.co.uk

Description Qty Req. Part No.

IMPORTANT CUSTOMER NOTICE

INTERIOR TRIM

If You modify it - Then you own it!

All our original & re-manufactured Interior Trim is produced to the highest standard. If you genuinely believe that any of our trim (seat covers/carpets etc) does not/will not fit, then we will either exchange it, or offer a full refund (in line with our normal procedure).
If however, any item of trim has been 'modified' in any way whatsoever (ie cut, trimmed, unstitched, etc) by the purchaser in an attempt to 'rectify' any problem, then any claims for 'faulty goods' will be "Null & Void".

INTRODUCTION & SUMMARY TO TR7 INTERIOR TRIM

(ORIGINAL AND RE-MANUFACTURED)

ORIGINAL TRIM SPECIFICATION & AVAILABILITY

The TR7 ceased production in 1981, consequently, original factory interior trim is something of a rarity, which poses quite a few problems for those owners who wish to restore their car to original showroom condition - though we do hold limited stocks of certain factory trim, both in range & colours.

RE-MANUFACTURED TRIM

To overcome this supply problem we have re-manufactured virtually the entire range of TR7 interior trim items, though for the foreseeable future, not in the full range of colours or specification originally issued by the factory. This will compliment the Blue with Blue check, and Tan with Tan Check seat trim that we re-manufactured and re-introduced in 1993.

PARTS LISTINGS & PART NUMBERS

We are a company dedicated to preserving the Triumph marque, and to that end we will endeavour, wherever possible, to re-introduce interior trim items that are currently unobtainable.
Throughout the 'Interior & Trim' section we have retained wherever possible, the original factory part numbering/colour identification system, this will prove useful if you are using our catalogue in conjunction with a BL parts book, and help you identify the trim fitted to your vehicle.
We have listed the most popular (original) TR7 trim, as well as the items that we have had re-manufactured. Under each individual section heading, where the factory implemented a change of trim specification, we have shown the approximate year/range, commission/VIN number, and/or the trim characteristics, ie; material, colour, pattern etc.
Although we have listed Rh & Lh items individually (with their own part number/colour), we strongly recommend you fit all trim items in pairs or vehicle sets to ensure a colour match as your old trim has probably faded. There are a few exceptions due to manufacturing restrictions, where parts are only available in pairs or vehicle sets.

COMPLETE INTERIOR KITS

For those who are contemplating a complete vehicle restoration, or would prefer a colour change (and/or upgrade) of interior trim, we have a full range of Complete Interior Re-Trim Kits available for both Convertible & Coupe models. The kits (which cover manual & automatics, RHD & LHD - Please state exact model when ordering), come in a choice of 5 colours; Black, Beige, Biscuit, Blue and Tan.

Description Qty Req. Part No.

ORIGINAL FACTORY TRIM COLOURS & TRIM CODES

All items of 'coloured' interior trim, have a colour code suffix to help identify trim type/ specification.
The codes - which are stamped on the Commission/VIN plate - have 3 letters, but this is abbreviated to 2 to simplify the part number listings, IE only the 1st & 3rd code letters follow the part number,
eg:- WKC4796RG = Tan/Tan Check.

The Commission/VIN plate can be found either on the rear of the passenger door, or on the front suspension strut mounting (Rh top).

Description Qty Req. Part No.

COLOUR/SPECIFICATION	FACTORY CODE	ABBRV CODE
Sebring White	NAC	NC
Black	PAA	PA
Beige	AAA	AA
Chestnut	AAD	AD
Red (Tartan)	CAC	CC
Green (Emerald)	HAC	HC
Black/Red Check Insert	RAA	RA
Black/Green Check Insert	RAB	RB
Blue/Blue Check Insert *Navy Blue.*	RAH	RH
Tan/Tan Check Insert *Golden Tan.*	RAG	RG
Blue (Navy)	JAJ	JJ
Tan (Golden)	AAM	AM
Off White	NAE	NE
Grey	LAG	LG
Grey Stripe	RAF	RF

COMPLETE INTERIOR TRIM KITS FOR TR7 & TR8

Renovation - Upgrade - or Colour Change ?

If you are considering a complete re-trim of your TR7/TR8 interior, to either change the colour or up-grade to the later trim specification, or even fit Leather trim, then our complete Interior Trim Kits will make such a daunting task so much easier! And by using just one part number you'll have everything you need.

ONE NUMBER = 1 KIT - AND THEY SAVE YOU MONEY!

By purchasing one of our trim kits, not only are you assured of ordering everything, but they also cost less than if you bought the corresponding trim items individually!

WHAT MODELS DO WE HAVE KITS FOR ?

We have kits available for both Convertible and Coupe, covering manual & automatics, RHD & LHD models.

TRIM TYPE & COLOUR - NUMEROUS COMBINATIONS!

Our interior trim kits are available in the 5 most popular colours, Black, Beige, Blue, Tan (or Biscuit in Leather). They cover both early & late type door trim panels (early = round locking hole, late = square locking hole).
Vinyl seat covers with Cloth Insert are available in Black, Blue and Tan, or Plain all Vinyl covers in Black & Beige. Our Leather covers are available in Black, Blue, Tan and Biscuit.
You can even choose between Tufted or Wool carpets.
Of course, if you can't find the kit of your choice, you can always order the parts separately!

THIS IS WHAT OUR KITS CONTAIN

2 Door trim panels and armrests, 'A' post trim (pr), 4 seat covers, seat side trim/covers (2 Prs), 2 headrest covers, 2 knee pads, gearlever gaiter, centre console lid, handbrake gaiter, full carpet set (Convertible inc hood stowage area carpets), rear bulkhead trim panel, 'B' post trim (Pr) *(none pocket type-Coupe)* & rear deck material (Pr) (Convertible). They also include rear parcel shelf (Coupe), windscreen trim material and trim strip (Convertible) and rear screen trim (Coupe).

NB: *Sunvisors are not included in our trim kits at present due to supply problems. If you are contemplating a colour change please refer to 'Sunvisors & Interior Mirror)', or contact us for current information & availability.*

SPECIAL NOTE-DOOR TRIM PANELS

Due to a small internal modification to the door frame to accommodate the later type square locking knob door trim panel, it is not possible to fit the late type door trim panels to the early type doors (round locking knob), unless a recess is fabricated.

HOW TO ORDER THE KIT OF YOUR CHOICE

1) Decide which colour of interior you require; Black, Beige, Blue, Tan (or Biscuit in Leather).
2) Choose the trim type/spec ie; door trim panels with early (round locking hole) or late type (with square locking hole), and whether you want seat covers in either Vinyl with Cloth insert, Plain Vinyl, or Leather.
3) Refer to your vehicle model.
4) Choose either Tufted or Wool carpets.

COMPLETE INTERIOR TRIM KITS in BLACK

ORIGINAL & ALTERNATIVE TRIM KITS

For Right Hand Drive vehicles with Manual Transmission *Kits also available for Lhd & Automatics, please state type when ordering.*

BLACK	TRIM TYPE		TRIM TYPE		TRIM TYPE		TRIM TYPE	
	Door Panels *Round locking knob Plain Vinyl* **Seat Covers** *Vinyl with alternative cloth insert* **Headrest Covers** *Small type headrest*		**Door Panels** *Round locking knob Plain Vinyl* **Seat Covers** *Leather faced with vertical pleats* **Headrest Covers** *Small type headrest*		**Door Panels** *Square locking knob Plain Vinyl* **Seat Covers** *Vinyl with alternative cloth insert* **Headrest Covers** *Large 'D' shape*		**Door Panels** *Square locking knob Plain Vinyl* **Seat Covers** *Leather faced with vertical pleats* **Headrest Covers** *Large 'D' shape*	
	CARPET TYPE		**CARPET TYPE**		**CARPET TYPE**		**CARPET TYPE**	
	Tufted Kit No	*Wool* Kit No	*Tufted* Kit No	*Wool* Kit No	*Tufted* Kit No	*Wool* Kit No	*Tufted* Kit No	*Wool* Kit No
CONVERTIBLE	RB7541	RB7542	RB7543	RB7544	RB7545	RB7546	RB7547	RB7548
COUPE 5 speed	RB7549	RB7550	RB7551	RB7552	RB7553	RB7554	RB7555	RB7556
COUPE 4 speed	RB7557	RB7558	RB7559	RB7560	RB7561	RB7562	RB7563	RB7564

COMPLETE INTERIOR TRIM KITS in BEIGE/BISCUIT

ORIGINAL & ALTERNATIVE TRIM KITS

For Right Hand Drive vehicles with Manual Transmission *Kits also available for Lhd & Automatics, please state type when ordering.*

BEIGE BISCUIT	TRIM TYPE		TRIM TYPE		TRIM TYPE		TRIM TYPE	
	BEIGE **Door Panels** *Round locking knob Plain Vinyl* **Seat Covers** *Vinyl with vertical pleats* **Headrest Covers** *Small type headrest*		**BISCUIT** **Door Panels** *Round locking knob Plain Vinyl* **Seat Covers** *Leather faced with vertical pleats* **Headrest Covers** *Small type headrest*		**BEIGE** **Door Panels** *Square locking knob Plain Vinyl* **Seat Covers** *Vinyl with vertical pleats* **Headrest Covers** *Large 'D' shape*		**BISCUIT** **Door Panels** *Square locking knob Plain Vinyl* **Seat Covers** *Leather faced with vertical pleats* **Headrest Covers** *Large 'D' shape*	
	CARPET TYPE		**CARPET TYPE**		**CARPET TYPE**		**CARPET TYPE**	
	Tufted Kit No	*Wool* Kit No	*Tufted* Kit No	*Wool* Kit No	*Tufted* Kit No	*Wool* Kit No	*Tufted* Kit No	*Wool* Kit No
CONVERTIBLE	RB7565	RB7566	RB7567	RB7568	RB7569	RB7570	RB7571	RB7572
			(Special order only)				*(Special order only)*	
COUPE 5 speed	RB7573	RB7574	RB7575	RB7576	RB7577	RB7578	RB7579	RB7580
			(Special order only)				*(Special order only)*	
COUPE 4 speed	RB7581	RB7582	RB7583	RB7584	RB7585	RB7586	RB7587	RB7588
			(Special order only)				*(Special order only)*	

COMPLETE INTERIOR TRIM KITS in BLUE

ORIGINAL & ALTERNATIVE TRIM KITS

For Right Hand Drive vehicles with Manual Transmission *Kits also available for Lhd & Automatics, please state type when ordering.*

BLUE	TRIM TYPE		TRIM TYPE		TRIM TYPE		TRIM TYPE	
	Door Panels *Round locking knob Vinyl with check insert* **Seat Covers** *vinyl with cloth check insert* **Headrest Covers** *Small type headrest*		**Door Panels** *Round locking knob Vinyl with check insert* **Seat Covers** *Leather faced with vertical pleats* **Headrest Covers** *Small type headrest*		**Door Panels** *Square locking knob Vinyl with check insert* **Seat Covers** *Vinyl with cloth check insert* **Headrest Covers** *Large 'D' shape*		**Door Panels** *Square locking knob Vinyl with check insert* **Seat Covers** *Leather faced with vertical pleats* **Headrest Covers** *Large 'D' shape*	
	CARPET TYPE		**CARPET TYPE**		**CARPET TYPE**		**CARPET TYPE**	
	Tufted Kit No	*Wool* Kit No	*Tufted* Kit No	*Wool* Kit No	*Tufted* Kit No	*Wool* Kit No	*Tufted* Kit No	*Wool* Kit No
CONVERTIBLE	RB7589	RB7590	RB7591	RB7592	RB7593	RB7594	RB7595	RB7596
COUPE 5 speed	RB7597	RB7598	RB7599	RB7600	RB7601	RB7602	RB7603	RB7604
COUPE 4 speed	RB7605	RB7606	RB7607	RB7608	RB7609	RB7610	RB7611	RB7612

COMPLETE INTERIOR TRIM KITS in TAN

ORIGINAL & ALTERNATIVE TRIM KITS

For Right Hand Drive vehicles with Manual Transmission *Kits also available for Lhd & Automatics, please state type when ordering.*

TAN	TRIM TYPE		TRIM TYPE		TRIM TYPE		TRIM TYPE	
	Door Panels *Round locking knob Vinyl with check insert* **Seat Covers** *vinyl with cloth check insert* **Headrest Covers** *Small type headrest*		**Door Panels** *Round locking knob Vinyl with check insert* **Seat Covers** *Leather faced with vertical pleats* **Headrest Covers** *Small type headrest*		**Door Panels** *Square locking knob Vinyl with check insert* **Seat Covers** *Vinyl with cloth check insert* **Headrest Covers** *Large 'D' shape*		**Door Panels** *Square locking knob Vinyl with check insert* **Seat Covers** *Leather faced with vertical pleats* **Headrest Covers** *Large 'D' shape*	
	CARPET TYPE		**CARPET TYPE**		**CARPET TYPE**		**CARPET TYPE**	
	Tufted Kit No	*Wool* Kit No	*Tufted* Kit No	*Wool* Kit No	*Tufted* Kit No	*Wool* Kit No	*Tufted* Kit No	*Wool* Kit No
CONVERTIBLE	RB7613	RB7614	RB7615	RB7616	RB7617	RB7618	RB7619	RB7620
COUPE 5 speed	RB7621	RB7622	RB7623	RB7624	RB7625	RB7626	RB7627	RB7628
COUPE 4 speed	RB7629	RB7630	RB7631	RB7632	RB7633	RB7634	RB7635	RB7636

Note: Please state if manual/auto and RHD/LHD when ordering.

TO ORDER: 01522 568000
www.rimmerbros.co.uk

Door Trim Panels & Fittings

See also; ***BODY PARTS & FITTINGS.***

Note: *Due to limited availability of original spec door panels, certain door panels (remanufactured) are now supplied in pairs only (using an RB number). Where original stock is still available (ie only one side), the original part number is still shown. Note that blue and tan are now also available in plain vinyl (without check pattern) as an alternative if so desired. We strongly recommend door panels are fitted in pairs to ensure colour and trim-type match.*

1. DOOR TRIM PANEL & FITTINGS

1975 - 1978

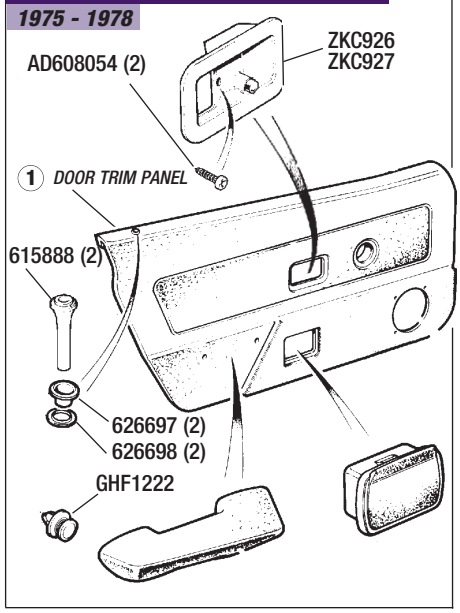

1. Door Trim Panels (1975 to 1978)

Vehicles to ACG25001/ACW30001.
Trim Characteristics; Round hole for internal locking button. Door lamp not fitted.

Description	Qty Req.	Part No.
Black		
Rh	(1)	**XKC2112PA**
Lh	(1)	**XKC2111PA**
Beige		
Pair	(1)	**XKC2111-2AA**
Rh	(1)	**XKC2112AA**
Lh	(1)	**XKC2111AA**
Black-Green Check		
Pair	(1)	**XKC2754-5RB**
Rh	(1)	**XKC2755RB**
Lh	(1)	**XKC2754RB**
Black-Red Check		
Pair	(1)	**XKC2754-5RA**
Rh	(1)	**XKC2755RA**
Lh	(1)	**XKC2754RA**
Clip-Trim Retaining *(9 per door)*	(18)	**GHF1222**
Escutcheon/Finisher *Fits behind interior Door Handle.*		
Rh	(1)	**ZKC927**
Lh	(1)	**ZKC926**
Screw-Retaining	(2)	**AD608054**
Locking Knob *(Internal operation)*	(2)	**615888**
Eyelet *(Internal locking button)*	(2)	**626697**
Ring *(Internal locking button)*	(2)	**626698**

SHOWN HERE IS THE EARLY TYPE DOOR TRIM FOR THE ROUND LOCKING BUTTON, AND THE LATER TYPE DOOR TRIM WHICH HAS THE SQUARE INTERNAL LOCKING BUTTON.

2. DOOR TRIM PANEL & FITTINGS

1978 - 1980

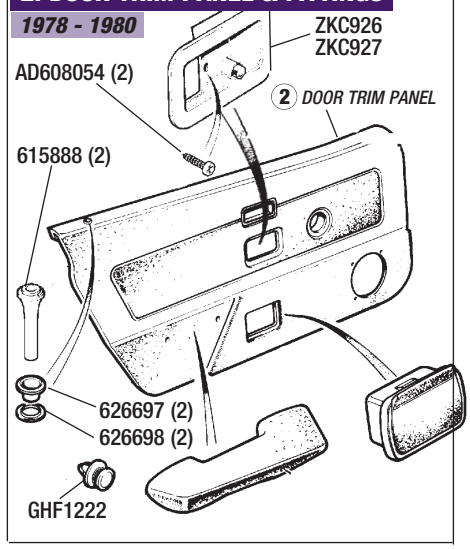

2. Door Trim Panels (1978 to 1980)

From ACG25001/ACW30001 to VIN 402000.
Trim Characteristics; Round hole for internal locking button. Door lamp fitted with black or chrome rim.

Description	Qty Req.	Part No.
Black - Pair	(1)	**RB7701PA**
Beige		
Pair	(1)	**RB7701AA**
Rh	(1)	**XKC2743AA**
Black-Green Check		
Pair	(1)	**XKC2742-3RB**
Rh	(1)	**XKC2743RB**
Lh	(1)	**XKC2742RB**
Black-Red Check		
Pair	(1)	**XKC2742-3RA**
Rh	(1)	**XKC2743RA**
Lh	(1)	**XKC2742RA**
Blue-Blue Check - Pair	(1)	**RB7701RH**
Tan-Tan Check - Pair	(1)	**RB7701RG**
Tan-Plain Vinyl - Pair	(1)	**RB7701AM**
Blue-Plain Vinyl - Pair	(1)	**RB7701JJ**
Blue-Pleated Velour+		
Rh	(1)	**WKC4798JJ**
Lh	(1)	**WKC4797JJ**
Tan-Pleated Velour+		
Rh	(1)	**WKC4798AM**
Lh	(1)	**WKC4797AM**
+European specification.		
Clip-Trim Retaining *(9 per door)*	(18)	**GHF1222**
Escutcheon/Finisher; *Fits behind interior Door Handle.*		
Rh	(1)	**ZKC927**
Lh	(1)	**ZKC926**
Screw-Retaining	(2)	**AD608054**
Locking Knob *(Internal operation)*	(2)	**615888**
Eyelet *(Internal locking button)*	(2)	**626697**
Ring *(Internal locking button)*	(2)	**626698**

DOOR TRIM FITTINGS

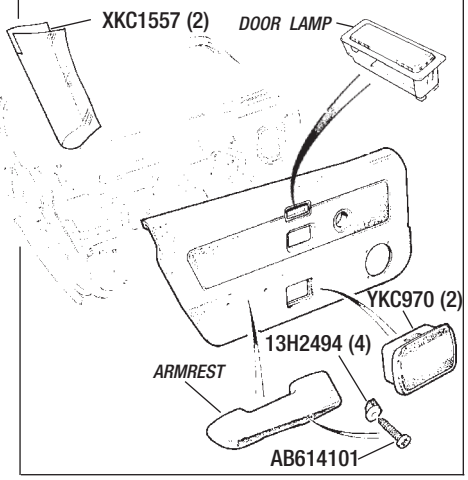

3. DOOR TRIM PANEL & FITTINGS

1980 on

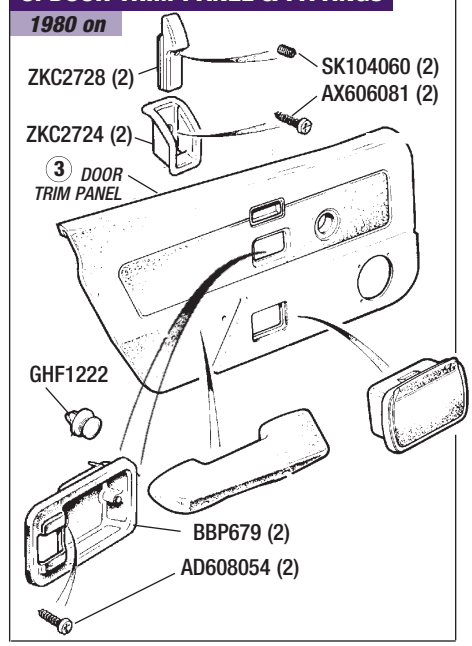

3. Door Trim Panels (1980 onwards)

From VIN 402001 onwards.
Trim Characteristics; Square hole for internal locking button. Door lamp fitted, with chrome rim.

Description	Qty Req.	Part No.
Black - Pair	(1)	**RB7702PA**
Beige - Pair	(1)	**RB7702AA**
Blue-Blue Check - Pair	(1)	**RB7702RH**
Tan-Tan Check		
Pair	(1)	**RB7702RG**
Lh	(1)	**WKC5224RG/OE**
Tan-Plain Vinyl - Pair	(1)	**RB7702AM**
Blue-Plain Vinyl - Pair	(1)	**RB7702JJ**
Blue-Pleated Velour+		
Rh	(1)	**WKC5229JJ**
Lh	(1)	**WKC5228JJ**
Tan-Pleated Velour+		
Rh	(1)	**WKC5229AM**
Lh	(1)	**WKC5228AM**
+European specification.		
Clip-Trim Retaining *(9 per door)*	(18)	**GHF1222**
Escutcheon/Finisher (Rh & Lh) *Fits behind interior Door Handle.*	(2)	**BBP679**
Screw-Retaining	(2)	**AD608054**
Locking Knob *(Internal operation)*	(2)	**ZKC2728**
'Grub' Screw *(For ZKC2728)*	(2)	**SK104060**
Knob Escutcheon *(For ZKC2728)*	(2)	**ZKC2724**
Screw-Retaining *(For ZKC2724)*	(2)	**AX606081**

DOOR TRIM FITTINGS;

Door Lamp

Description	Qty Req.	Part No.
Door Lamp *(Original specification);*		
From ACG25001 to VIN 200001 *Black rim/escutcheon.*	(2)	**TKC3851**
From VIN 200002 & Future *Chrome rim/escutcheon.*	(2)	**TKC5051**
Door Lamp *(Alternative)* *Alternative type if original unavailable.*	(2)	**RB7098**
Bulb (Door Lamp)	(2)	**GLB239**

Armrest

Description	Qty Req.	Part No.
Black		
Rh	(1)	**XKC1232PA**
Lh	(1)	**XKC1231PA**
Beige		
Rh	(1)	**XKC1232AA**
Lh	(1)	**XKC1231AA**
Blue		
Rh	(1)	**XKC1232JJ**
Lh	(1)	**XKC1231JJ**
Tan		
Rh	(1)	**XKC1232AM**
Lh	(1)	**XKC1231AM**
Screw-Self Tapping	(4)	**AB614101**
Locknut-Plastic	(4)	**13H2494**
Ash Tray	(2)	**YKC970**
Water Curtain	(2)	**XKC1557**

Description	Qty Req.	Part No.	Description	Qty Req.	Part No.	Description	Qty Req.	Part No.

PHOTOS SHOW A SELECTION OF OUR DOOR TRIM PANELS. PLEASE REFER TO LISTINGS FOR FULL DETAILS.

DOOR APERTURE SEALS

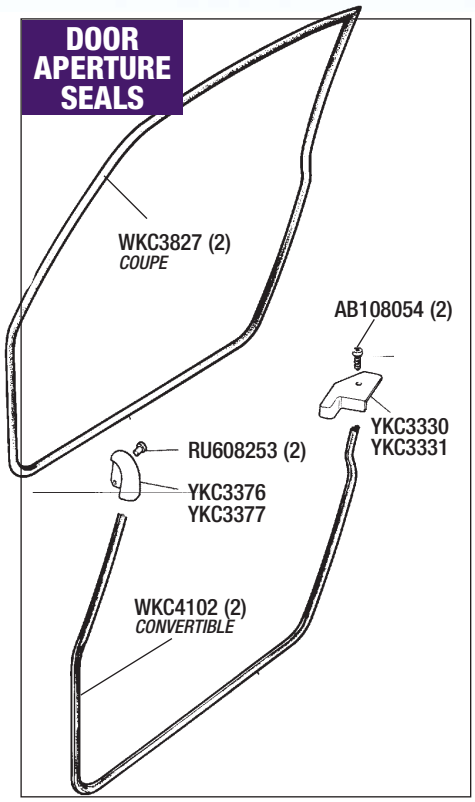

A POST TRIM LOWER & UPPER

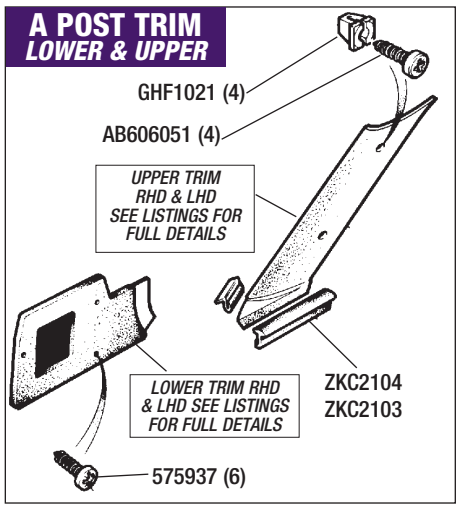

Door Aperture Seals & 'A' Post Trim
(Convertible & Coupe)

For 'B' Post Trim please refer to; Rear Bulkhead - Trim/Shelf & Rear 1/4 Panel ('B' Post), on page 117.

See also; ***EXTERIOR TRIM.***

DOOR APERTURE SEALS

Door Aperture Seal;		
Convertible	(2)	**WKC4102**
Coupe	(2)	**WKC3827**
Capping *(Convertible only);*		
Door seal to screen pillar		
Rh	(1)	**YKC3377**
Lh	(1)	**YKC3376**
Door seal to 'B' post		
Rh	(1)	**YKC3331**
Lh	(1)	**YKC3330**
Rivet *(Capping to pillar)*	(2)	**RU608253**
Screw *(Capping to body)*	(2)	**AB108054**

'A' POST TRIM-LOWER & UPPER

'A; Post trim is supplied in pairs.

'A' Post Vent Trim-Lower (RHD); *Vinyl trim, located at side of front footwell.*		
Black - Pair	(1)	**XKC3154PA**
Beige - Pair	(1)	**XKC3154AA**
Blue - Pair	(1)	**XKC3590JJ**
Tan - Pair	(1)	**XKC3590AM**
Screw	(6)	**575937**
'A' Post Vent Trim-Lower (LHD); *Vinyl trim, located at side of front footwell.*		
Black - Pair	(1)	**YKC3159PA**
Beige - Pair	(1)	**YKC1761AA**
Blue - Pair	(1)	**XKC3595JJ**
Tan - Pair	(1)	**XKC3595AM**
Screw	(6)	**575937**
'A' Post Trim-Upper (RHD & LHD); *Plastic trim, dash to top of windscreen frame.*		
Black		
Rh	(1)	**WKC491PA**
Lh	(1)	**WKC481PA**
Grey		
Rh	(1)	**WKC491LG**
Lh	(1)	**WKC481LG**
Seal-Lower		
Rh	(1)	**ZKC2104**
Lh	(1)	**ZKC2103**
Screw-Self Tapping	(4)	**AB606051**
Locknut	(4)	**GHF1021**

'A' POST LOWER TRIM IS AVAILABLE IN BLACK, BEIGE, BLUE & TAN.

TO ORDER: 01522 568000
www.rimmerbros.co.uk

Seat Frame/Runner & Fittings

Description	Qty Req.	Part No.
SEAT FRAME & FITTINGS		
Seat Frame (Bare)		
Rh	(1)	**WKC350**
Lh	(1)	**WKC351**
Repair Kit-Seat Frame *For RH or LH Seat Frame Sections to repair & strengthen seat frame, where it usually breaks.*	(2)	**RB7272**
Sensor Pad-'Seat Belt Warning' *Compression pad-optional fitting.*	(1)	**UKC6338**
Base Diaphragm	(2)	**XKC320**
Hook *(Diaphragm retaining)*	(16)	**612261**
Squab Strap Kit	(2)	**RB7257**
Spring Roller *(Headrest)*	(2)	**ZKC1271**
Lever *(Seat Recline)*	(2)	**717105**
Screw	(2)	**PMP308**
Washer-Spring	(2)	**WL205**
Escutcheon *(Black)*	(2)	**YKC211PA**
Side Cover/Trim *(Sold in pairs);*		
Right Hand Seat -		
Black *(Pr)*	(1)	**RB7266Black**
Beige *(Pr)*	(1)	**RB7266Beige**
Blue *(Pr)*	(1)	**RB7266Blue**
Tan *(Pr)*	(1)	**RB7266Tan**
Left Hand Seat -		
Black *(Pr)*	(1)	**RB7326Black**
Beige *(Pr)*	(1)	**RB7326Beige**
Blue *(Pr)*	(1)	**RB7326Blue**
Tan *(Pr)*	(1)	**RB7326Tan**
Screw	(12)	**YZ3103**
SEAT RUNNER & FITTINGS		
Release Lever	(2)	**ZKC141**
Seat Runner Assembly		
Rh	(2)	**XKC218**
Lh	(2)	**XKC217**
Screw-Allen/Star Drive *(Front-long)*	(4)	**SS108351**
Washer/Spacer	(2)	**ZKC221**
'Stop'-Seat Runner	(2)	**ZKC1620**
Screw-Allen/Star Drive *(Short)* *For ZKC1620.*	(2)	**YKC3356**
Washer/Spacer	(2)	**ZKC221**
Washer	(2)	**WP19**
Screw-Special *Seat runner to seat frame.*	(12)	**SS106201**
'Star Washer'	(12)	**WF106001**
Screw-Allen/Star Drive *(Short)*	(2)	**YKC3356**
Washer/Spacer	(2)	**ZKC221**
Washer	(2)	**WM809**

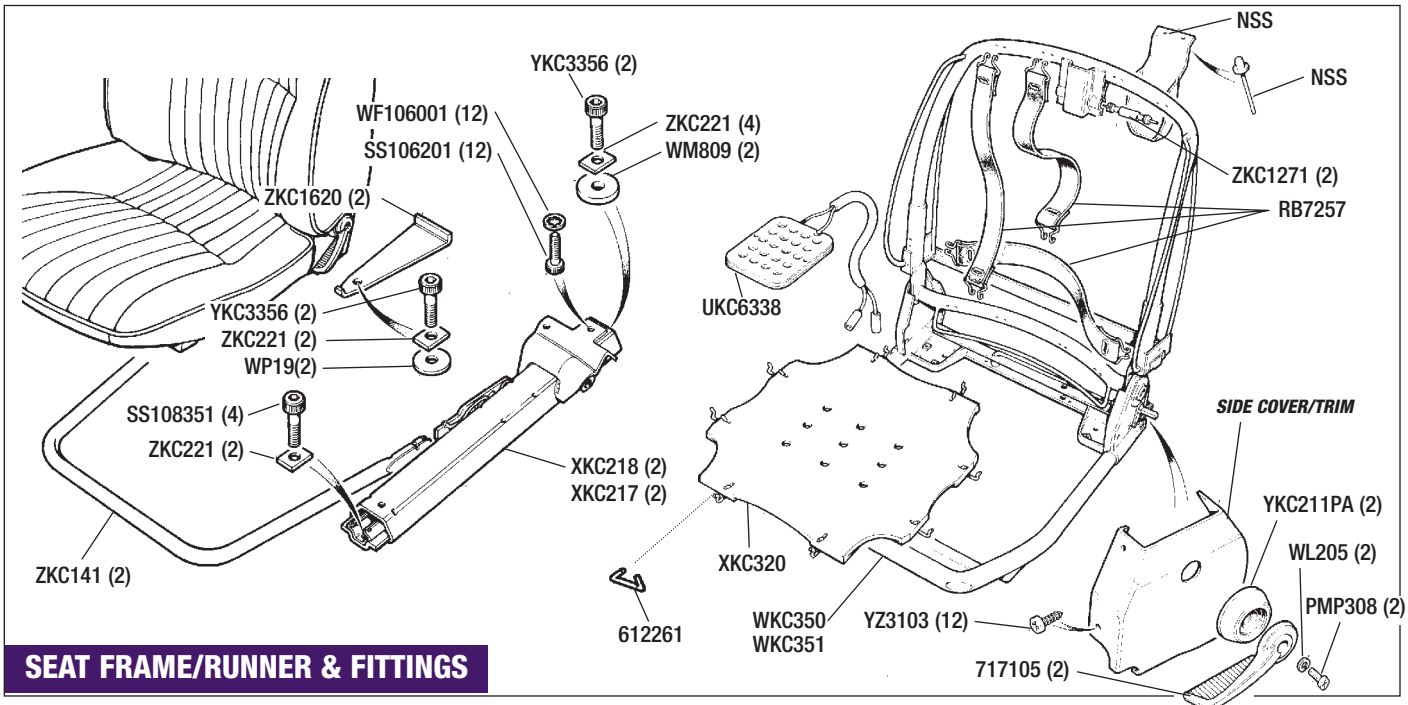

SEAT FRAME/RUNNER & FITTINGS

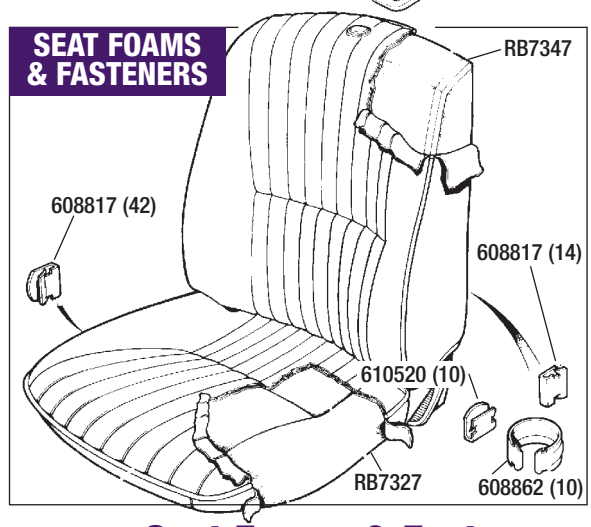

Seat Foams & Fasteners

Seat Squab Foam *(Back)*	(2)	**RB7347**
Seat Cushion Foam *(Base)*	(2)	**RB7327**
Trim Clips;		
Cushion Cover to frame *21 per seat.*	(42)	**608817**
Squab Cover to frame *7 per seat.*	(14)	**608817**
Squab Cover to frame *(Lower)* *5 per seat.*	(10)	**610520**
Cushion Cover to frame *5 per seat.*	(10)	**608862**
Trim Adhesive		
1 Litre Tin	(a/r)	**RX1353**
500ml Aerosol	(a/r)	**RX1353A**

TR7 SEAT COVERS

(Original and Re-manufactured)

During its period of manufacture, the TR7 was supplied with a variety of seat trim - both in material and pattern, and the changeover periods are not very well documented.

ORIGINAL SEAT COVER SPECIFICATION

The most popular original seat trim specification ranged mainly from a plain 'Ribbed Velour' (and sometimes plain Vinyl) in Black & Beige for early vehicles, to vinyl covers with a 'checked' cloth insert (Black with a Red check insert, Black with Green check, Tan with Tan, & Blue with Blue), and for late European TR7's and TR8's, a plain 'Velour' type material in Tan or Blue. There were a few other trim combinations (for export markets), such as Chestnut, Emerald Green, Grey etc, but these trim colours were not fitted in great numbers, and so the likelihood of finding original covers is virtually nil.

AVAILABILITY OF ORIGINAL COVERS

For those people who wish to use nothing other than original factory trim, we do have limited stocks of certain seat covers in plain 'Ribbed Velour' (and plain vinyl) in Black & Beige, vinyl covers with check cloth inserts in Black with Red check and Black with Green, and a few plain 'Velour' covers. Please refer to current price guide or phone for availability.

RE-MANUFACTURED SEAT COVERS

To overcome the supply situation, we have re-manufactured TR7 seat covers in Blue with Blue check and Tan with Tan check and they are virtually identical to the original upholstery (supplied in car sets only). As an alternative to our Blue & Tan check, we also offer Black vinyl covers with an alternative Black Cloth insert, and plain vinyl covers with vertical pleats in Black, Beige, Blue & Tan.For that real touch of luxury - consider Leather covers in Black, Blue or Tan. (Note: Beige leather covers are supplied in a lighter shade - 'Biscuit', which is only available in our complete Interior Trim Kits.

We urge you to fit covers in car sets, as it is difficult to colour match seat covers that have probably faded after many years of use!

UPGRADE TO THE LATER TRIM SPECIFICATION

If we are unable to offer you the original factory trim covers that you require in sets (eg; Red or Green check), then why not consider a colour change and/or bring your early TR7 trim up to the later model specification by fitting one of our comprehensive Interior re-trim kits which include seat covers, headrest trim, door trim panels, armrests, interior trim panels, carpets etc.

We have kits available for both Convertible & Coupe models (covering manual & automatics, RHD & LHD), and they come in a choice of 5 trim colours; Black, Beige, Biscuit, Blue and Tan, with additional Leather options.

For full details (and photograph) of our Interior Trim Kits please refer to page 101 & 102.

Special note-Door trim panels

Due to a small internal modification to the door frame to accommodate the later type square locking knob door trim panel, it is not possible to fit the late type door trim panels to the early type doors (round locking knob), unless a recess is fabricated.

PARTS LISTINGS & PART NUMBERS

We are a company dedicated to preserving the Triumph marque, and to that end we will endeavour, wherever possible, to reintroduce interior trim items that are currently unobtainable.

To help you identify the trim fitted to your vehicle, we have listed the most popular (original) TR7 seat trim, as well as the trim covers that we have had re-manufactured, and wherever possible we have utilised the original BL factory part numbering/colour identification system.

We strongly recommend you fit all items of trim in pairs or vehicle sets, to ensure a colour match.

RE-TRIM YOUR TR7 WITH ONE OF OUR COMPREHENSIVE TRIM KITS. VEHICLE SHOWN IS TRIMMED IN BISCUIT LEATHER - SEE PAGE 101/102. STEERING WHEEL IS TR8 (PKC1295) - SEE PAGE 64.

TO ORDER: 01522 568000
www.rimmerbros.co.uk

Description | Qty Req. | Part No.

Seat Covers & Kits

*Although we can supply some seat trim covers individually, we **strongly recommend** that seat trim is fitted in **vehicle sets**, to ensure colour match. We also suggest that you check the condition of the seat frame/foam/diaphragm /straps etc.*

ORIGINAL SEAT TRIM COVERS DESIGN & MATERIAL

BLACK & BEIGE 'RIBBED VELOUR' SEAT COVERS, (WITH VERTICAL PLEATS).

Original

RIBBED VELOUR WITH VERTICAL PLEATS

Original plain velour material, fitted to vehicles 1976-1977.

INDIVIDUAL COVERS *See Photo.*

Seat Cushion Cover *(Base);*

Black Velour	(2)	**XKC1566PA**
Beige Velour	(2)	**XKC1566AA**

Seat Squab Cover *(Back);*

Black Velour	(2)	**XKC1564PA**
Beige Velour	(2)	**XKC1564AA**

BLACK & BEIGE PLAIN VINYL SEAT COVERS, (WITH VERTICAL PLEATS).

Original

VINYL WITH VERTICAL PLEATS

Original plain vinyl material, fitted to vehicles 1976-1977.

INDIVIDUAL COVERS *See Photo.*

Seat Cushion Cover *(Base);*

Black Vinyl	(2)	**XKC1565PA**
Beige Vinyl	(2)	**XKC1565AA**

Seat Squab Cover *(Back);*

Black Vinyl	(2)	**XKC1563PA**
Beige Vinyl	(2)	**XKC1563AA**

PHOTO SHOWS VINYL WITH CLOTH CHECK INSERT SEAT COVERS; ORIGINAL BLACK WITH RED CHECK & BLACK WITH GREEN CHECK, AND NEW RE-MANUFACTURED BLUE WITH BLUE CHECK & TAN WITH TAN CHECK.

Original

VINYL WITH CLOTH CHECK INSERT

Original & New Re-manufactured Vinyl material with Cloth Check Insert. Red & Green check fitted to vehicles 1977-1978/79. Blue & Tan check fitted to vehicles 1979/80 onwards.

INDIVIDUAL COVERS *See Photo.*

Seat Cushion Cover *(Base);*

Black with Red Check	(1)	**XKC2814RA**
Black with Green Check	(1)	**XKC2814RB**
Blue with Blue Check	(1)	**XKC3728RH**
Tan with Tan Check	(1)	**XKC3728RG**

Seat Squab Cover *(Back);*

Black with Red Check	(1)	**XKC2813RA**
Black with Green Check	(1)	**XKC2813RB**
Blue with Blue Check	(1)	**XKC3730RH**
Tan with Tan Check	(1)	**XKC3730RG**

SEAT TRIM KIT RB7366TAN & RB7366BLUE; VINYL WITH CLOTH CHECK INSERT

SEAT TRIM KIT *See Photo.*
Kit includes 2 Base & 2 Back Covers.

Seat Trim Cover Kit;

Blue with Blue Check	(1)	**RB7366Blue**
Tan with Tan Check	(1)	**RB7366Tan**

Original

'PLEATED' VELOUR

Original Velour type material Fitted to some LHD European vehicles & TR8's.

INDIVIDUAL COVERS

Seat Cushion Cover *(Base);*

Blue	(1)	**XKC3734JJ**
Tan	(1)	**XKC3734AM**

Seat Squab Cover *(Back);*

Blue	(1)	**XKC3735JJ**
Tan	(1)	**XKC3735AM**

ALTERNATIVE SEAT TRIM COVERS DESIGN & MATERIAL

SEAT TRIM KIT RB7537. FULL CLOTH FACE WITH PLEATS.

Alternative

FULL CLOTH FACE WITH PLEATS

Available in Black only. New, Re-manufactured Brushed Ribbed Nylon material with Vertical Pleats and Horizontal stitch lines. This kit offers an attractive cloth alternative to plain vinyl (vertical pleat) covers. Supplied in vehicle sets only.

SEAT TRIM KIT
See Photo. Kit includes 2 Base & 2 Back Covers.

Seat Trim Cover Kit;

Black Full Cloth material	(1)	**RB7537**

Headrest covers not included. If changing colour, please refer to Headrests & Covers for black headrests.

TRIM ADHESIVE

Trim Adhesive

1 Litre Tin	(a/r)	**RX1353**
500ml Aerosol	(a/r)	**RX1353A**

Description Qty Req. Part No.

VINYL WITH BLACK CLOTH INSERT

Available in Black only.
New, Re-manufactured Black Vinyl material with Black Cloth Insert. This kit offers an attractive alternative to the standard Black (Ribbed) seat cover material. Supplied in vehicle sets only.

SEAT TRIM KIT
See Photo. Kit includes 2 Base & 2 Back Covers.

Seat Trim Cover Kit;
Black with Black Cloth insert (1) **RB7350**
Headrest covers not included. If changing colour, please refer to Headrests & Covers for black headrests.

VINYL WITH VERTICAL PLEATS

New, Re-manufactured Plain Vinyl material with Vertical Pleats. Similar in design to Original Trim. Supplied in vehicle sets only.

SEAT TRIM KIT
See Photo. Kit includes 2 Base & 2 Back Covers.

Seat Trim Cover Kit;

Black Vinyl	(1)	**RB7373Black**
Beige Vinyl	(1)	**RB7373Beige**
Blue Vinyl	(1)	**RB7373Blue**
Tan Vinyl	(1)	**RB7373Tan**

Headrest covers not included. If changing colour, please refer to Headrests & Covers.

Description Qty Req. Part No.

NOTE, LEATHER SEAT COVER KITS ARE AVAILABLE FOR BOTH EARLY & LATE MODELS AND COME COMPLETE WITH HEADREST COVERS.

Alternative

LEATHER WITH VERTICAL PLEATS

This Leather faced seat cover kit offers a luxurious alternative to the standard covers. Supplied in vehicle sets only.

SEAT TRIM KIT
See Photo.
Kit inc 2 Base & Back Covers & headrest covers.

Seat Trim Cover Kit *(Small type headrest)*;

Black Leather	(1)	**RB7384Black**
Beige (Biscuit) Leather*		***See Special Note***
Blue Leather	(1)	**RB7384Blue**
Tan Leather	(1)	**RB7384Tan**

Seat Trim Cover Kit *(Large 'D' type headrest)*;

Black Leather	(1)	**RB7253Black**
Beige (Biscuit) Leather*	(1)	***See Special Note***
Blue Leather	(1)	**RB7253Blue**
Tan Leather	(1)	**RB7253Tan**
Leather Care Cream *(300ml)*	(a/r)	**RX1320**

Cleans and preserves.

Special Note; Beige (Biscuit) Leather Covers
The shade of our Beige Leather trim can be more accurately described as a 'Light Biscuit' colour (see cockpit/interior photo on page 106), for this reason our Biscuit Leather faced seat covers are only available in one of our interior trim kits (please refer to Complete Interior Trim Kits), where the colour shade of seat covers, door trim panels, bulkhead trim etc, will all match.

Description Qty Req. Part No.

Headrests & Covers

Important Note; *Headrest assemblies are sold individually*
Headrest covers are sold In Pairs.

EARLY TYPE - VINYL

Small type
All vehicles to VIN 402001. See Photo above.

Headrests *(Each)*;

Black	(2)	**YKC3169PA**
Beige	(2)	**YKC581AA**
Blue	(2)	**YKC4249JJ**
Tan	(2)	**YKC4249AM**

Headrest Covers *(Pair)*;

Black	(1)	**YKC3169PACVR**
Beige	(1)	**917954CVR**
Blue	(1)	**YKC4249JJCVR**
Tan	(1)	**YKC4249AMCVR**

LATE TYPE - VINYL

Large type - 'D' shape
All vehicles from VIN 402001. See Photo above.

Headrests *(Each)*;

Black	(2)	**XKC3898PA**
Beige	(2)	**XKC3898AA**
Blue	(2)	**XKC3898JJ**
Tan	(2)	**XKC3898AM**

Headrest Covers *(Pair)*;

Black	(1)	**XKC3898PACVR**
Beige	(1)	**XKC3898AACVR**
Blue	(1)	**XKC3898JJCVR**
Tan	(1)	**XKC3898AMCVR**

LEATHER

Not Supplied Separately **N.S.S.**
Available only in Seat Cover Sets.

TRIM ADHESIVE

Trim Adhesive;

1 Litre Tin	(a/r)	**RX1353**
500ml Aerosol	(a/r)	**RX1353A**

Seat Over-Covers

Tailored Seat 'Over-Covers';
Sold in pairs only, the covers (complete with Triumph logo) are manufactured from a quality canvas type material. They are neatly tailored and designed to protect your seat trim covers.

Black (pair)	(1)	**RB7099Black**
Grey (pair)	(1)	**RB7099Grey**

PROTECT YOUR SEAT TRIM WITH OUR TAILORED SEAT 'OVER-COVERS'.
AVAILABLE IN BLACK & GREY.

TO ORDER: 01522 568000
www.rimmerbros.co.uk

Description | Qty Req. | Part No.

SEAT BELT KIT - RB7355.
OUR REPLACEMENT SEAT BELT KITS FIT BOTH CONVERTIBLE & COUPE MODELS.

Seat Belts & Fittings

Original & Replacement Seat Belts

AVAILABILITY OF ORIGINAL SEAT BELTS
Inertia reel units for the Convertible are no longer available. We currently hold limited stocks of inertia reel units for the early Coupe (vertical mounted), and also original seat mounted belt stalks (which fit all models). Once these stocks are exhausted, we recommend that you fit a pair of our replacement seat belt kits.

REPLACEMENT SEAT BELTS
Our universal mounting seat belt kits are suitable for all Convertible and Coupe models.
The kits (per seat), comprise of an inertia reel unit, stalk and fittings. Our kits must be installed as a seat set, because the belt fastener (buckle) will not fit the original type seat mounted stalk since the fittings differ. For this reason (and for appearance's sake) we recommend fitting our seat belt kits as a car set (2 kits).

SEAT BELT KIT *(Convertible & Coupe)*

Seat Belt Kit *(2 per car)*
Replacement type. Fits All Models, see photo.
Comprises 1 inertia reel belt, 1 stalk & fittings.
Stalks can be floor mounted.
Note: 2 lengths of stalk are offered. The 15cm stalk should be used where the seats are normally positioned fully back. The 30cm stalk offers more convenient useage if the seats are usually positioned forward.
Recommended to fit in car sets.

With 15cm Stalk	(2)	**RB7355**
With 30cm Stalk	(2)	**RB7355A**

SEAT BELT - INERTIA REEL *(Coupe only)*

Seat Belt - Inertia Reel *(2 per car)*	(2)	**RB7275**

Original Factory type. *Fits all Coupe models to 1978 with vertical mounting. Comprises 1 inertia reel belt only.*

SEAT BELT FITTINGS
For original specification belts.

Seat Belt Stalk *(2 per car)*	(2)	**RB7378**
Original type seat mounted stalk, fits all models.		
Belt Retaining Clip	(2)	**YKC1343**
Screw *(Clip locating)*	(4)	**AB610051**
Guide-Seat Belt		
Rh	(1)	**XKC2718**
Lh	(1)	**XKC2717**
Locating Plate		
Rh	(1)	**YKC3575**
Lh	(1)	**YKC3576**

Description | Qty Req. | Part No.

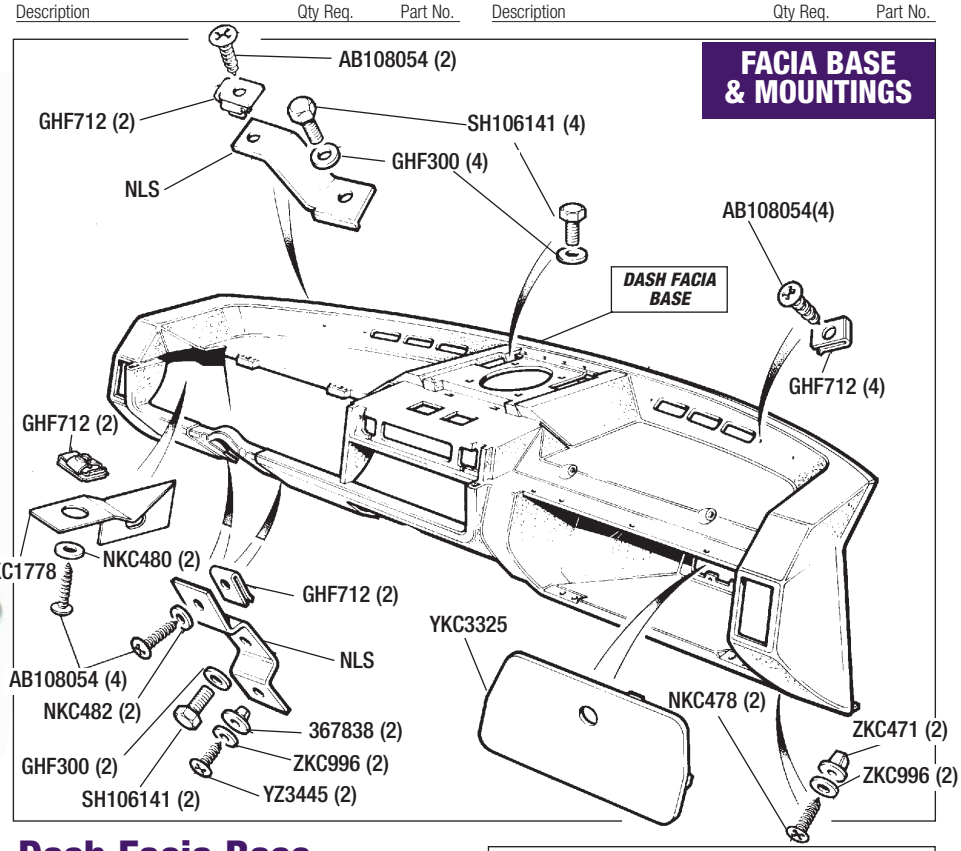

Dash Facia Base & Fittings

FACIA BASE & MOUNTINGS

Dash Facia Base *(Bare);*		
Black *(RHD to VIN 402021)*	(1)	**WKC381PA**
Grey *(RHD to VIN 402021)*	(1)	**WKC381LG**
Grey *(RHD from VIN 402021)*	(1)	**WKC5163LG**
Black *(LHD)*	(1)	**WKC382PA**
Grey *(LHD)*	(1)	**WKC5164LG**
Cover *(Relay/fuse board)*	(1)	**YKC3325**
Setscrew	(4)	**SH106141**
Washer-Flat	(4)	**GHF300**
Spirenut	(2)	**GHF712**
Support Bracket *(Facia)*	(1)	**ZKC1778**
Screw-Self Tapping	(2)	**AB108054**
Spirenut	(2)	**GHF712**
Screw-Self Tapping	(4)	**AB108054**
Washer	(2)	**NKC480**
Washer	(2)	**NKC482**
Spirenut	(2)	**GHF712**
Setscrew	(2)	**SH106141**
Washer	(2)	**GHF300**
Screw-Self Tapping	(2)	**YZ3445**
Washer	(2)	**ZKC996**
Captive Nut	(2)	**ZKC471**
Screw-Self Tapping	(2)	**NKC478**
Washer	(2)	**ZKC996**
Captive Nut	(2)	**ZKC471**
Screw-Self Tapping	(4)	**AB108054**
Spirenut	(4)	**GHF712**

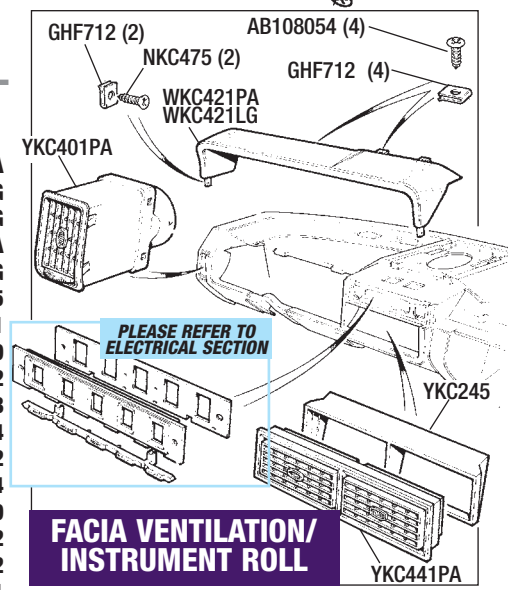

FACIA VENTILATION/INSTRUMENT ROLL
Please refer to ELECTRICAL section for switch facia's.

Vent-Facia End (Rh & Lh) *(Black)*	(2)	**YKC401PA**
Vent-Facia Centre *(Black)*	(1)	**YKC441PA**
Surround *(Air Vent)*	(1)	**YKC245**
Instrument Upper Roll-Black *(RHD)*	(1)	**WKC421PA**
Instrument Upper Roll-Grey *(RHD)*	(1)	**WKC421LG**
Screw-Self Tapping	(4)	**AB108054**
Spire Clip	(4)	**GHF712**
Screw-Self Tapping	(2)	**NKC475**
Spire Clip	(2)	**GHF712**

Dash Facia Base & Fittings *(Con't)*

AIR INTAKE SCOOP

*See **BODY PARTS & FITTINGS** - Bonnet Assembly & Fittings for Illustration.*

Description	Qty Req.	Part No.
Air intake Scoop	(1)	**XKC3604FG**
Re-manufactured in fibreglass, as original. Includes over-centre clips, less rubber seals. Allows fresh air into cockpit & heater system. Fits on bulkhead below bonnet centre louvres in engine compartment.		
Seals-Air Intake Scoop;		
Upper Seal *(Air scoop to bonnet)*		
For Original Scoop	(1)	**YKC1887**
For Fibreglass Scoop	(1)	**YKC1887FG**
Lower Seal *(To bulkhead)*	(1)	**YKC320**
End Grommet	(2)	**YKC3673**
Setscrew* *(Air scoop to bulkhead)*	(2)	**GE106141**
Washer-Spring* *(For GE106141)*	(2)	**WL106001**
Washer-Flat* *(For GE106141)*	(2)	**GHF300**
'Push' Nut* *(For GE106141)*	(2)	**ZKC1984**

**Alternative fittings, Early vehicles only.*

CENTRE CONSOLE/GRILLE/TOP PAD

Description	Qty Req.	Part No.
Centre Console *(Non-air conditioning type);*		
Black	(1)	**YKC1859PA**
Grey *(Vehicles to VIN 402021)*	(1)	**YKC1859LG**
Grey *(Vehicles from VIN 402021)*	(1)	**YKC4545LG**
Lens Cover *(Black)*	(1)	**XKC2902PA**
Lens Cover *(Grey)*	(1)	**XKC2902LG**
Diffuser (Light)	(4)	**ZKC1654**
Seal *(Console to dash)*	(2)	**ZKC440**
Screw-Self Tapping	(4)	**AB108054**
Washer	(2)	**NKC480**
Spire Clip	(6)	**NKC468**
Screw-Self Tapping	(2)	**AB108054**
Washer	(2)	**WP104**
Spire Clip	(2)	**AK606061**
Heater/Air Vent Knobs;		
Vent *(Fresh air)*	(1)	**ZKC1222**
Heat Control	(1)	**ZKC1220**
Fan Speed Control	(1)	**ZKC4011**
Direction Control *(Screen/car)*	(1)	**ZKC1219**
Tray-Radio (Black)	(1)	**XKC981PA**
Used when radio not fitted.		

KNEE PADS

Description	Qty Req.	Part No.
Knee Pad *(Supplied in pairs);*		
Black *(Pair)*	(1)	**YKC3565PA**
Beige *(Pair)*	(1)	**YKC3565AA**
Blue *(Pair)*	(1)	**XKC3612JJ**
Tan *(Pair))*	(1)	**XKC3612AM**
Fastener *(Knee pad)*	(6)	**608511**
Grille *(Radio Speaker);*		
Black	(1)	**XKC2419PA**
Grey	(1)	**XKC2419LG**
'Anchor' Bush *(Radio grille)*	(4)	**629288**
Washer *(For 629288)*	(4)	**629287**
Rubber Mat *(Non slip);*		
Rh	(1)	**YKC1116PA**
Lh	(1)	**YKC1115PA**
Seal *(Facia Front)*	(1)	**ZKC420**
Mesh-Demister Duct	(2)	**ZKC1930**
Screw-Self Tapping	(4)	**NKC366**
Spire Clip	(4)	**GHF712**

CENTRE CONSOLE/GRILLE/TOP PAD

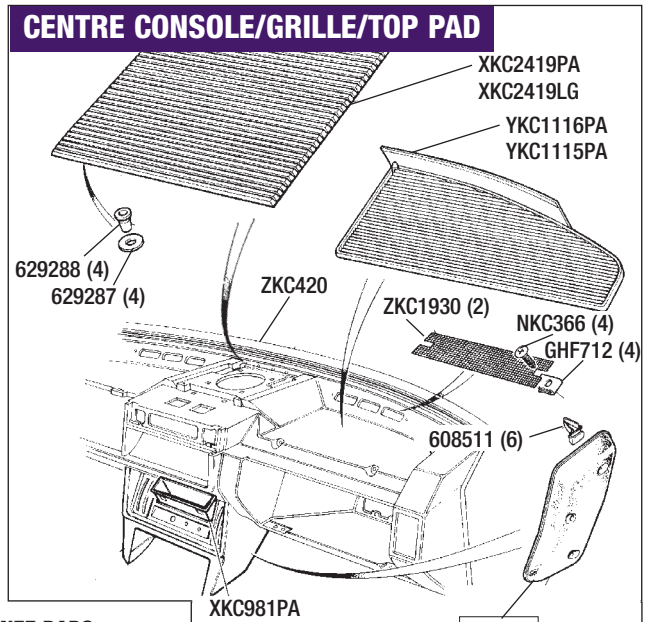

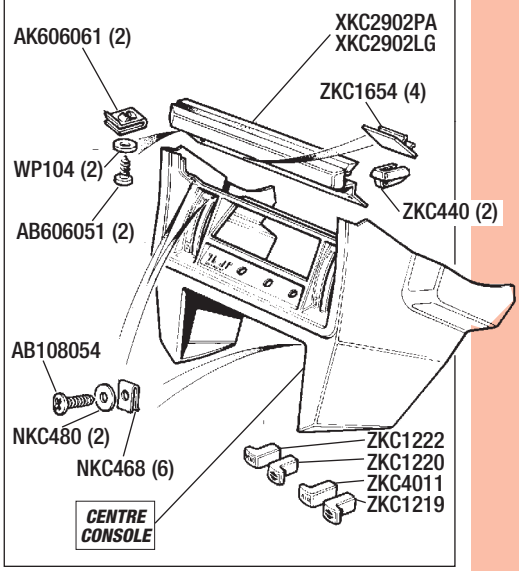

GLOVE BOX FITTINGS

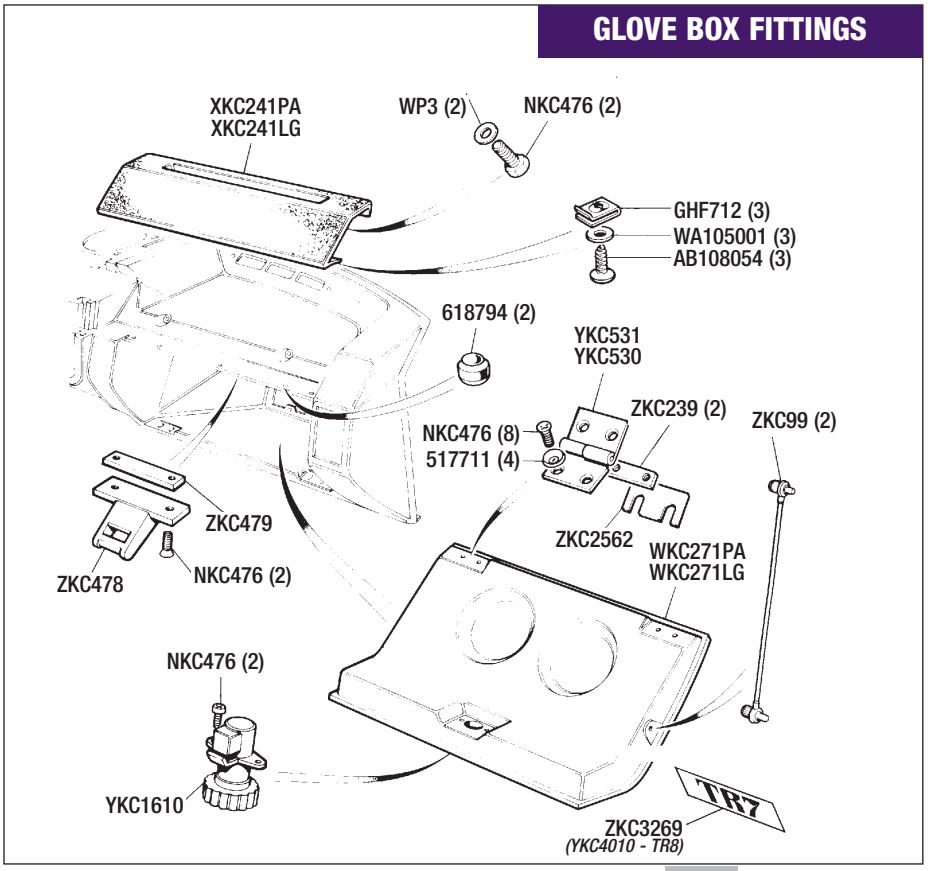

GLOVE BOX & FITTINGS

Description	Qty Req.	Part No.
Glove Box Lid;		
Black	(1)	**WKC271PA**
Grey	(1)	**WKC271LG**
Lock-Glove Box	(1)	**YKC1610**
Screw	(2)	**NKC476**
Hinge;		
Rh	(1)	**YKC531**
Lh	(1)	**YKC530**
Screw *(Special)*	(8)	**NKC476**
Washer *(Special)*	(4)	**517711**
Plate-'Tapped'	(2)	**ZKC239**
Shim *(Use as required)*	(1)	**ZKC2562**
Stay *(Glove box lid)*	(2)	**ZKC99**
'TR7' Decal	(1)	**ZKC3269**
'TR8' Decal	(1)	**YKC4010**
Striker *(Glove box lid)*	(1)	**ZKC478**
Plate-'Tapped'	(1)	**ZKC479**
Screw *(Special)*	(2)	**NKC476**
Buffer	(2)	**618794**
Upper Roll-Glove Box		
Black	(1)	**XKC241PA**
Grey	(1)	**XKC241LG**
Setscrew	(2)	**NKC476**
Washer	(2)	**WP3**
Screw-Self Tapping	(3)	**AB108054**
Washer	(3)	**WA105001**
Spire Clip	(3)	**GHF712**

TO ORDER: 01522 568000
www.rimmerbros.co.uk

Steering Column Covers/ Support

Description	Qty Req.	Part No.
Steering Column Cover-Upper;		
RHD Models *(to VIN 200001)* *Left hand key entry.*	(1)	**XKC591**
RHD/LHD Models *(from VIN 200001)* *Right hand key entry.*		**XKC593**
Steering Column Cover-Lower;		
RHD Models *(to VIN 200001)* *Left hand key entry.*	(1)	**XKC592**
RHD/LHD Models *(from VIN 200001)* *Right hand key entry.*	(1)	**XKC594**
Bolt *(Cover to cover)*	(2)	**AFU1212**
Strap	(1)	**TKC5926**
Support Rail;		
Drivers - RHD	(1)	**XKC3777**
Drivers - LHD	(1)	**XKC3882**
Support Tube	(1)	**YKC83**
Support Stay	(1)	**YKC1750**
Support Tube	(1)	**YKC84**
Support Rail *(Passenger-RHD)*	(1)	**YKC131**
Setscrew	(12)	**SH106141**
Washer	(12)	**GHF300**
Nut-Plain	(4)	**NKC474**

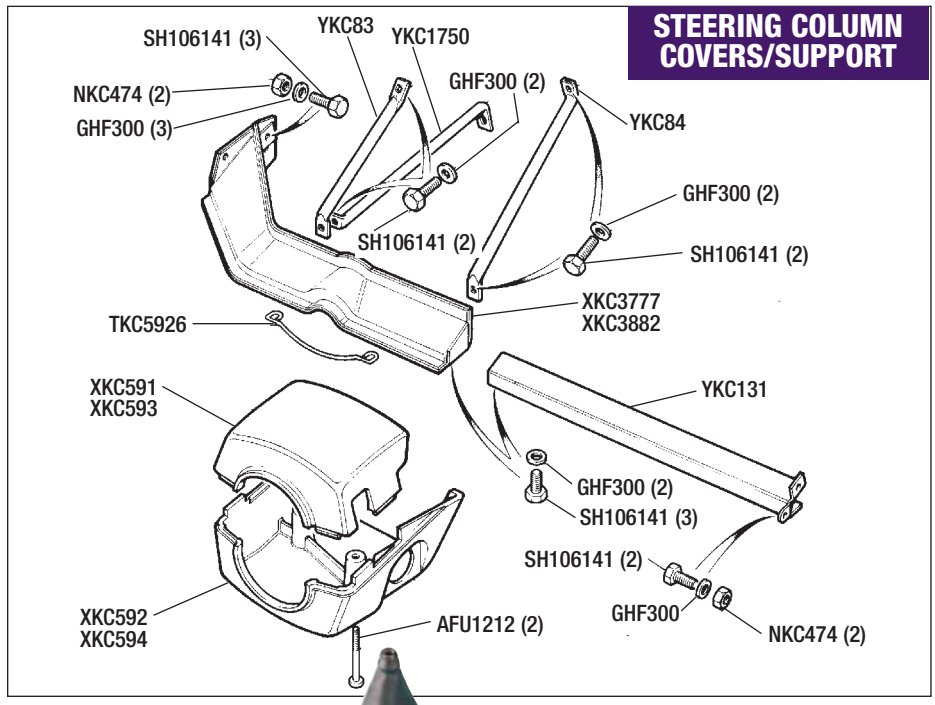

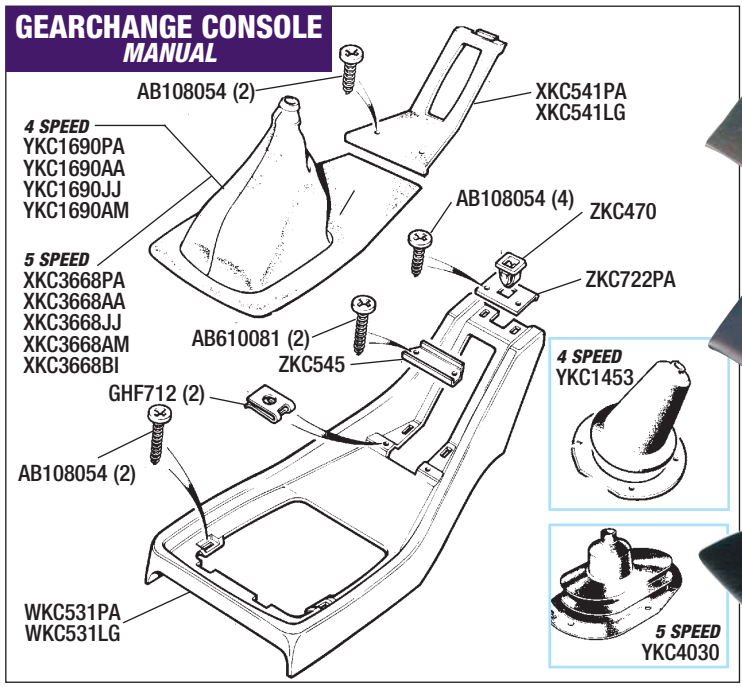

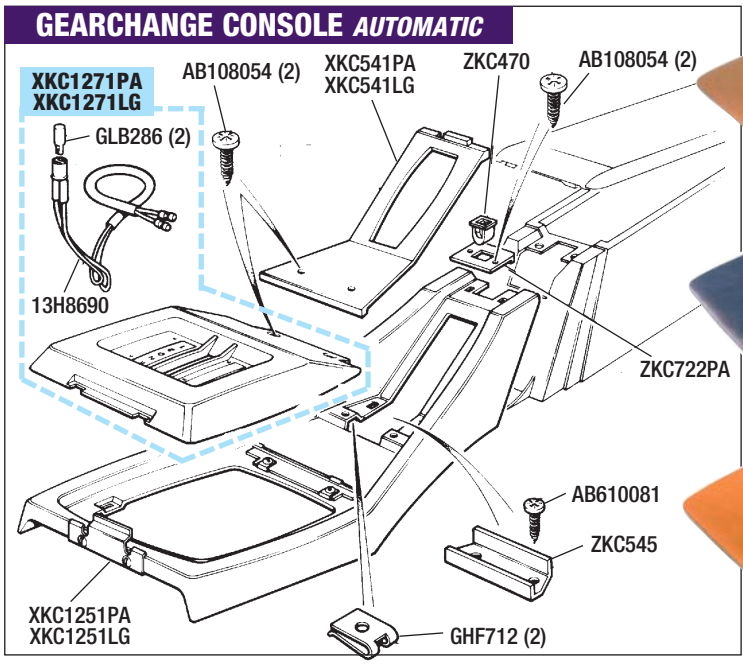

4 SPEED GEAR LEVER GAITERS ARE AVAILABLE IN BLACK, BEIGE, BLUE & TAN.

Gearchange Console

Manual & Automatics

CONSOLE - MANUAL

Console;		
Black	(1)	**WKC531PA**
Grey	(1)	**WKC531LG**
Gaiter-Rubber *(4 Speed)* *See also Transmission & Axles-Gearchange Lever.*	(1)	**YKC1453**
Gaiter-Fabric *(4 Speed);*		
Black	(1)	**YKC1690PA**
Beige	(1)	**YKC1690AA**
Blue	(1)	**YKC1690JJ**
Tan	(1)	**YKC1690AM**
Gaiter-Rubber *(5 Speed)* *See also Transmission & Axles-Gearchange Lever.*	(1)	**YKC4030**
Gaiter-Fabric *(5 Speed);*		
Black	(1)	**XKC3668PA**
Beige	(1)	**XKC3668AA**
Blue	(1)	**XKC3668JJ**
Tan	(1)	**XKC3668AM**
Biscuit	(1)	**XKC3668BI**
Insert Moulding;		
Black	(1)	**XKC541PA**
Grey	(1)	**XKC541LG**
Screw-Self Tapping	(2)	**AB108054**
Screw-Self Tapping	(4)	**AB108054**
Screw-Self Tapping	(2)	**AB610081**
Spire Clip	(2)	**GHF712**
Support Plate	(1)	**ZKC545**
Retaining Plate *(Black)*	(1)	**ZKC722PA**
Catch *(Armrest lid)*	(1)	**ZKC470**

CONSOLE - AUTOMATIC

Console;		
Black	(1)	**XKC1251PA**
Grey	(1)	**XKC1251LG**
Surround-Gear Selector;		
Black	(1)	**XKC1271PA**
Grey	(1)	**XKC1271LG**
Bulb *(Gear select illumination)*	(1)	**GLB286**
Bulb Holder	(1)	**13H8690**
Insert Moulding;		
Black	(1)	**XKC541PA**
Grey	(1)	**XKC541LG**
Screw-Self Tapping	(2)	**AB108054**
Spire Clip	(2)	**GHF712**
Screw-Self Tapping	(2)	**AB610081**
Support Plate	(1)	**ZKC545**
Retaining Plate *(Black)*	(1)	**ZKC722PA**
Catch *(Armrest lid)*	(1)	**ZKC470**

5 SPEED GEAR LEVER GAITERS ARE AVAILABLE IN BLACK, BEIGE, BLUE, TAN & BISCUIT

Description | Qty Req. | Part No.

RENOVATE YOUR TIRED CENTRE ARMREST WITH ONE OF OUR LID RE-TRIM KITS, AVAILABLE IN BLACK, BEIGE, BLUE & TAN.

Centre Armrest & Handbrake Gaiter

(All Models)

Armrest/Glove Box Assembly;		
Black Box/Black Lid	(1)	**XKC1221PA**
Grey Box/Black Lid	(1)	**XKC3913PA**
Grey Box/Blue Lid	(1)	**XKC1221JJ**
Grey Box/Tan Lid	(1)	**XKC1221AM**
Armrest Lid Re-Trim Kit; *Re-covers existing metal lid.*		
Black	(1)	**XKC1201PA**
Beige	(1)	**XKC1201AA**
Blue	(1)	**XKC1201JJ**
Tan	(1)	**XKC1201AM**
Striker	(1)	**GHF1370**
Catch (Armrest lid)	(1)	**ZKC470**
Washer	(2)	**WP20X**
Washer	(2)	**WL104001**
Nut	(2)	**NH104041**
Captive Nut	(2)	**570779**
Spire Clip	(2)	**GHF712**
Screw-Self Tapping	(2)	**AB610081**
Washer	(2)	**WP28**
Spire Clip	(2)	**GHF713**
Handbrake Gaiter;		
Black	(1)	**YKC3166PA**
Beige	(1)	**YKC3166AA**
Blue	(1)	**YKC3166JJ**
Tan	(1)	**YKC3166AM**

SUN VISORS

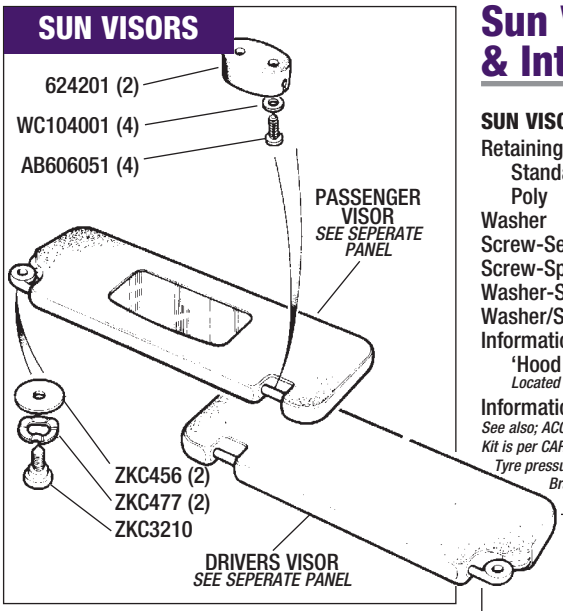

SUN VISOR COLOUR IDENTIFICATION

Convertible

Visor is same colour both sides.

Coupe

Visor is white one side

To match headlining.

Coloured on reverse side

To match interior trim.

Description | Qty Req. | Part No.

CENTRE ARMREST

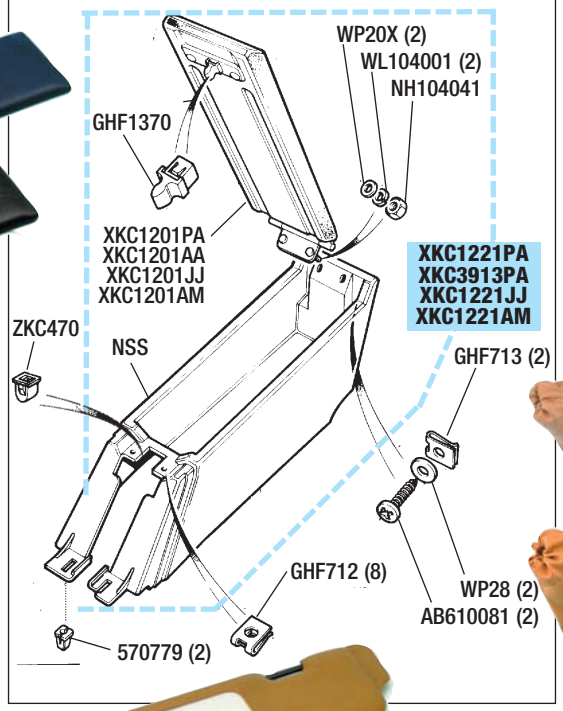

CONVERTIBLE OWNERS, DON'T FORGET TO RENEW THE 'HOOD INSTRUCTION' LABEL.

Sun Visors & Interior Mirror

SUN VISOR MOUNTING

Retaining Rubber-Visor;		
Standard	(2)	**624201**
Poly	(2)	**624201P**
Washer	(4)	**WC104001**
Screw-Self Tapping	(4)	**AB606051**
Screw-Special	(2)	**ZKC3210**
Washer-Special	(2)	**ZKC477**
Washer/Spacer	(2)	**ZKC456**
Information Label- 'Hood Instructions' *(Convertible)* *Located on passenger sun visor.*	(1)	**RB7144**
Information Label Kit	(1)	**RB7091**

See also; ACCESSORIES.

Kit is per CAR & includes 1 of each of the following labels; Tyre pressures, Engine Data, E11, Air Box, Headlamps, Unipart, Brake Data, & Hood instructions. The labels are also available separately.

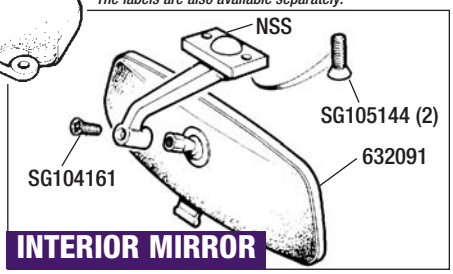

INTERIOR MIRROR

INTERIOR MIRROR

Mirror Head only	(1)	**632091**
Screw *(Mirror head to arm)*	(1)	**SG104161**
Screw *(Mirror mounting)*	(1)	**SG105144**

Description | Qty Req. | Part No.

HANDBRAKE GAITER

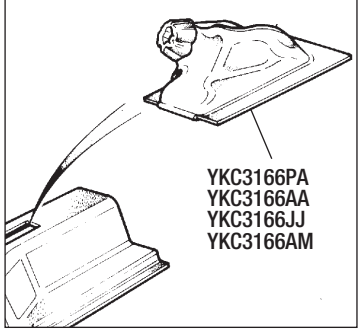

REPLACEMENT HANDBRAKE GAITERS AVAILABLE IN BLACK, BEIGE, BLUE & TAN.

SUN VISORS for RIGHT HAND DRIVE VEHICLES

CONVERTIBLE - RHD

PASSENGERS SIDE *(with mirror)*	
Black	**XKC2700PA**
Blue	**WKC4853JJ**
Tan	**WKC4853AM**
DRIVERS SIDE	
Black	**XKC2704PA**
Blue	**WKC4844JJ**
Tan	**WKC4844AM**

COUPE - RHD

PASSENGERS SIDE *(with mirror)*	
Black/White	**XKC1151NC**
Blue/White	**WKC4869JJ**
Tan/White	**WKC4869AM**
Sebring White	**XKC2701NC**
DRIVERS SIDE	
Black/White	**XKC1821NC**
Blue/White	**WKC4864JJ**
Tan/White	**WKC4864AM**
Sebring White	**XKC2704NC**

SUN VISORS for LEFT HAND DRIVE VEHICLES

CONVERTIBLE - LHD

DRIVERS SIDE	
Black	**XKC2705PA**
Blue	**WKC4843JJ**
Tan	**WKC4843AM**
PASSENGERS SIDE *(with mirror)*	
Black	**XKC2701PA**
Blue	**WKC4854JJ**
Tan	**WKC4854AM**

COUPE - LHD

DRIVERS SIDE	
Black/White	**XKC1822NC**
Blue/White	**WKC4863JJ**
Tan/White	**WKC4863AM**
Sebring White	**XKC2705NC**
PASSENGERS SIDE *(with mirror)*	
Black/White	**XKC1152NC**
Blue/White	**WKC4870JJ**
Tan/White	**WKC4870AM**
Sebring White	**XKC2700NC**

TO ORDER: 01522 568000
www.rimmerbros.co.uk

Windscreen Finishers & Trim (Convertible)

*See also; **EXTERIOR & TRIM** - Body Finishers/ Miscellaneous Trim.* ***Convertible models only.***

Description	Qty Req.	Part No.
Front Edge Screen Finisher	(1)	**YKC3610**
Centre Screen Trim *(Inside car);*		
Black	(1)	**WKC3937PA**
Beige	(1)	**WKC3937AA**
Blue	(1)	**WKC3937JJ**
Tan	(1)	**WKC3937AM**
Rear Edge Screen Finisher;		
Black	(1)	**ZKC1432PA**
Beige	(1)	**ZKC1432AA**
Blue	(1)	**ZKC1432JJ**
Tan	(1)	**ZKC1432AM**
Off White	(1)	**ZKC1432NE**
Capping *(Door seal to screen pillar)*		
Rh	(1)	**YKC3377**
Lh	(1)	**YKC3376**
Rivet (2) *(Capping to pillar)*	(2)	**RU608253**
Side Finisher/Drip Rail; *Windscreen pillar.*		
Rh	(1)	**WKC3950**
Lh	(1)	**WKC3949**
Weatherstrip (Rh or Lh)	(2)	**XKC3848**

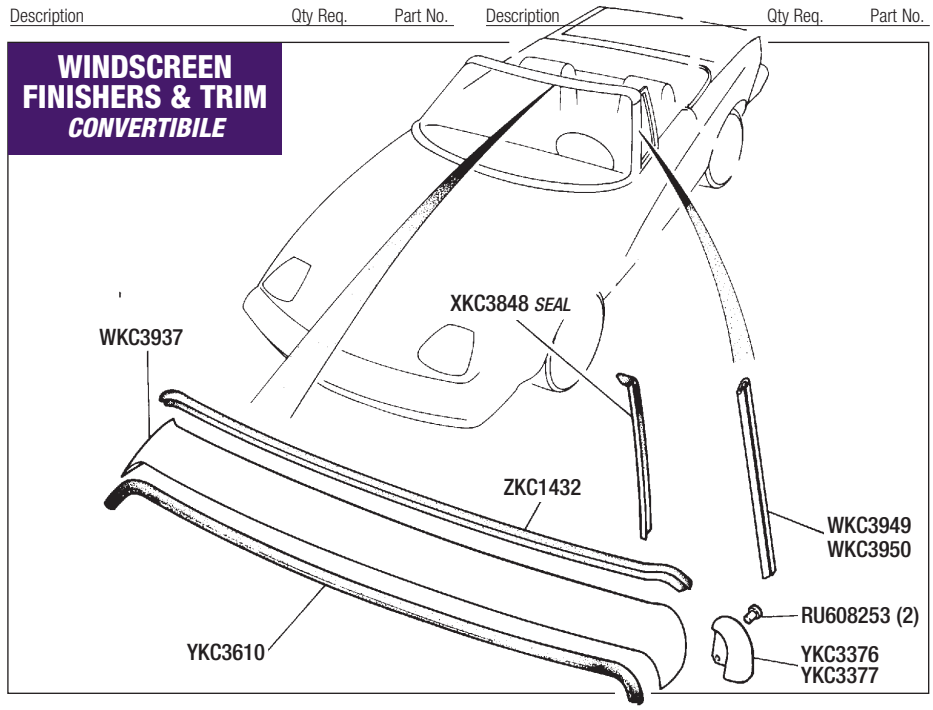

Headlining & Trim (Coupe)

NON -SUNROOF MODELS

Description	Qty Req.	Part No.
Headlining Material;		
Sebring White	(1)	**ZKC1797NC**
Off White	(1)	**ZKC3684NE**
Top Rear Screen Finisher;		
Sebring White	(1)	**ZKC1432NC**
Off White	(1)	**ZKC1432NE**
Tan	(1)	**ZKC1432AM**
Blue	(1)	**ZKC1432JJ**
Black	(1)	**ZKC1432PA**
Insulation Pad	(3)	**XKC3806**
Cross Rail	(4)	**YKC917**
Support Bracket	(2)	**ZKC862**
Screw-Self Tapping	(2)	**AB610051**
Washer	(2)	**WP28**
End Cap *(Cross Rails)*	(8)	**ZKC457**

WITH SUNROOF *(FULL LENGTH TYPE)*

*See also; **SUNROOF** (Factory) on page 123.*

Description	Qty Req.	Part No.
Headlining Material;		
Sebring White	(1)	**ZKC1798NC**
Off White	(1)	**ZKC3685NE**
Top Rear Screen Finisher;		
Sebring White	(1)	**ZKC1432NC**
Off White	(1)	**ZKC1432NE**
Tan	(1)	**ZKC1432AM**
Blue	(1)	**ZKC1432JJ**
Black	(1)	**ZKC1432PA**

Where a 2/3 size sunroof (Tudor Webasto) is fitted, purchase a Non-Sunroof headlining and cut-to-fit.

TRIM ADHESIVE

Description	Qty Req.	Part No.
Trim Adhesive *(1 Litre)*		
1 Litre Tin	(a/r)	**RX1353**
500ml Aerosol	(a/r)	**RX1353A**

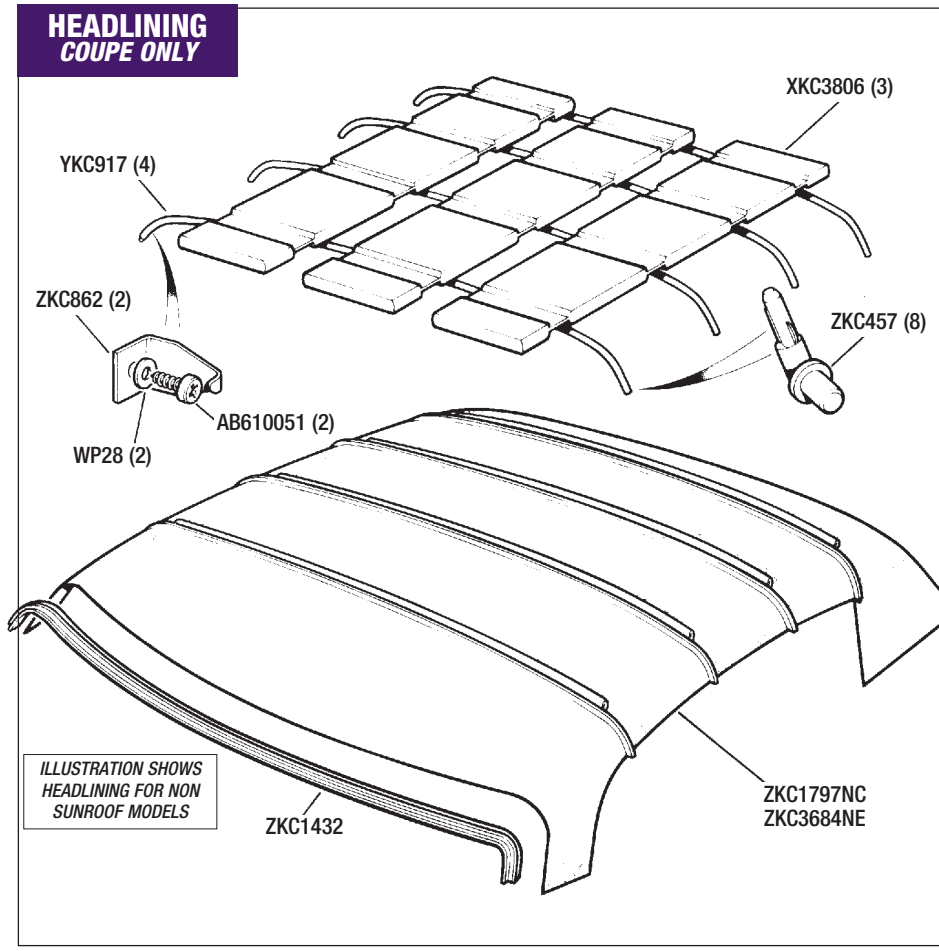

Description Qty Req. Part No. Description Qty Req. Part No. Description Qty Req. Part No.

CARPET SETS
High Quality Tufted Pile or Luxury Wool

A FULL RANGE OF CARPETS FOR THE TR7
Original factory carpet sets for the TR7 have been unavailable for many years. Although it may still be possible to obtain the odd carpet piece for floor or tunnel, achieving a true colour match with your existing carpets (which have probably faded), would be virtually impossible.
We overcame this supply problem in 1982 when we developed a full range of tailored carpet sets for the Convertible & Coupe models, for both RHD & LHD versions.
(Note: Convertible carpet sets also include the carpets for the rear cockpit/hood stowage area).
You can choose between High Quality Tufted Pile carpet, or Luxury Wool. All our carpet sets - which come with large sewn in heel mats and bound leathercloth edges - are available in a large choice of colours.

HIGH QUALITY TUFTED PILE CARPETS
These carpets are made from a high quality tufted pile material, and are excellent value for money. Since 1982 we have supplied countless numbers of these ever popular carpet sets.

LUXURY WOOL CARPETS
For something that little bit special, treat yourself (and your TR7) to a set of our Luxury Wool carpets. They are made from 80% wool with a mixture of 20% nylon (for extra toughness). They may seem a little extravagant, but you really do get what you pay for!

CARPET UNDERFELT KIT
If you are fitting new carpets, or just refitting your own, we recommend you also fit carpet underfelt for improved sound proofing and prolonged carpet life.

OVERMATS
To protect your front footwell carpets, fit a pair of overmats.

ALL OUR HIGH QUALITY CARPET SETS ARE AVAILABLE IN THE FOLLOWING COLOURS

CARPET SETS FOR CONVERTIBLES. *CHOOSE HIGH QUALITY TUFTED PILE CARPETS, OR LUXURY WOOL.*
PHOTO SHOWS LUXURY WOOL CARPET SET RB7387, PLEASE REFER TO LISTINGS FOR FULL INFORMATION AND DETAILS.
CARPET SETS FOR THE CONVERTIBLE ALSO INCLUDE CARPETING FOR THE REAR COCKPIT AREA.
WHY NOT REPLACE THE UNDER FELT, IT WILL HELP TO PROLONG CARPET LIFE.
PHOTO IS NOT INTENDED TO REPRESENT HOW INDIVIDUAL CARPET SECTIONS FIT THE CAR.

Carpet Sets - Convertible

Universal Fitting for RHD & LHD Models
(Including rear cockpit area)

A 13 piece carpet set which includes footwells, floor, sills, centre tunnel, carpet for the rear shelf/wheelarches, and to re-cover the 3 existing (vertical) hood stowage boards.
If your existing boards are in a poor condition, we supply a '3 piece' hood stowage board kit.
Don't forget we also supply a Carpet Underfelt kit.

Colours Available	High Quality Tufted Carpet Set	Luxury Wool Carpet Set
	Part Number	*Part Number*
Black	**RB7412Black**	**RB7387Black**
Beige	**RB7412Beige**	**RB7387Beige**
Green	**RB7412Green**	**RB7387Green**
Red	**RB7412Red**	**RB7387Red**
Blue	**RB7412Blue**	**RB7387Blue**
Brown	**RB7412Brown**	**RB7387Brown**
Grey	**RB7412Grey**	**RB7387Grey**

Hood Stowage Board Kit (1) **RB7330**
(3 bare boards)

Carpet Underfelt Kit (1) **RB7363**

Carpet/Trim Adhesive
1 Litre Tin (a/r) **RX1353**
500ml Aerosol (ar) **RX1353A**

TO ORDER: 01522 568000
www.rimmerbros.co.uk

Description Qty Req. Part No. Description Qty Req. Part No. Description Qty Req. Part No.

Carpet Sets - Coupe

Universal Fitting for RHD & LHD Models

A 7 piece carpet set that includes footwells, floor, sills and centre tunnel.
Don't forget we also supply a Carpet Underfelt Kit.

Colours Available	High Quality Tufted Carpet Set	Luxury Wool Carpet Set
	Part Number	*Part Number*
Black	**RB7418Black**	**RB7397Black**
Beige	**RB7418Beige**	**RB7397Beige**
Green	**RB7418Green**	**RB7397Green**
Red	**RB7418Red**	**RB7397Red**
Blue	**RB7418Blue**	**RB7397Blue**
Brown	**RB7418Brown**	**RB7397Brown**
Grey	**RB7418Grey**	**RB7397Grey**

OUR CARPET UNDERFELT KITS NOT ONLY HELP TO IMPROVE SOUNDPROOFING, BUT ALSO HELP TO PROLONG THE LIFE OF YOUR NEW CARPETS.
ORDER KIT NO. RB7363 FOR CONVERTIBLES AND COUPES.

Carpet Underfelt Kit	(1)	**RB7363**
Carpet/Trim Adhesive		
1 Litre Tin	(a/r)	**RX1353**
500ml Aerosol	(a/r)	**RX1353A**

CARPET SETS FOR COUPES. *CHOOSE HIGH QUALITY TUFTED PILE CARPETS, OR LUXURY WOOL.*
PHOTO SHOWS LUXURY WOOL CARPET SET RB7397BROWN, PLEASE REFER TO LISTINGS FOR FULL INFORMATION AND DETAILS. WHY NOT REPLACE THE UNDER FELT, IT WILL HELP TO PROLONG CARPET LIFE.
PHOTO IS NOT INTENDED TO REPRESENT HOW INDIVIDUAL CARPET SECTIONS FIT THE CAR.

FIT OUR TAILORED FOOTWELL OVERMATS (WITH SEWN-IN TR7 EMBLEM) TO PROTECT YOUR NEW CARPETS. AVAILABLE IN BLACK, BEIGE, BLUE & GREY.

Footwell Overmats

TR7 Tailored Overmats;
Made from a Tough Luxury 'Velour' type material, with sewn-in emblem. Also available for TR8 - See 174.
RHD & LHD Vehicles

Black (Pr)	(1)	**RB7289Black**
Beige (Pr)	(1)	**RB7289Beige**
Blue (Pr)	(1)	**RB7289Blue**
Grey (Pr)	(1)	**RB7289Grey**

Rubber Overmats;
Tough Rubber Mats, supplied in pairs.

Black Rubber (Pr)	(1)	**RB7289BR**

Description	Qty Req.	Part No.

CONVERTIBLE

Rear Bulkhead/Shelf & Trim

Convertible models only.
Please refer to Carpet sets for Rear Cockpit Carpets.

1 Rear Bulkhead Trim Panel;		
Black	(1)	**WKC3297PA**
Beige	(1)	**WKC3297AA**
Blue	(1)	**WKC4624JJ**
Tan	(1)	**WKC4624AM**
Trim Fasteners *(Bulkhead panel);*		
Pop Rivet	(3)	**713531**
Body Stud	(3)	**713511**
Ring/Washer	(3)	**WC705051**
Washer	(3)	**WP4**
Screw-Self Tapping	(4)	**AB108054**
Cup Washer	(4)	**517711**
Bracket	(2)	**ZKC3548**
Spire Clip	(2)	**GHF712**
Screw-Self Tapping	(2)	**AB610081**
Washer	(2)	**WA105001**
Spire Clip	(2)	**GHF713**
2 Rear Deck Inner Trim Material;		
A strip of vinyl material. Supplied in pairs.		
Black (pair)	(1)	**XKC3210PA**
Beige (pair)	(1)	**XKC3210AA**
Blue (pair)	(1)	**XKC3764JJ**
Tan (pair)	(1)	**XKC3764AM**
Trim Fasteners *(Inner trim);*		
Screw-Self Tapping	(8)	**AD608084**
Cup Washer	(8)	**517711**
3 Carpet-Wheel Arch*		
Rh	(-)	**N.S.S.**
Lh	(-)	**N.S.S.**
4 Carpet-Rear Deck/Shelf*	(-)	**N.S.S.**
**Included in Full Carpet Set for Convertible.*		
Trim Fasteners *(Rear deck);*		
Bracket		
Rh	(1)	**YKC2940/1**
Lh	(1)	**YKC2940/2**
Pop Rivet	(4)	**RA608236**
Washer	(4)	**WC705051**
Rear Cockpit Area;		
5 Carpet Material* (Rh)	(-)	**N.S.S.**
6 Carpet Material* (Centre)	(-)	**N.S.S.**
7 Carpet Material* (Lh)	(-)	**N.S.S.**
**Carpet material only (not boards) included in Full Carpet Set for Convertible.*		
Trim Fasteners;		
Pop Rivet	(2)	**713531**
Body Stud	(2)	**713511**
Screw-self Tapping (15)	(15)	**AB108054**
8 Hood Stowage Board Kit	(1)	**RB7330**
Includes 3 bare boards. NOT included in Full Carpet Set. See also; Carpet Sets-Convertible.		
TRIM ADHESIVE		
1 Litre Tin	(a/r)	**RX1353**
500ml Aerosol	(a/r)	**RX1353A**

Sound Insulation Pads

Convertible Models specific.
See page 118 also.

Transmission Tunnel	(1)	**XKC2931**
Rear bulkhead		
Vertical	(1)	**WKC3308**
Top	(1)	**YKC3632**
Side Panel	(2)	**ZKC3296**
Corner Panel	(2)	**YKC3823**
Centre Panel	(2)	**ZKC3736**

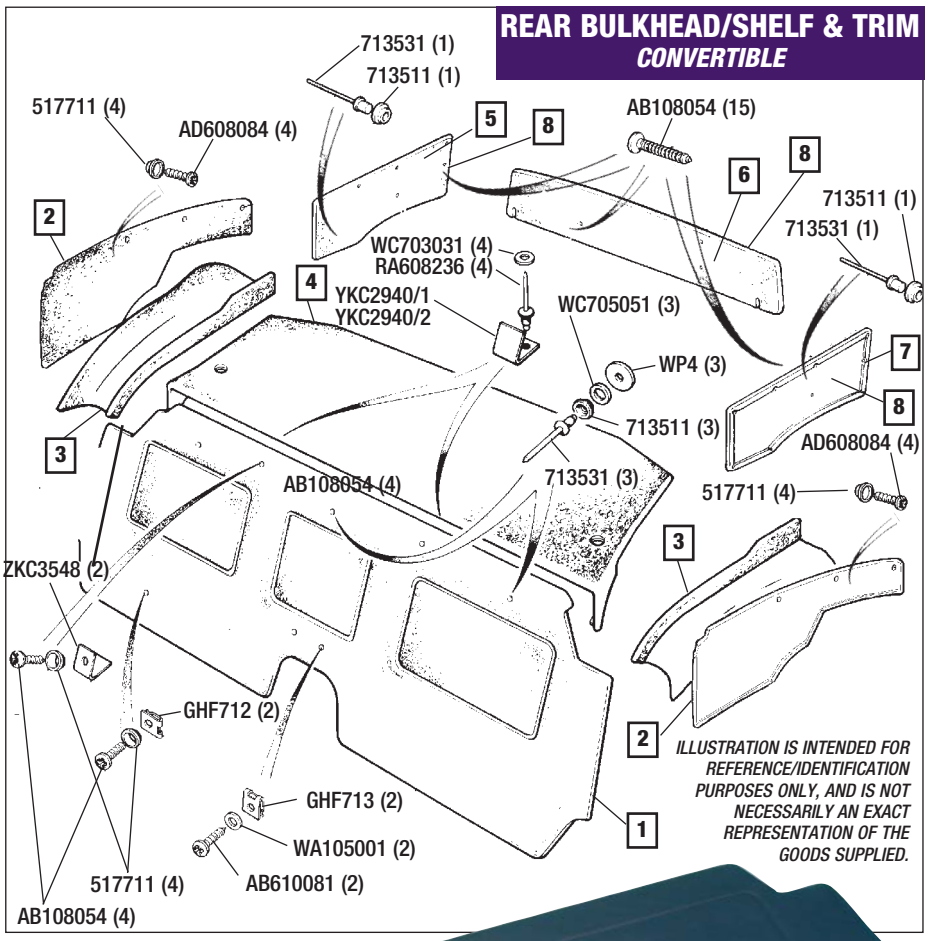

REAR BULKHEAD TRIM PANEL IN BLUE FOR CONVERTIBLES (PART NO. WKC4624JJ). ALSO SUPPLIED IN BLACK, BEIGE & TAN.

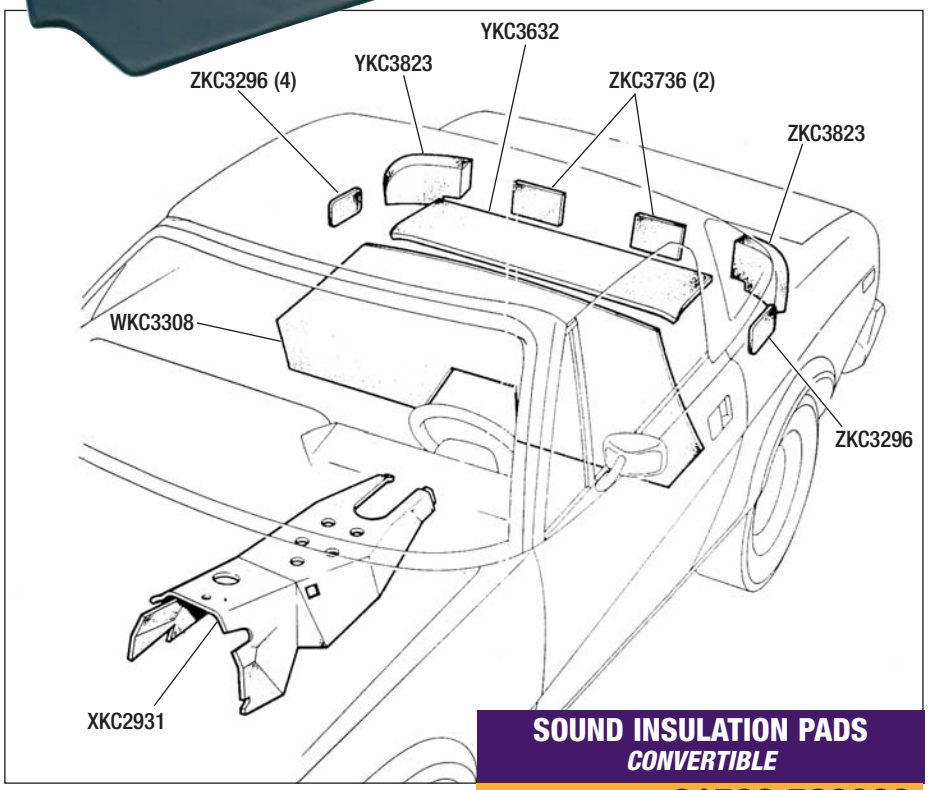

TO ORDER: 01522 568000
www.rimmerbros.co.uk

COUPE

Rear Bulkhead/Shelf Trim & Rear 1/4 Panel ('B' Post)

Coupe only.

REAR BULKHEAD TRIM PANEL

Description	Qty Req.	Part No.
Rear Bulkhead Trim Panel;		
Black	(1)	**WKC3922PA**
Beige	(1)	**XKC781AA**
Blue	(1)	**XKC3588JJ**
Tan	(1)	**XKC3588AM**
Trim Fasteners *(Bulkhead panel);*		
Screw-Self Tapping	(2)	**AD608084**
Cup Washer	(2)	**517711**
Spire Clip	(2)	**GHF712**
Screw-Self Tapping	(2)	**511786**
Cup Washer	(2)	**517711**
Spire Clip	(2)	**GHF712**

REAR PARCEL SHELF - ORIGINAL

See also; Remanufactured Parcel Shelf.

Rear Parcel Shelf; *(3 section compartment)*
Early vehicles, note position of cut-out for seat belts.

Description	Qty Req.	Part No.
Black	(1)	**WKC3828PA**
Beige	(1)	**WKC3828AA**
Escutcheon-Seat Belt	(2)	**YKC191**

Rear Parcel Shelf; *(2 section compartment)*
Late vehicles, note position of cut-out for seat belts.

Description	Qty Req.	Part No.
Black	(1)	**WKC3800PA**
Beige	(1)	**WKC3800AA**
Blue	(1)	**WKC4614JJ**
Tan	(1)	**WKC4614AM**
Escutcheon-Seat Belt	(2)	**YKC191**

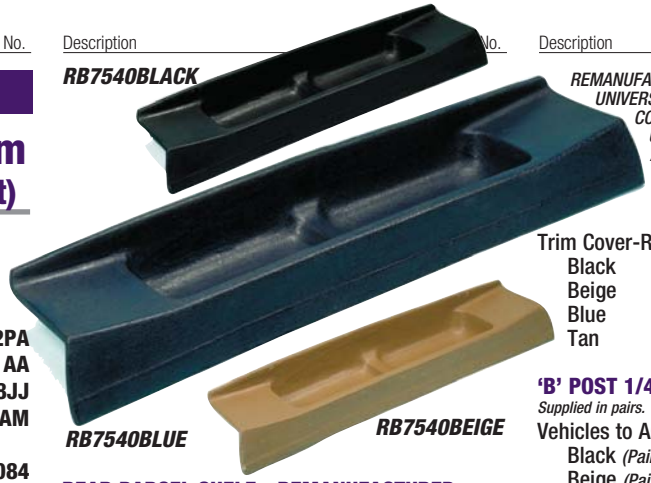

REAR PARCEL SHELF - REMANUFACTURED

See photo. Manufactured in heat resistant fibreglass with leather grain finish, will not bubble in hot sun as original vinyl/hardbord unit. NB; cut-out for seat belts not pre-cut, use existing shelf to mark cut-outs.

Rear Parcel Shelf; *(2 section compartment)*
Universal fitting, all years.

Description	Qty Req.	Part No.
Black	(1)	**RB7540Black**
Beige	(1)	**RB7540Beige**
Blue	(1)	**RB7540Blue**
Tan	(1)	**RB7540Tan**
Escutcheon-Seat Belt	(2)	**YKC191**

Trim Fasteners *(Parcel shelf); All Models.*

Description	Qty Req.	Part No.
Support Bracket		
Rh	(1)	**XKC3034**
Lh	(1)	**XKC3033**
Setscrew	(4)	**SH106121**
Washer-Spring	(4)	**WL106001**
Washer-Flat	(4)	**WA106001**
Screw-Self Tapping	(2)	**ZKC1602**
Cup Washer	(2)	**517711**
Spire Clip	(2)	**FJ2404**
Screw	(2)	**ZKC1613**
Cup Washer	(2)	**517711**
Screw-Self Tapping	(4)	**ZKC1601**
Cup Washer	(4)	**517711**
Captive/Locknut	(4)	**ZKC471**

REMANUFACTURED IN GRP, THESE (2 SECTION/ UNIVERSAL FITTING) REAR PARCEL SHELVES FOR COUPES WILL NOT DETERIORATE IN SUNLIGHT - UNLIKE THE ORIGINALS.
ALSO AVAILABLE IN TAN.

Trim Cover-Rear Screen *(All Models);*

Description	Qty Req.	Part No.
Black	(1)	**WKC3535PA**
Beige	(1)	**WKC1670AA**
Blue	(1)	**WKC4951JJ**
Tan	(1)	**WKC4951AM**

'B' POST 1/4 TRIM PANEL

Supplied in pairs.

Vehicles to ACG15316 *(with pockets);*

Description	Qty Req.	Part No.
Black *(Pair)*	(1)	**WKC301PA**
Beige *(Pair)*	(1)	**WKC301AA**

Vehicles from ACG15317 *(No pockets);*

Description	Qty Req.	Part No.
Black *(Pair)*	(1)	**WKC3533PA**
Beige *(Pair)*	(1)	**WKC3943AA**
Blue *(Pair)*	(1)	**WKC4611JJ**
Tan *(Pair)*	(1)	**WKC4611AM**
Clip-Trim Retaining	(6)	**GHF1222**

All Models.

WE SUPPLY 'B' POST TRIM FOR BOTH EARLY & LATE MODELS, SEE LISTINGS FOR FULL DETAILS. AVAILABLE IN BLACK & BEIGE FOR EARLY MODELS (WITH POCKETS) AND BLACK, BEIGE, BLUE & TAN FOR LATE MODELS (WITHOUT POCKETS).

REAR BULKHEAD/SHELF TRIM & REAR 1/4 PANEL ('B' POST)
COUPE

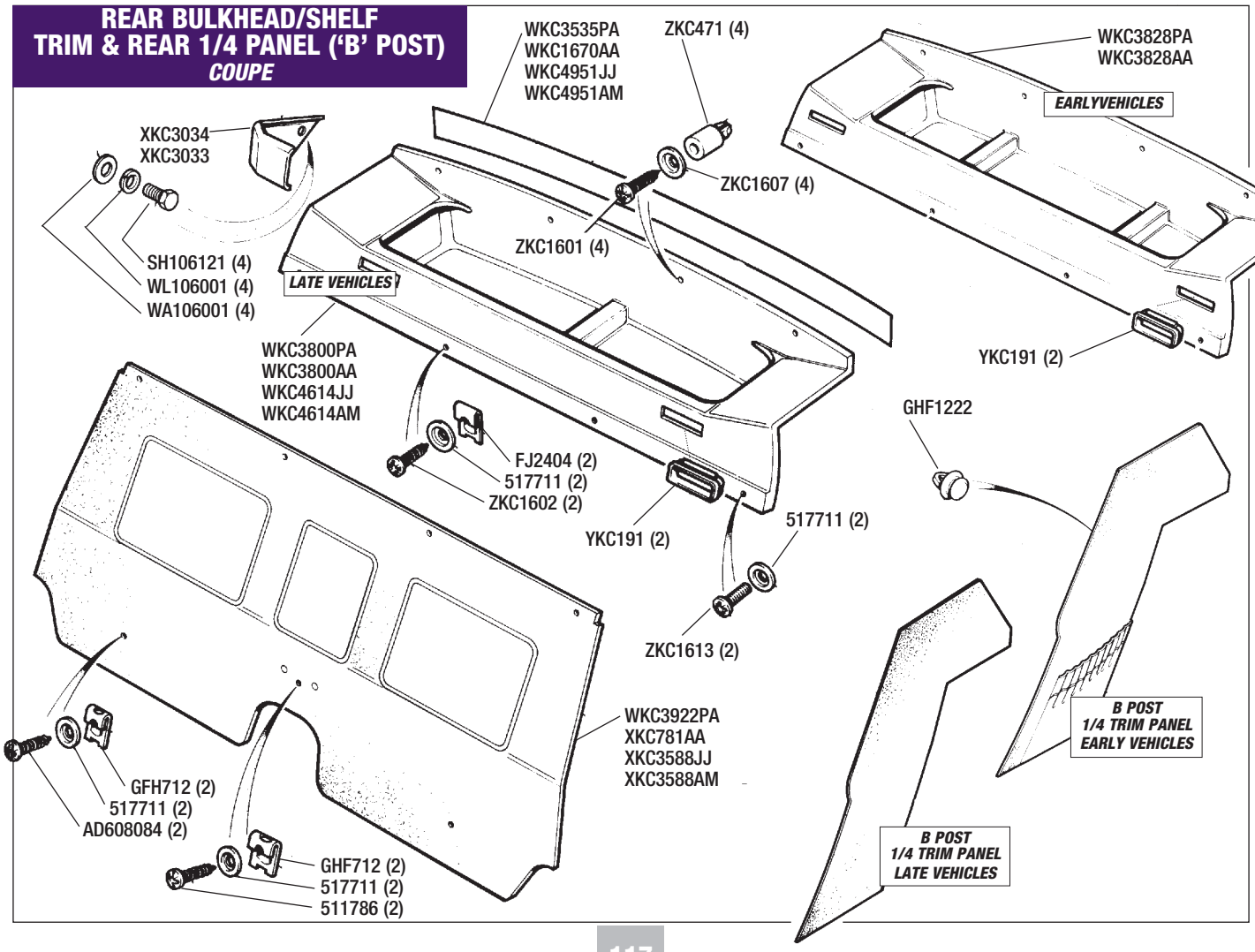

Description | Qty Req. | Part No.

SOUND INSULATION PADS

CONVERTIBLE & COUPE

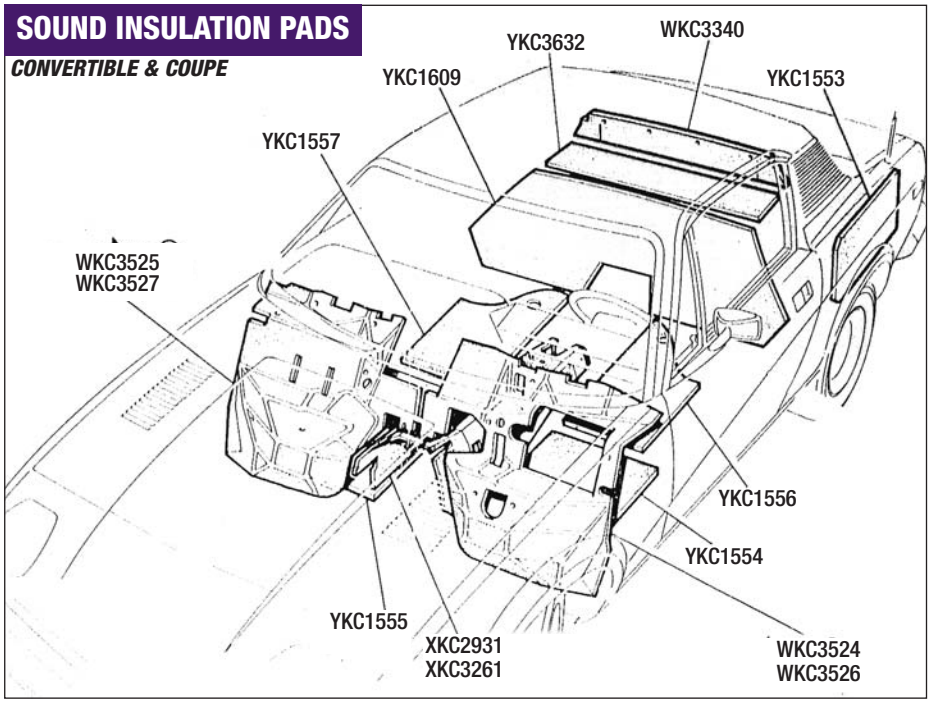

Sound Insulation Pads

FHC & DHC - see also page 116 for additional DHC insulation pads.

Description	Qty Req.	Part No.
Main Bulkhead;		
RHD Models		
RH	(1)	**WKC3525**
LH	(1)	**WKC3524**
LHD Models		
RH	(1)	**WKC3527**
LH	(1)	**WKC3526**
Transmission Tunnel;		
DHC & FHC *(To VIN 202093)*	(1)	**XKC2931**
FHC *(VIN 202094 on)*	(1)	**XKC3261**
Front Footwell		
RH	(1)	**YKC1555**
LH	(1)	**YKC1554**
Rear Footwell		
RH	(1)	**YKC1557**
LH	(1)	**YKC1556**
Rear Bulkhead *(FHC only)*	(1)	**YKC1609**
Rear Bulkhead - Top	(1)	**YKC3632**
Shelf *(Below rear window) FHC only.*	(1)	**WKC3340**
Boot Floor	(2)	**YKC1553**

Boot Trim & Fittings

Description	Qty Req.	Part No.
Boot Trim Panel Kit *Kits includes items marked*. (6 Pieces).*	(1)	**RB7334**
Boot Trim Panel Fitting Kit *Kits includes items marked+.*	(1)	**RB7334FK**
Mat-Boot Floor *(Black)*		
TR7	(1)	**XKC1567PA**
TR8 *(Battery in boot)*	(1)	**XKC2475PA**
Button	(2)	**553252**
Socket *(Mat retaining)*	(2)	**554517**
Rivet *(Stud retaining)*	(2)	**563769**
Stud *(Mat retaining) Located on boot floor.*	(2)	**554021**
Board *(Spare wheel cover)*	(1)	**XKC1558**
Strap *(Spare wheel retaining)*	(1)	**ZKC1215**
Rivet	(2)	**567278**
Retaining Plate	(1)	**614685**
Trim Board-Rear Lamp*		
Rh	(1)	**XKC2648**
Lh	(1)	**XKC2647**
Fastener +	(2)	**ZKC1275A**
Trim Board-Side*		
Rh	(1)	**YKC3657**
Lh	(1)	**YKC3655**
Fastener +	(6)	**609412**
Cover Plate *(Fuel filler neck)*	(1)	**XKC3020**
Gasket *(For XKC3020)*	(1)	**XKC3021**
Screw-Self Tapping +	(4)	**AB108054**
Washer-Spring +	(4)	**WL205**
Spire Clip +	(4)	**GHF712**
Trim Board-Bulkhead*		
Rh	(1)	**YKC2631**
Lh	(1)	**YKC2630**
Fastener +	(4)	**609412**
Spire Clip +	(4)	**608520**
Cover *(Shock absorber)*	(2)	**ZKC182**
Screw-Self Tapping +	(6)	**AB108054**
Washer-Spring +	(6)	**WL205**
Spire Clip +	(6)	**GHF712**
Rear Bulkhead Mat; *(Black)*		
Convertible	(1)	**XKC3422PA**
Coupe	(1)	**XKC3736PA**
Fastener *(Use as required)*	(a/r)	**RGP6770**

PHOTO SHOWS BOOT FLOOR MAT (XKC1567PA), AND SPARE WHEEL BOARD (XKC1558).

BOOT TRIM & FITTINGS

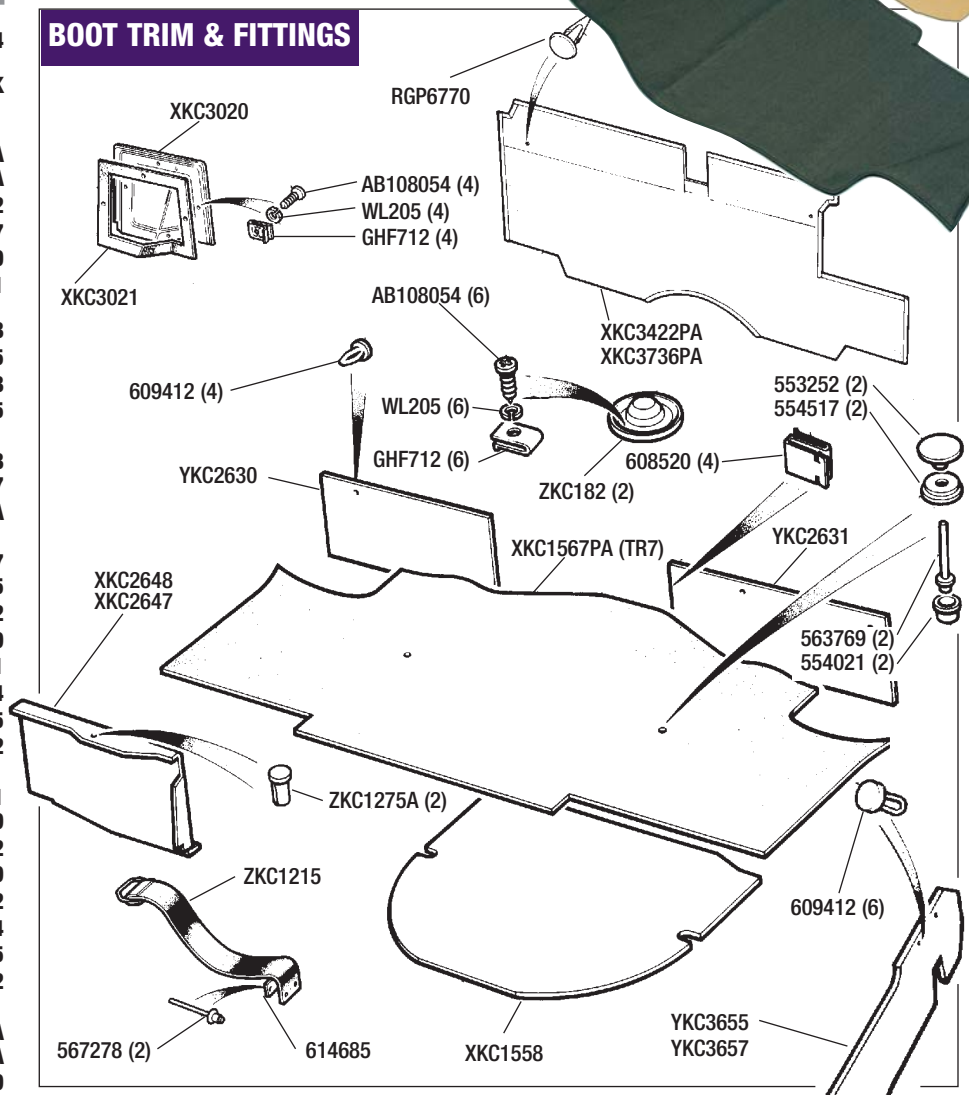

DON'T FORGET THE BOOT! PHOTO SHOWS BOOT TRIM KIT RB7334.

TO ORDER: 01522 568000
www.rimmerbros.co.uk

Hood Frame & Fittings

Description	Qty Req.	Part No.
Hood Frame & Cover Assembly	(1)	*See Hood Covers*
Hood Frame *(Less header rail);*		
New	(1)	**WKC3667**
Reconditioned	(1)	**WKC3667R**
Hood Rail (Rear)	(1)	**RB7640**
Retains hood cover to rear deck.		
Header Rail *(Front)*	(1)	**XKC2877**
Screw *(Header rail to hood frame)*	(2)	**SH106161**
Front Seal-Header Rail	(1)	**ZKC3099**
Retainer *(For ZKC3099 seal);*		
Rh	(1)	**YKC3342**
Lh	(1)	**YKC3341**
'Pop' Rivet	(10)	**RA608236**
Release Handle		
Rh	(1)	**622248**
Lh	(1)	**622247**
Screw	(4)	**SF105123**
Locking Plate		
Located inside windscreen frame.		
Rh	(1)	**YKC3682**
Lh	(1)	**YKC3681**
Screw	(4)	**AAU8826**
Hood Webbing Material	(2)	**RB7318**
Supplied in 60" length strips.		
Retainer *(Hood Webbing)*	(8)	**602030**
Rivet	(16)	**713531**
Bracket/Retainer *(Hood Webbing)*	(2)	**YKC3301**
Cover *(Hood frame linkage);*		
Front		
Rh	(1)	**WKC3644**
Lh	(1)	**WKC3643**
Rear		
Rh	(1)	**WKC3646**
Lh	(1)	**WKC3645**
Rivet (8)	(8)	**GHF1083**
Cover/Trim *(Hood frame hinge);*		
Rh	(1)	**WKC3296**
Lh	(1)	**WKC3295**
Screw-Self Tapping	(8)	**AB108054**
Washer-Cup	(8)	**WA105004**
Pivot Bush *(Upper)*	(4)	**624580**
Spacer	(4)	**624583**
Screw	(4)	**SH106161**
Screw	(2)	**SH105161**
Washer-Flat	(2)	**WA105004**
Pivot Bush *(Lower)*	(16)	**624580**
Spacer	(16)	**624583**
Screw	(16)	**624569**
Nut-Special	(16)	**AFU1197**
Screw *(Frame to body)*	(4)	**GL108254**
Washer-Spring	(4)	**GHF382**
Washer-Flat	(4)	**WA108054**

HOOD FRAME & FITTINGS

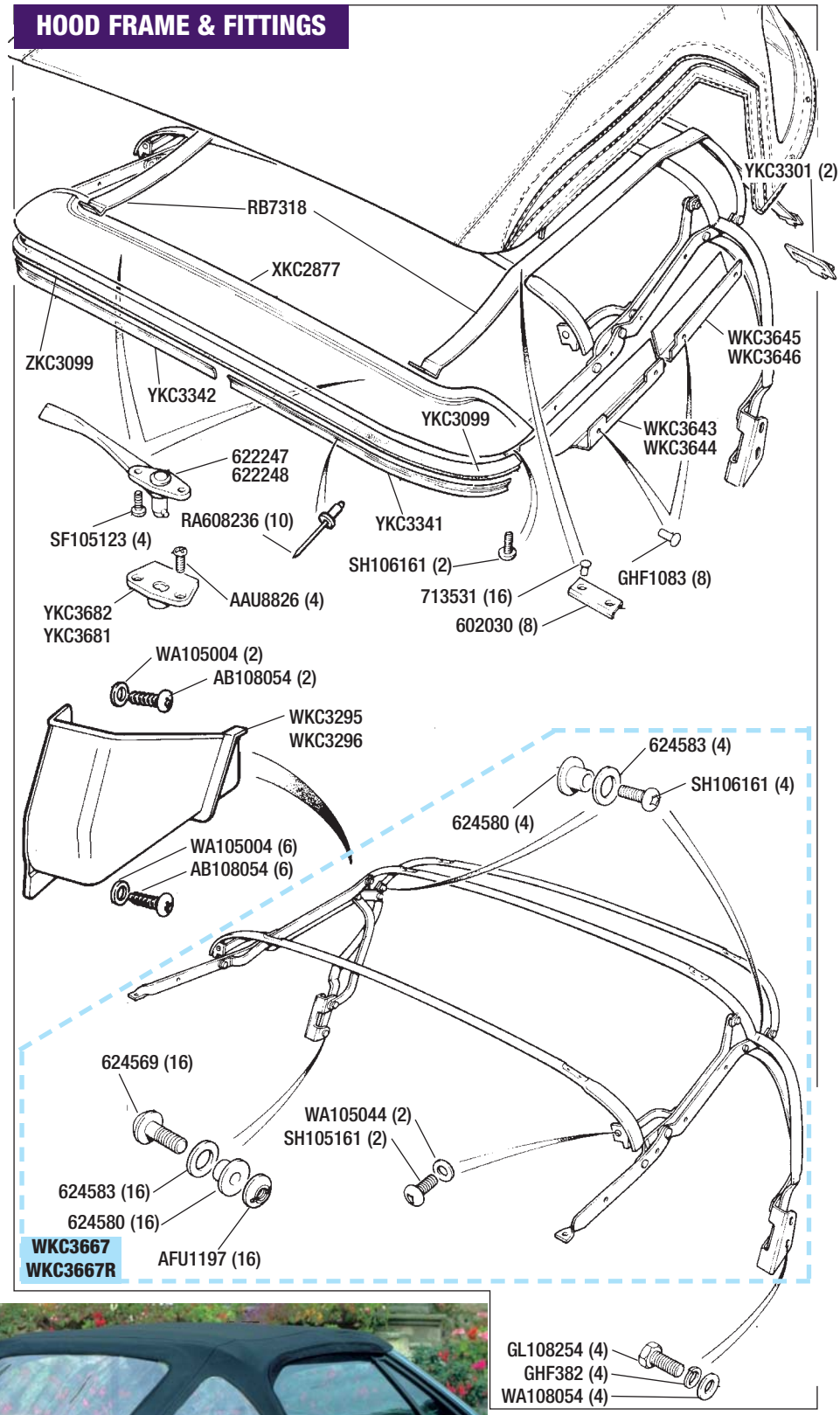

THE TR7 SHOWN HERE IS EQUIPPED WITH A BLACK MOHAIR HOOD COVER. IT IS ALSO FITTED WITH ONE OF OUR MK3 BODY STYLE KITS (BODY STYLING IS IN ACCESSORIES).

Description | Qty Req. | Part No.

Hood Covers

WHICH HOOD/MATERIAL ?
The Choice is yours!

We stock a comprehensive range of hoods/ materials to suit all budgets and requirements. They include re-manufactured hoods to factory specification by Tickford (black only) - using the original Coventry Hood & Seating production jigs, a range of Top Quality replacement Hoods in 'Everflex' (Pvc) with a choice colours, a 'Vynide' (Pvc) Hood with a 'BL' type grain in black, 'Double Duck' (black canvas) Hoods, and for that real touch of class, 'Mohair' Hoods, again with a choice of colours.
Our Hood Stowage and Tonneau Covers compliment our range of Hood covers.

HOOD COVER & FRAME ASSEMBLY

Hood & Frame *(Assy - Reconditioned);*
COMPLETE, READY TO FIT.
Supplied with reconditioned frame (complete with fittings/seals) fitted with new vinyl cover (black, tan or blue). Other colours and mohair or doudle duck (canvas) supplied to special order. Supplied on strict exchange basis. Old unit must be complete and serviceable.

Black *(Hood & recon frame)*	(1)	**WKC3665PAR**
Tan *(Hood & recon frame)*	(1)	**WKC3665AMR**
Blue *(Hood & recon frame)*	(1)	**WKC3665JJR**

HOOD COVER

Hood Cover *'Original Equipment';*
Includes hood poppers.

Black* *(See special note)*	(1)	**WKC3668ORIGBLACK**
Tan+ *(See special note)*	(1)	**WKC3668ORIGTAN**
Blue+ *(See special note)*	(1)	**WKC3668ORIGBLUE**

**Remanufactured by Tickford using the original Coventry Hood & Seating 'Hand Production' jigs & tools. The hood material is virtually indistinguishable from the original in weight, pattern and texture.*

+Original 'BL' hood. When stocks are exhausted, we can supply either a remanufactured Tickford (subject to availability), or one of our Replacement (Pvc) hoods. Please refer to current price guide for availability.

BLACK
WKC3668ORIG BLACK

Hood Cover *'Replacement' (Pvc);*
Includes hood poppers.
Manufactured to a very high standard to ensure an excellent fit, in either 'Vynide' (Black only), or 'Everflex' (Colours). Both are Top Quality materials, and are a close match to the original.

Black	(1)	**WKC3668ALTBLACK**
Tan	(1)	**WKC3668ALTTAN**
Blue	(1)	**WKC3668ALTBLUE**
Beige	(1)	**WKC3668ALTBEIGE**
White	(1)	**WKC3668ALTWHITE**
Grey	(1)	**WKC3668ALTGREY**

BLACK
WKC3668ALTBLACK

BEIGE
WKC3668ALTBEIGE

TAN
WKC3668ALTTAN

WHITE
WKC3668ALTWHITE

BLUE
WKC3668ALTBLUE

Hood Cover *'Double Duck' (Canvas);*
Includes hood poppers.
A good quality canvas material manufactured to a very high standard to ensure an excellent fit. Available in Black only.

Black	(1)	**WKC3668DUCK**

BLACK
WKC3668DUCK

Hood Cover *'Mohair';*
Includes hood poppers.
A very high quality mohair material which resists colour fade & creasing. They are manufactured to a very high standard to ensure an excellent fit. All our Mohair hoods have a inner headlining.

Black	(1)	**WKC3668MHBLACK**
Brown	(1)	**WKC3668MHBROWN**
Blue	(1)	**WKC3668MHBLUE**
Beige	(1)	**WKC3668MHBEIGE**
Green	(1)	**WKC3668MHGREEN**

BLACK
WKC3668MHBLACK

BLUE
WKC3668MHBLUE

BROWN
WKC3668MHBROWN

BEIGE
WKC3668MHBEIGE

Description | Qty Req. | Part No. | Description | Qty Req. | Part No.

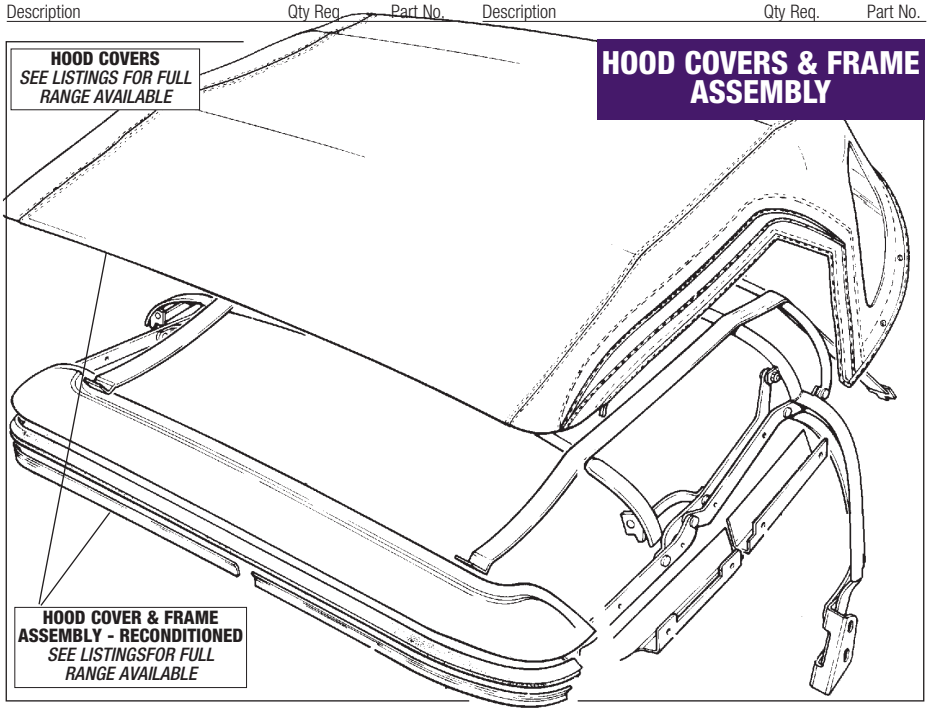

Hood Fasteners & Hood Care

Hood Fastener Kit *Fastener kit is per vehicle, and includes 8 poppers, rivets & body studs.*	(1)	**RR1280**
Hood 'Popper'		
Male *Fits on the outside of hood.*	(8)	**ZKC751**
Female *Fits on the inside of hood.*	(8)	**713501**
Hood Popper Fitting Tool	(1)	**RX1342**
Body Stud *(Located on bodywork)*	(8)	**713511**
Rivet *(Use with 713511)*	(8)	**713531**
Hood Seam Sealer; *See also; 'Renovo' Hood Care Products.*		
For Canvas/Mohair Hoods	(a/r)	**RX1257**
Waterproof Hood Dressing; *See also; 'Renovo' Hood Care Products.*		
Clear (1 litre)	(a/r)	**RX1373**
Information Label -		
Hood Instructions *Located on passenger sun visor.*	(1)	**RB7144**

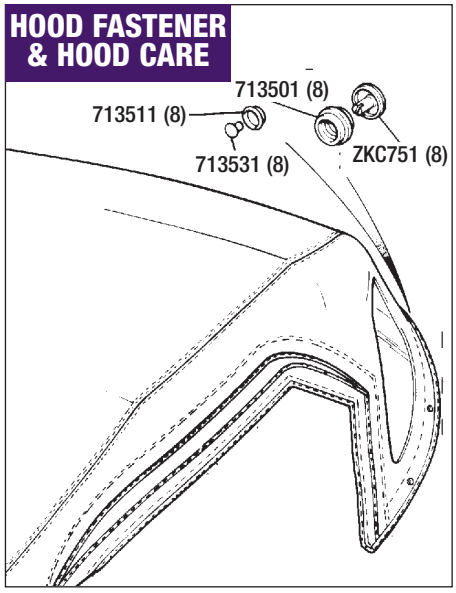

HOOD CARE

A range of products to clean, renovate and protect your hood cover, tonneau cover or hood stowage cover, whether made from vinyl, canvas or mohair material.

Vinyl Top Cleaner (500ml)	(a/r)	**RX1529**
Dry Cleaner Shampoo - Canvas/mohair (300ml)	(a/r)	**RX1530**
Soft Top Reviver - Canvas/mohair *Available in black, blue & brown.*		
500ml size	(a/r)	**RX1525**
1 Litre size	(a/r)	**RX1524**
Ultra Proofer - Canvas/mohair		
500ml size	(a/r)	**RX1527**
1 Litre size	(a/r)	**RX1526**
Ultra Proofer - Vinyl (500ml)	(a/r)	**RX1528**
Plastic Window Polish		
30ml size	(a/r)	**RX1531**
100ml size	(a/r)	**RX1532**

TO ORDER: 01522 568000
www.rimmerbros.co.uk

CONVERTIBLE

Body Finishers & Miscellaneous Trim

Convertible Models only.
This section is repeated in EXTERIOR TRIM & BADGES.

Description	Qty Req.	Part No.
WINDSCREEN FINISHERS & TRIM		
Front Edge Screen Finisher	(1)	**YKC3610**
Centre Screen Trim *(Inside car);*		
Black	(1)	**WKC3937PA**
Beige	(1)	**WKC3937AA**
Blue	(1)	**WKC3937JJ**
Tan	(1)	**WKC3937AM**
Rear Edge Screen Finisher;		
Black	(1)	**ZKC1432PA**
Beige	(1)	**ZKC1432AA**
Blue	(1)	**ZKC1432JJ**
Tan	(1)	**ZKC1432AM**
Off White	(1)	**ZKC1432NE**
Capping *(Door seal to screen pillar)*		
Rh	(1)	**YKC3377**
Lh	(1)	**YKC3376**
Rivet *(Capping to pillar)*	(2)	**RU608253**
Side Finisher/Drip Rail *Windscreen pillar.*		
Rh	(1)	**WKC3950**
Lh	(1)	**WKC3949**
Weatherstrip (Rh or Lh) *Windscreen pillar.*	(2)	**XKC3848**
BODY/COCKPIT TRIM		
Top Rubber-Quarterlight		
Rh	(1)	**YKC3283**
Lh	(1)	**YKC3282**
Guide-Drop Glass (Rear)		
Rh	(1)	**XKC2972**
Lh	(1)	**XKC2971**
'Pop Rivet'	(2)	**RB6407**
Door Corner Protector		
Rh	(1)	**ZKC2583**
Lh	(1)	**ZKC2582**
Capping *(Door seal to 'B' post)*		
Rh	(1)	**YKC3331**
Lh	(1)	**YKC3330**
Screw *(Capping to body)*	(2)	**AB108054**
Finisher *(Rear Cockpit)*		
Rh	(1)	**XKC2861**
Lh	(1)	**XKC2860**
Plastic 'Stud'	(8)	**713511**
Rivet	(8)	**713531**
Cover/Trim *(Hood frame hinge)*		
Rh	(1)	**WKC3296**
Lh	(1)	**WKC3295**
Screw-Self Tapping	(8)	**AB108054**
Washer-Cup	(8)	**WA105004**

FIT A MATCHING HOOD STOWAGE COVER TO COMPLIMENT YOUR HOOD.
ROLL-BAR IS THE 'ALEY' TYPE - SEE NEXT PAGE FOR PART NUMBER INFORMATION.

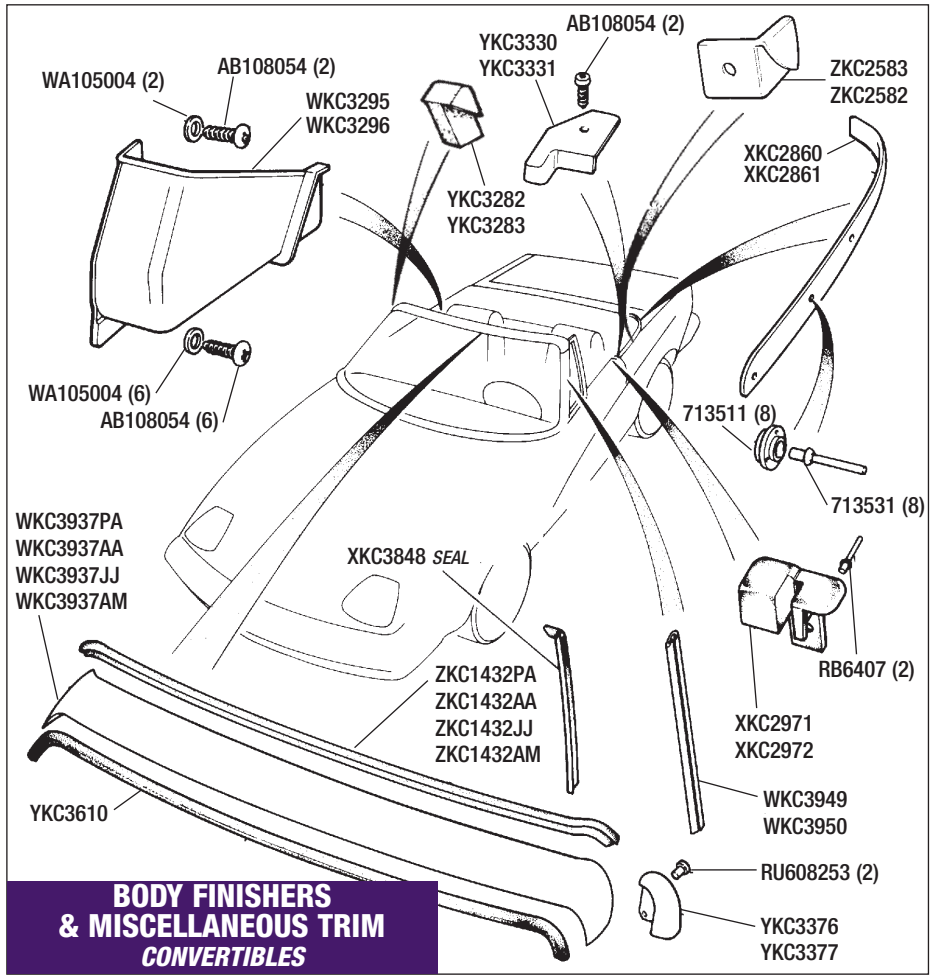

BODY FINISHERS & MISCELLANEOUS TRIM
CONVERTIBLES

Hood Stowage Cover

See photo.
Our hood stowage covers are 'padded' as original equipment, and compliment our range of hoods. For the (3 Vertical) hood stowage boards, please refer to INTERIOR & TRIM-Rear Bulkhead & Trim/Shelf.

Hood Stowage Cover *(Pvc);*
Includes poppers. Top quality pvc material, in either 'Vynide' (Black), or 'Everflex' (Colours).

Black	(1)	**WKC5436BLACK**
Tan	(1)	**WKC5436TAN**
Blue	(1)	**WKC5436BLUE**
Beige	(1)	**WKC5436BEIGE**
White	(1)	**WKC5436WHITE**
Grey	(1)	**WKC5436GREY**

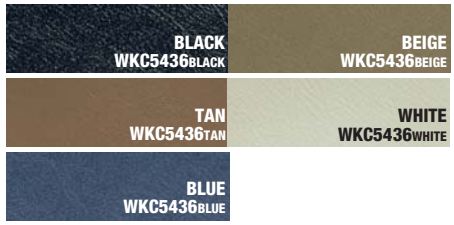

Hood Stowage Cover *'Double Duck' (Canvas);*
Includes poppers.
A good quality canvas material which is available in Black only.

Black	(1)	**WKC5436DUCK**

Hood Stowage Cover *'Mohair';*
Includes poppers.
A very high quality mohair material which resists colour fade & creasing.

Black	(1)	**WKC5436MHBLACK**
Brown	(1)	**WKC5436MHBROWN**
Blue	(1)	**WKC5436MHBLUE**
Beige	(1)	**WKC5436MHBEIGE**

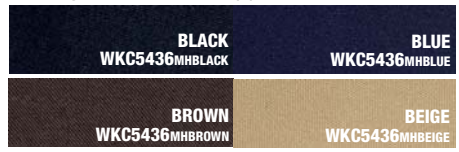

FASTENERS

Hood 'Popper' *Fits on the stowage cover.*		
Male	(17)	**ZKC751**
Female	(17)	**713501**
Hood Popper Fitting Tool	(1)	**RX1342**
Screw	(10)	**AB108054**
Body Stud*	(5)	**713511**
'Pop' Rivet*	(5)	**713531**
**Locates to Hood Frame Hinge Covers.*		
Body Stud+	(3)	**713511**
'Pop' Rivet+	(3)	**713531**
Washer+	(3)	**WC705051**
Washer+	(3)	**WP4**

+Locates to Rear Bulkhead Trim Panel.
**+See also Hood Finishers/Body Trim, and INTERIOR & TRIM Section.*

HOOD STOWAGE COVER

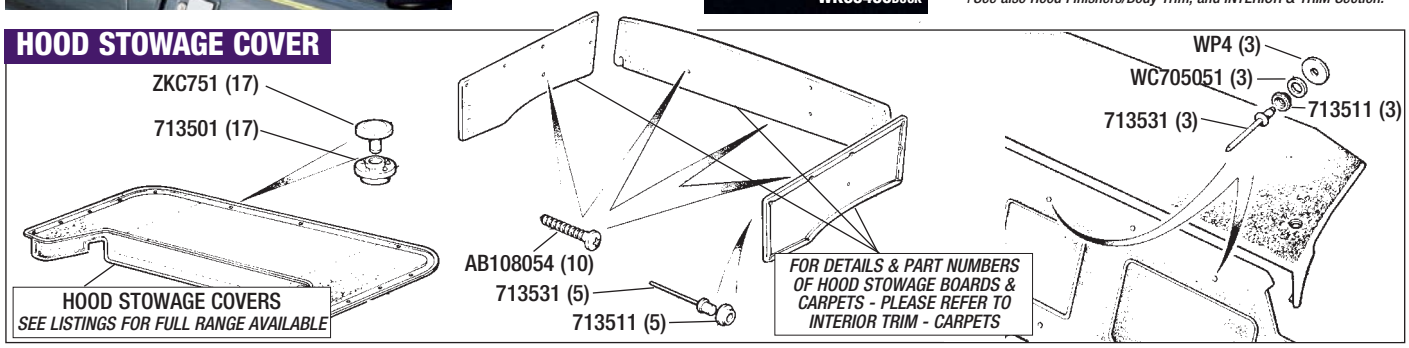

Description	Qty Req.	Part No.

Tonneau Cover (Full)

See photo.

Tonneau Cover (Pvc);
Includes poppers. Top quality pvc material, in either 'Vynide' (Black), or 'Everflex' (Colours).

Black	(1)	GAC650BLACK
Tan	(1)	GAC650TAN
Blue	(1)	GAC650BLUE
Beige	(1)	GAC650BEIGE
White	(1)	GAC650WHITE

BLACK GAC650BLACK
BEIGE GAC650BEIGE
TAN GAC650TAN
WHITE GAC650WHITE
BLUE GAC650BLUE

Tonneau Cover *'Double Duck' (Canvas);*
Includes poppers.
A good quality canvas material which is available in Black only.

Black	(1)	GAC650DUCK

BLACK GAC650DUCK

Tonneau Cover *'Mohair';*
Includes poppers. A very high quality mohair material which resists colour fade & creasing.

Black	(1)	GAC650MHBLACK
Brown	(1)	GAC650MHBROWN
Blue	(1)	GAC650MHBLUE
Beige	(1)	GAC650MHBEIGE

BLACK GAC650MHBLACK
BLUE GAC650MHBLUE
BROWN GAC650MHBROWN
BEIGE GAC650MHBEIGE

FASTENERS

Hood 'Popper' (Male) *Fits on the outside of tonneau cover.*	(28)	ZKC751
Hood 'Popper' (Female) *Fits on the inside of tonneau cover.*	(28)	713501
Hood Popper Fitting Tool	(1)	RX1342
Washer *(*see fitting note A)*	(4)	WP4
Body Stud *(*see fitting note A)*	(4)	713511
'Pop' Rivet *(*see fitting note A)*	(4)	713531
Body Stud *(+see fitting note B)*	(12)	713511
'Pop' Rivet *(+see fitting note B)*	(12)	713531

****Fitting Note A -***
(4) ZKC3825, (4) 713511, (4) 713531;
1 of each at the base of both windscreen pillars.
2 of each on top centre of the dash.

+Fitting Note B -
(12) 713511, (12) 713531;
3 of each on both top doors.
6 of each on windscreen top rail.

TONNEAU COVER FASTENERS

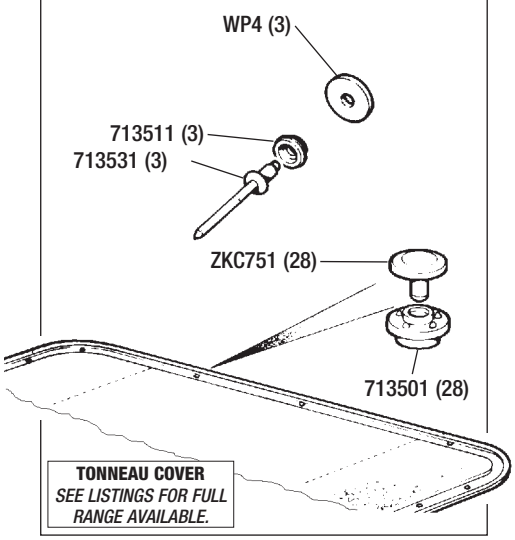

Roll-Bar (Aley)

See photo above.

'Aley' Roll Bar Assembly *(Black)* (1) **RB7271**
The Aley 'Aero' roll bar is fully padded, and is a safety feature recommended for ALL TR7/8 Convertible owners.

Cover only *(Black) (Padded)* (1) **RB7155Black**
Replacement cover for your existing Aley 'Aero' bar if it has been torn or damaged.

Wind Deflector

See photo below.

Do you enjoy driving with the hood down?
If so, then enhance your motoring pleasure with this wind deflector. A simple device, easily fitted behind the seats, it effectively stops the buffeting you receive from air being forced back into the cabin - year round open top driving is suddenly an option! Easy to fit & remove.

Wind Deflector (1) **RB7679**

TO ORDER: 01522 568000
www.rimmerbros.co.uk

Description	Qty Req.	Part No.

Sunroof (Weathershield)

(Factory Fitted - Full Length)

Vehicles approx 1977 to 1979.

See also; ***INTERIOR TRIM - Headlining.***

Weathershield Sunroof *(Recon)*	(1)	**WKC1222NCR**
Sebring white headlining.		
Roof Handle Assembly	(1)	**YKC594**
Rear Seal	(1)	**ZKC2275**
Air Deflector Blade		
Rh	(1)	**YKC878**
Lh	(1)	**YKC877**
Lifting Spring		
Rh	(1)	**ZKC690**
Lh	(1)	**ZKC691**
'Pop' Rivet	(6)	**560772**
Front Roof Channel	(1)	**XKC761**
'Pop' Rivet *(Front channel)*	(10)	**713531**
'Pop' Rivet *(Front channel)*	(2)	**RA608253**
Spring Wire *(Front channel)*	(2)	**ZKC1578**
Roof Side Channel		
Rh	(1)	**WKC1176**
Lh	(1)	**WKC1175**
Rear Roof Channel	(1)	**XKC763**
Screw	(15)	**AAU3281**
'Spire' Nut	(15)	**GHF1002**
Screw	(4)	**SE105141**
Washer	(4)	**WC105001**
Washer	(4)	**WF702101**
Finishing Cap	(4)	**YKC4373**
Top Rear Screen Finisher;		
Sebring White	(1)	**ZKC1432NC**
Off White	(1)	**ZKC1432NE**
Beige	(1)	**ZKC1432AA**
Tan	(1)	**ZKC1432AM**
Blue	(1)	**ZKC1432JJ**
Black	(1)	**ZKC1432PA**
Headlining *(Sebring white)*	(1)	**ZKC1798NC**

Headlining for car body roof panel with full length sun-roof opening only.

SUNROOF (TUDOR WEBASTO)

(Dealer fitted - 2/3 Length)

Vehicles approx 1976 to 1977

Before the optional factory full length sunroof was introduced in approx' 1977, Unipart offered a sliding sunroof kit (GLZ314), as a dealer fitted option prior to delivery, or fitted as an accessory to a customers vehicle at a later date. Easy to recognise, it is 1/3 smaller (in length and width) than the later factory fitted sunroofs (IE, it does not take-up all the available roof space). Unfortunately, neither the sun-roof or its service items are now available (or even listed).

It may be possible for us to recover your Tudor Webasto sunroof - providing it is serviceable.

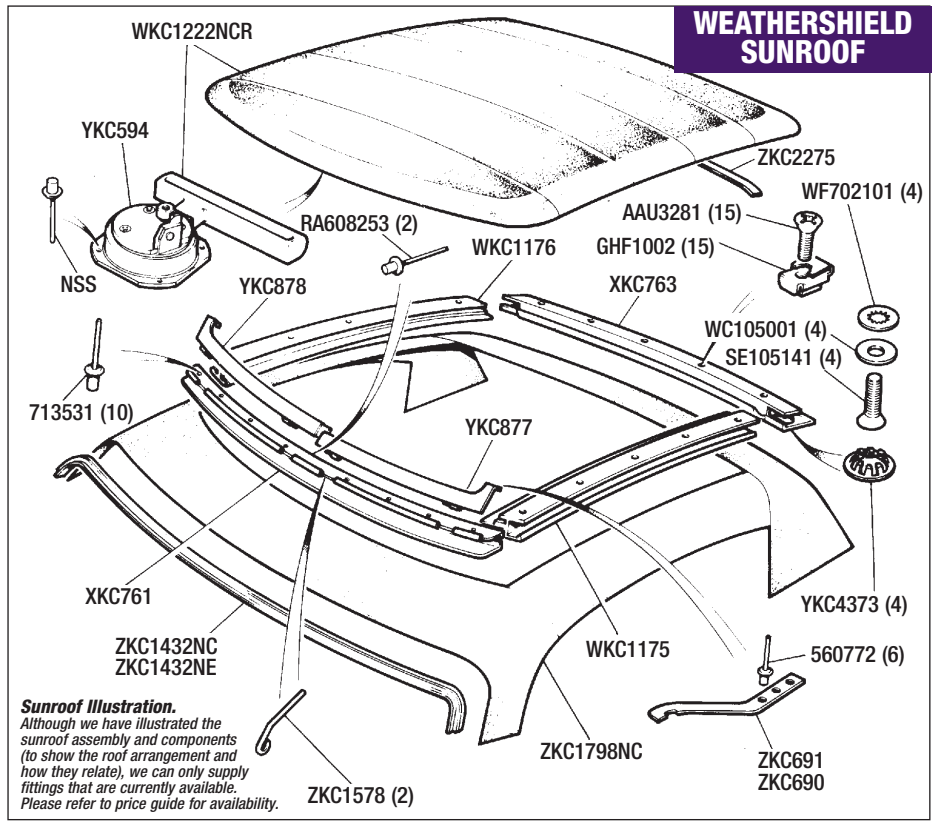

Sunroof Illustration.
Although we have illustrated the sunroof assembly and components (to show the roof arrangement and how they relate), we can only supply fittings that are currently available. Please refer to price guide for availability.

Sunroof (Edrose)

(Factory Fitted - Full Length)

Vehicles approx 1980 onwards

See also; ***INTERIOR TRIM - Headlining.***

Edrose Sunroof (Recon);		
Sebring White headlining	(1)	**WKC2659PAR**
Off White headlining	(1)	**WKC4955PAR**
Roof Handle Assembly	(1)	**RTC2387**
Trim-Roof Handle	(1)	**YKC2380**

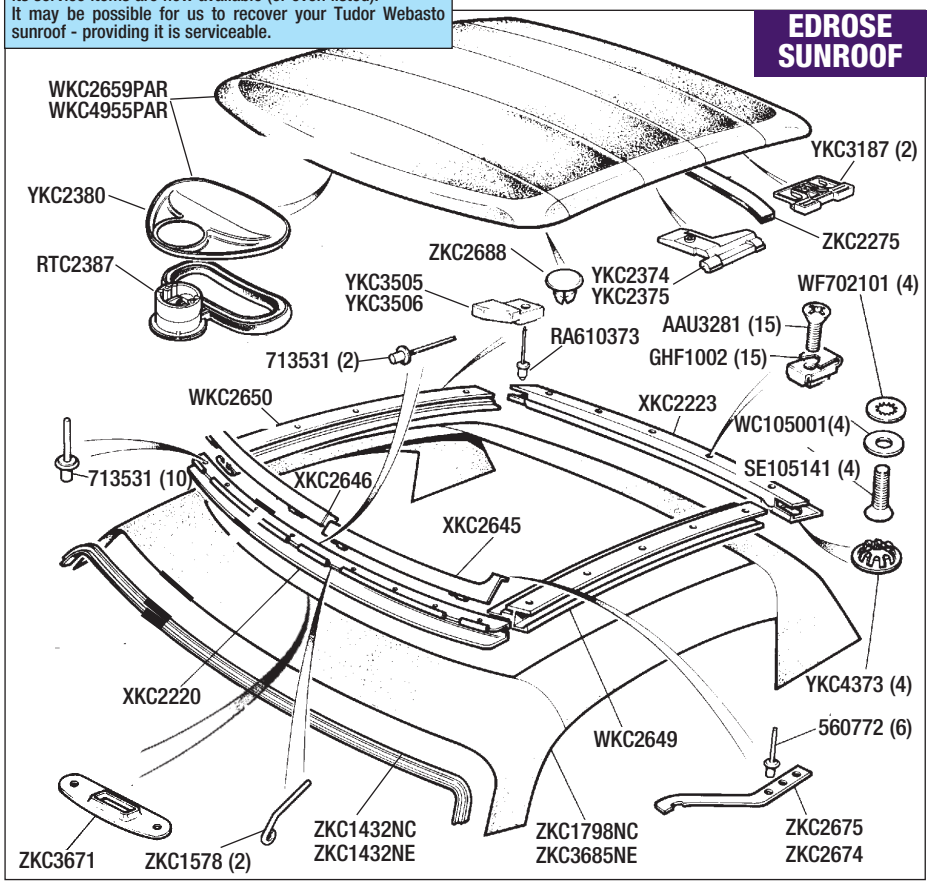

Roof Slides;		
Rear Slide	(2)	**YKC3187**
Right Hand Slide	(1)	**YKC2375**
Left Hand Slide	(1)	**YKC2374**
Trim Cap	(1)	**ZKC2688**
Rear Seal	(1)	**ZKC2275**
Air Deflector Blade		
Rh	(1)	**XKC2646**
Lh	(1)	**XKC2645**
Lifting Spring		
Rh	(1)	**ZKC2675**
Lh	(1)	**ZKC2674**
'Pop' Rivet	(6)	**560772**
Front Roof Channel	(1)	**XKC2220**
Finisher *(Head rail)*	(1)	**ZKC3671**
'Pop' Rivet *(Front channel)*	(10)	**713531**
'Pop' Rivet *(Front channel)*	(2)	**713531**
Spring Wire *(Front channel)*	(2)	**ZKC1578**
Side Roof Channel;		
Rh	(1)	**WKC2650**
Lh	(1)	**WKC2649**
Rear Roof Channel	(1)	**XKC2223**
End Stop;		
Rh	(1)	**YKC3506**
Lh	(1)	**YKC3505**
'Pop' Rivet	(2)	**RA610373**
Screw	(15)	**AAU3281**
'Spire' Nut	(15)	**GHF1002**
Screw	(4)	**SE105141**
Washer	(4)	**WC105001**
Washer	(4)	**WF702101**
Finisher Cap	(4)	**YKC4373**
Top Rear Screen Finisher;		
Sebring White	(1)	**ZKC1432NC**
Off White	(1)	**ZKC1432NE**
Beige	(1)	**ZKC1432AA**
Tan	(1)	**ZKC1432AM**
Blue	(1)	**ZKC1432JJ**
Black	(1)	**ZKC1432PA**
Headlining;		
Headlining for car body roof panel with full length sun-roof opening only.		
Sebring White	(1)	**ZKC1798NC**
Off White	(1)	**ZKC3685NE**

Sunroof Illustrations

Although we have illustrated the sunroof assembly and components (to show the roof arrangement and how they relate), we can only supply fittings that aren currently available. Please refer to guide list for availability.

TR8

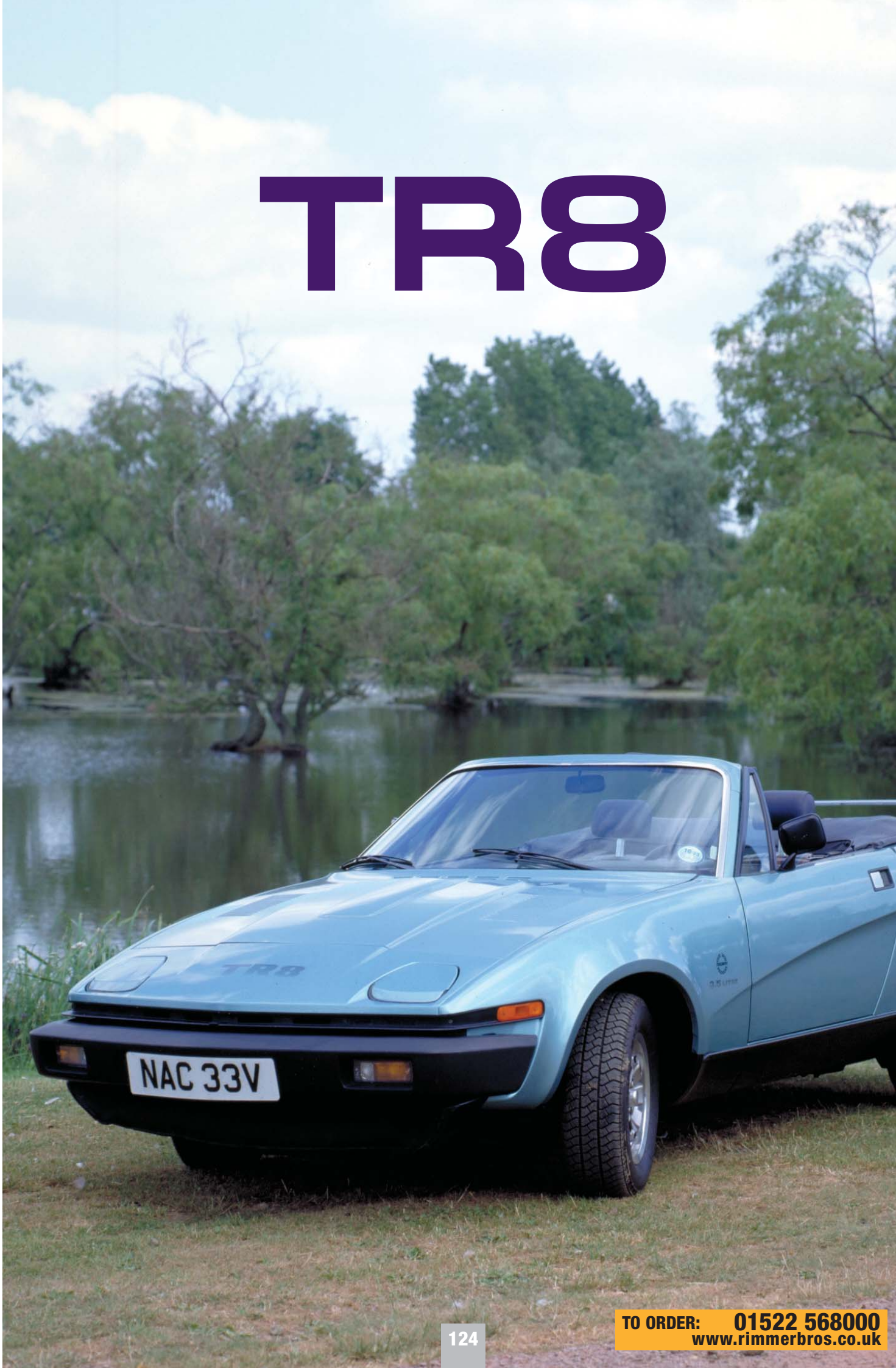

TO ORDER: 01522 568000
www.rimmerbros.co.uk

TR8 - TR7

PARTS COMPATIBILITY

There are many components that are common to TR7's and TR8's, and clearly others which are not. Sometimes the difference is obvious, in TR8 Engine & Clutch for instance there is clearly no common parts usage, so the listings in this section are extremely comprehensive. In other areas however, the differences are not so prominent or numerous (because only minor changes or modifications are required from the standard TR7 specification), rear axle ratio, fuel system, battery location, interior mats etc. So here we have only listed the parts that relate solely to the TR8. Where appropriate we have indicated when you will need to refer to the main TR7 section.

We have been careful to distinguish between Factory changes, and used illustrations where practicable which have been re-drawn from original British Leyland parts books.

Please remember, if you have any difficulty whatsoever you only have to phone, our staff are here to help you.

3.5 Litre V8 Service Information

Settings & Capacities

ENGINE SETTINGS

Firing Order	1, 8, 4, 3, 6, 5, 7, 2.

Right Hand Cyl Bank (Viewed from drivers seat);
Numbered from front of engine - 2, 4, 6, 8.)
Left Hand Cyl Bank (Viewed from drivers seat);
Numbered from front of engine - 1, 3, 5, 7.)

Spark Plug Gap;	
Carburettor engines	0.030" (0.80 mm)
Fuel Injection engines	0.035" (0.88 mm)
Distributor;	
Pick-up Air Gap	0.014"- 0.016" (0.36-0.41mm)
Ignition Timing - Carburettors;	
Static	7° B.T.D.C.
Idle	5° A.T.D.C.
Ignition Timing - Fuel Injection;	
Static	T.D.C.
Idle (With vacuum pipe disconnected)	T.D.C.
Idle Speed	750 - 900 RPM
Idle Mixture (% CO) - Carburettors;	
TR8/SD1	4% - 5%
Idle Mixture (% CO) - Fuel Injection;	
TR8	4% - 5%
SD1 (Late)	2% - 3%

CAPACITIES

Cooling System *Including Heater.*	10.9 Litre
Engine (20/50) *Including oil filter.*	5.1 Litre
Gearbox;	
5 Speed (ATF)	1.5 Litre
Automatic (ATF) *Inc Torque Convertor & Oil Cooler.*	6.96 Litre
Rear Axle - 5 Speed (EP90)	1.1 Litre
Power Steering Reservoir (ATF)	0.6 Litre

***TYRE PRESSURES** - (Standard 13" Wheels)*
(185/70 HR13 tyres)

Front (Cold)	24 Lbs Psi
Rear (Cold)	28 Lbs Psi

IMPORTANT INFORMATION

MODIFICATIONS

If you modify your standard TR7 to TR8 specification by using separate components rather than using one of our TR8 Conversion Kits, it is essential to up-rate the Braking System. We strongly recommend you also check & ensure that the Body, Suspension, Steering, Transmission etc, are capable of coping with the increased power of the V8 engine.

INSURANCE

You must inform your insurance company of ANY vehicle modifications. If you have problems insuring your TR8 please contact us, we have details of insurance companies and brokers who specialise in modified and classic cars.

TR8 &TR7-V8 Conversion Parts Line drawings & illustrations.
The vast majority of line drawings and illustrations used in the following sections are taken from the 'TR7 & TR8' British Leyland parts catalogue (part No RTC9020B).

AN INTRODUCTION TO THE TR8 CONVERSION

The conversion of a standard TR7 to TR8 specification (TR7-V8) is relatively straightforward and can be carried out by any competent DIY car enthusiast.

The basic components to substitute are: Engine, Subframe, Propshaft, Brakes and Exhaust, with the option of fitting Uprated Suspension to improve handling, and changing the 5-speed rear axle Ratio to improve gearing.

At Rimmer Bros, we believe original is best (i.e. what the factory actually designed), so we strive to supply as many original parts as possible. One area where we do believe it is important to use the original component is the subframe. Our TR8 conversion kits include a Brand New original subframe with the original type brackets, - designed to cope with the stress and torque of the V8 engine, unlike some types that are on the market. Another bonus with the original subframe is that when used as a datum, everything else in the drive train, i.e. Gearbox, Propshaft, Rear Axle, all line-up. This is not the case when non-standard parts are purchased separately in an attempt to save money. The end result could well be clearance, vibration, and fitting problems, resulting in false economy.

Ultimately, the value of your car will be enhanced by using original specification components when converting your TR7 to a TR8, and if you ever decide to sell, prospective purchasers will soon identify (and value higher), a car that has been converted correctly opposed to one that has just had a V8 engine 'thrown in'.

Generally, it is best to start with a 5-speed car (the 4 speed gearbox and rear axle are not sufficiently robust). If you have a 4-speed or an automatic TR7, we will be pleased to quote for a package to supply the necessary parts to give you a 5-speed TR8. The 5 speed TR7 gearbox can be re-used but it must be fitted with the V8 bellhousing and clutch release arm pivot pin (and bearing carrier). We also supply a TR8 propshaft (for use with the original TR8 subframe & engine/gearbox mountings), it is shorter and stronger than the TR7 propshaft. The 5-speed rear axle can also be re-used, though you may find the ratio (usually 3.9:1) too high, resulting in a low top-end. We supply exchange axles with either standard or Limited Slip Diff's, fitted with the 3.08:1 ratio if required. (NB - larger wheels/tyres can also affect final gearing).

It goes without saying that the entire exhaust system will need to be replaced, and it is essential you uprate the braking system. We also recommend the fitting of uprated springs and shock absorbers - to improve handling, and that you check the condition of bushes, ball joints, steering etc, for wear.

Last but not least is the engine. The Rover (3.5 Litre) SD1-V8 unit is a reliable and robust unit which can be easily adapted to fit the TR7. It provides increased power and torque, with an almost unlimited capacity for modification and tuning. Indeed, fitting a 3.9, 4.6 or even a 5.2 litre Rover V8 engine can offer many 'smiles per mile'! Probably the best starting point for the conversion is for you to obtain a used SD1 3.5 litre engine unit - complete with all the ancillaries, which you can then use in the purchase of an exchange reconditioned engine. We supply a range of V8 engines, new & reconditioned. Another popular option is to rebuild the used engine yourself - which is relatively inexpensive if you purchase a rebuild kit.

Finally, depending upon the type of carburettors used in the conversion, it may be necessary to use the later type 'double bulge' bonnet (if not already fitted).

It is impossible to list here all the different combinations of parts to carry out a TR7-V8 conversion. We have selected the most popular for our conversion kits, offering the best value for money coupled with simplicity.

How far you wish to take the project is entirely your choice!

ORIGINAL IS BEST
ORIGINAL TR8 SUBFRAME, DESIGNED TO FIT.

Our TR8 Conversion Kits Make it Easy

3 Kits to choose from

We have tried to make it as easy as possible for you to select and order the kit that best suits your budget and requirements, so we have created 3 starter kits for you to choose from to convert your TR7 to a TR8.

How to choose your starter Kit

Starting with the basic kit, we have listed the major components required to do the job.
Kits A, B & C are based on the basic kit, but offer different combinations of exhaust systems.
For example, you can have a 'quieter' twin centre box system (in lieu of the 'H' pipe) or the 'loud drainpipe' large bore single exhaust.
All systems are supplied with a pair of stainless steel tubular manifolds for improved performance.
The uprated brake kit supplied with all three kits uses calipers derived from the Rover Vitesse, adapted for use with special vented discs that can be bolted direct to the TR7 4-stud hub.
A minimum 14" diameter road wheel is required to clear the calipers (see Minilite Replicas in roadwheel section.

WHY STOP HERE ?

Our Starter Kits give you the basic parts needed to initiate the TR8 conversion, but there are many other parts (listed throughout this catalogue) you may wish to consider fitting to further improve your TR8 in the future, such as; uprated anti-roll bars, front anti-dive kit, uprated/lowered road springs, uprated shock absorbers such as Spax, Koni or Gaz, uprated supension bushes (hard and polyurethane), power steering, rear axle/ratio, body styling kit, and if the standard 3.5 V8 is not powerful enough for you we have larger capacity engines as well as performance components for standard units.

See ROAD WHEELS (in the main TR7 section) for details on 14" Minilite Replica wheels, and ACCESSORIES for body kits/wheel arches/ spoilers.
Full details of our Uprated Brake Kit can be found in V8 BRAKE SYSTEM, and Uprated front/rear Suspension kits under V8 SUSPENSION PACKAGES.

***Note**; your old TR7 rev' counter and radiator is required in exchange for the units that we supply in our conversion kits. Although we don't apply a surcharge, we would ask for your cooperation by returning these items so we can continue the service for other customers.*

TO ORDER: 01522 568000
www.rimmerbros.co.uk

TR8

BASIC CONVERSION KIT CONTENTS

PHOTO SHOWS PARTS COMMON TO ALL 3 CONVERSION KITS. EXHAUST SYSTEM NOT SHOWN.

The components below form the basis of our TR8 conversion kits. There are 3 options available on the exhaust system, please see following page.

QTY	ITEM/DESCRIPTION	PART NO
1	**TR8 Subframe (New)** *(Outright sale)* *Original specification.*	RKC927
1	**Subframe Bolt Kit (Inc Spacers)**	RB7102
1	**Subframe Bush Kit** (Polyurethane)	RB7061P
2	**Engine Mounting Rubbers***	UKC8330
1	**Engine Mounting Bracket* (Rh)**	UKC4227
1	**Engine Mounting Bracket* (Lh)** **Including bolts, nuts, washers.* *Note: mountings/brackets fit behind (not in front of) subframe supports.*	UKC4231
1	**Propshaft (New)** *(Outright sale)* *Including bolts & nuts.*	RKC2890
1	**TR8 Radiator (Recon)** *TR7 radiator required in exchange.*	RKC3114R
1	**Top Hose (Rh)**	UKC7891
1	**Top Hose (Lh)**	GRH629
1	**Bottom Hose**	GRH603
2	**Hose Clips** *(For UKC7891)*	GHC405
4	**Hose Clips** *(For GRH629/603)*	GHC913
2	**Upper Rad' Mounting Brackets**	UKC7988
1	**Lower Rad' Mounting Bracket** *Non A/C type.*	RKC532
4	**Radiator Mounting Bushes**	UKC2225
1	**Heavy Duty Kenlowe Electric Fan Kit (16" fan)**	RS1537
1	**TR7/8 Re-Calibrated Tachometer** *TR7 tachometer required in exchange.*	TKC2587R
1	**Electric Fuel Pump (Standard)** *Includes unions.*	RB7496
1	**TR8 Accelerator Cable**	UKC6482
1	**TR8 Choke Cable**	TKC6742
1	**Stainless Steel Exhaust System (3 Options)** *Inc. tubular manifolds. (Fits both RHD & LHD vehicles).* *Note: to enable correct fitting of manifolds & exhaust system, ensure engine mountings/brackets fit behind (not in front of) subframe support bracket.*	
1	**Exhaust Fitting Kit**	(3 Options)
1	**Uprated 'Big' Brake Kit** *Specially adapted Rover Vitesse 4-pot calipers and special vented brake discs, pads, braided brake hoses, fitting & instructions.* *Note: This kit can not be used with standard 13" TR7 wheels.* *Minimum 14" wheels must be used for internal clearance.* *See road wheels section for details of 14" Minilite Replica wheel sets.*	RB7117
1	**Wiring Diagram**	

TR8 CONVERSION KIT 'A'

WITH PERFORMANCE (LOUD) TWIN PIPE/EXIT EXHAUST SYSTEM.

Kit 'A' includes:
Basic Conversion Kit (as listed on previous page) and a Stainless Steel Exhaust System comprising of Tubular Manifolds, Adaptor Pipes, 'H'-Pipe, Twin Outlet tailpipes & Exhaust Fitting Kit.
See also: V8 exhausts for details of our Exhaust Manifold Insulating wrap.

Conversion Kit 'A' **RB7705**

TR8 CONVERSION KIT 'B'

WITH PERFORMANCE (QUIET) TWIN BOX/EXIT EXHAUST SYSTEM.

Kit 'B' includes:
Basic Conversion Kit (as listed on previous page) and a Stainless Steel Exhaust System comprising of Tubular Manifolds, Adaptor Pipes, Twin Centre Boxes, Twin outlet Tailpipes & Exhaust Fitting Kit.
See also: V8 exhausts for details of our Exhaust Manifold Insulating wrap.

Conversion Kit 'B' **RB7706**

TR8 CONVERSION KIT 'C'

WITH PERFORMANCE (LOUD) SINGLE PIPE/SINGLE OUTLET EXHAUST SYSTEM (LARGE BORE).

Kit 'C' includes:
Basic Conversion Kit (as listed on previous page) and a Stainless Steel Exhaust System comprising of Tubular Manifolds, Large Bore 'Y' Pipe, Link Pipe & Single Outlet Exhaust Box (Race/Rally Spec) & Exhaust Fitting Kit.
See also: V8 exhausts for details of our Exhaust Manifold Insulating wrap.

Conversion Kit 'C' **RB7707**

TO ORDER: 01522 568000
www.rimmerbros.co.uk

TR8
4.6 Litre Convertible

Built in 3 days during the Classic and Sports car show, NEC Birmingham, May 1996.

Just to show how easily it can be done(!), Rimmer Bros staged a TR8 rebuild on the British Motor Heritage stand.

Starting with a fully painted (Bordeaux Red) and prepared bodyshell, the car was assembled over the 3 days using a Rimmer Bros V8 Conversion Kit, modified 4.6 Litre V8, uprated suspension, new interior trim and hood.

The car was completed on time, started (first time!) and driven off the stand by Tony Pond. This photographic record is in memory of him.

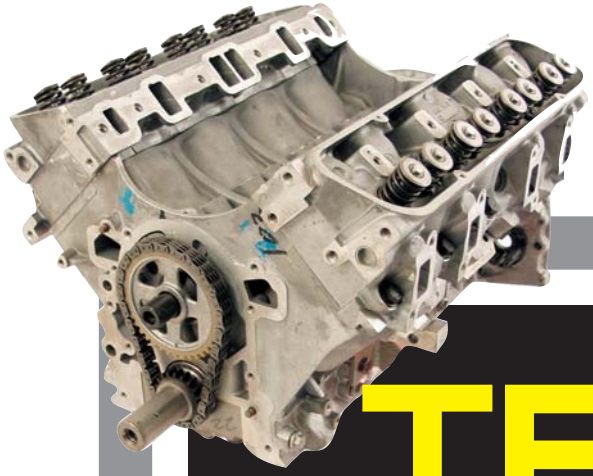

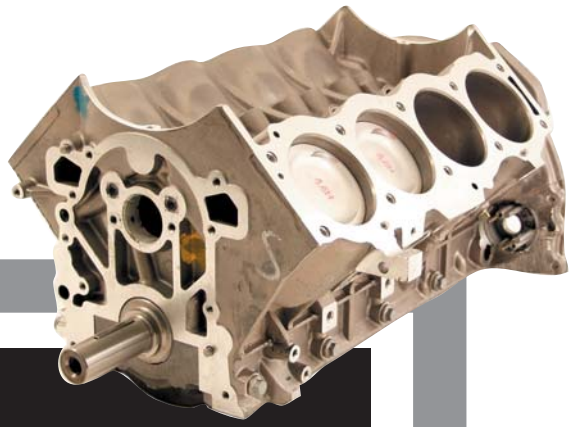

TR8 & TR7-V8 OWNERS

V8 ENGINE & COMPONENTS

This section (page 130 to page 149) covers **MOST** applications for Rover V8 engines, including TR8 & TR7-V8.

We have reproduced a modified version of our **V8 ENGINE CATALOGUE** (edition 2.2) which is very comprehensive.

Please use this section to select the engine or component(s) you need by referring to the relevant description and part number.

Many owners will also find this section useful as a reference when perhaps considering a TR8 conversion using an engine from another vehicle since it covers many different specification combinations dependent upon application.

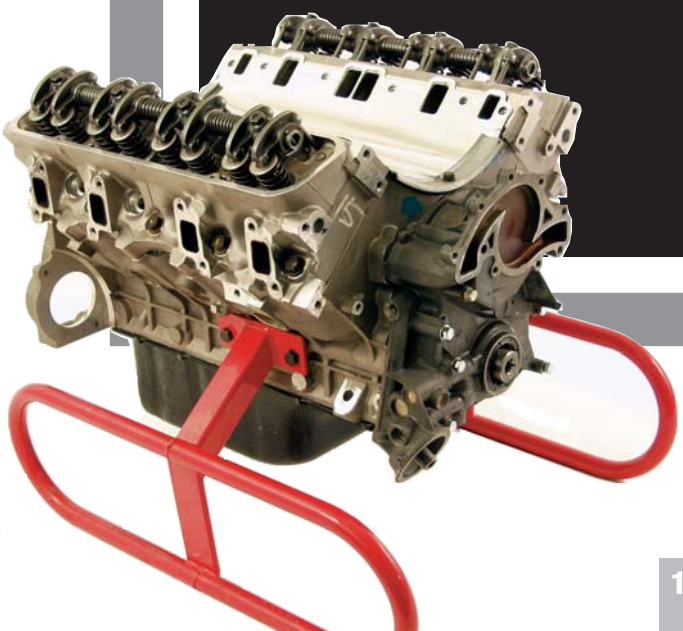

TO ORDER: 01522 568000
www.rimmerbros.co.uk

RIMMER BROS V8

Built by Race Engineers

QUALITY, PERFORMANCE & ENGINEERING EXCELLENCE AT AN AFFORDABLE PRICE.

Engine Definitions

LONG ENGINE

Long engine - *Built-up block & cylinder heads assembly, including crank, rods & pistons, valves, guides & springs (less rocker gear), plus camshaft, followers & timing gear.*

SHORT ENGINE

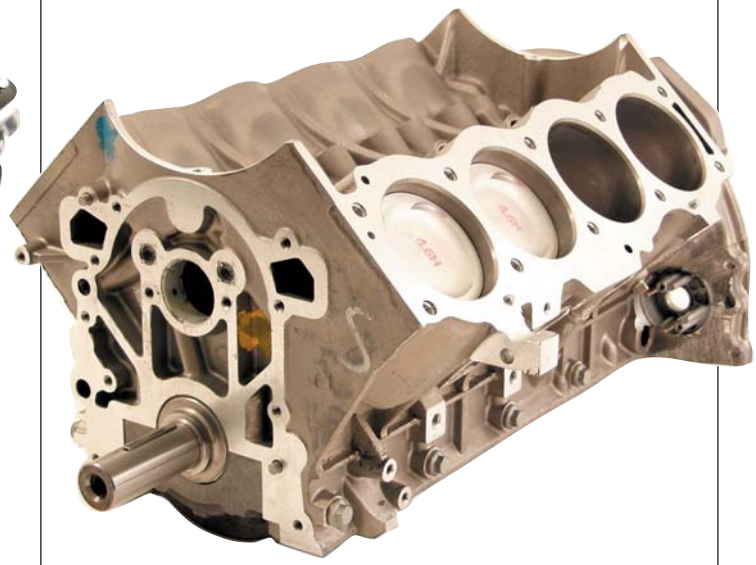

Short engine - *Built-up block assembly, comprising crank, rods & pistons.*

FULL ENGINE

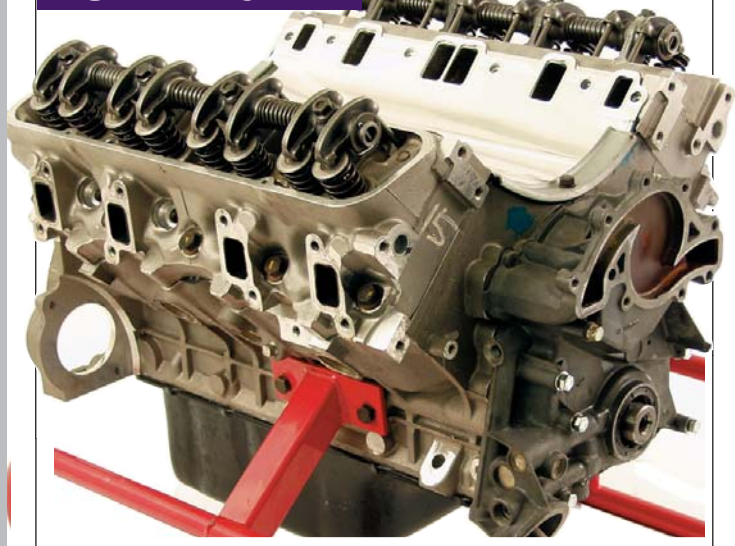

Full engine - *Built-up engine assembly, comprising block (crank, rods & pistons), cylinder heads (valves, guides & springs), camshaft & timing gear, rocker gear, pushrods and fitted sump, timing cover and oil pump. Full engines are either bench-run or dyno tested and built using customers own unit. Prices on application.*

TURN-KEY ENGINE

Turn-key engine - *Ready-to-install, built-up engine assembly, complete with all ancillary components, fuel system & engine mountings. Turn-key engines can also be supplied dyno-run.*
Please contact us for a quotation based on either one of our Standard or Performance Long engines with your choice of fuel system and ancillary components.

Engine Types

All long engines - Standard or Performance - are suitable for all applications - both saloon car (including TR8) and 4x4 vehicles.

Standard *engines are the choice for anyone wishing to replace a worn-out engine with one of a similar type. These engines are a straight swap, enabling the existing ancillary components and fuel system to be retained. Please note that if installing a 'Standard' engine of higher capacity than that fitted, modifications to the fuel system may be required (including ECU if applicable).*

Performance *engines incorporate modifications designed to increase horsepower & torque - such as big-valve cylinder heads and fast-road camshafts - and usually require modifications to the fuel system (including ECU if fitted).*
To gain maximum benefit from our Performance engines, we also recommend fitting tubular manifolds (Sports exhaust system) and K&N air filter(s).

Please note: certain 3.9 & 4.2 litre engines fitted to Range Rover and Discovery models from 1994 onwards are fitted with an "intermediate" type timing cover, incorporating a distributor (as fitted to earlier engines), a crank-driven oil pump and a single, "serpentine" ancillary drive belt. These timing covers require a long-nose crankshaft and are therefore unsuitable for fitting to certain engines. However, they are available to special order at a small additional cost - please inform the sales department at the time of ordering.

ENGINE NUMBER IDENTIFICATION

We have included a reference chart of Rover V8 engine numbers from 1970 onwards, which will help you to identify the engine fitted to your vehicle. The engine number of most Rover V8s is stamped on the left hand side of the block deck, adjacent to the dipstick tube, although some very early engines had the number stamped on the bellhousing flange at the rear of the block. The chart also contains a brief description of features, such as compression ratio and gearbox type and also the approximate year of production. Therefore, if your engine has been changed at some time, it should still be possible to correctly identify it.
To ensure you receive the correct parts, please have your engine number ready before ordering.
Note: "Pulsair" and "Air Injection" are terms applied to engines equipped with Air Rail type cylinder heads; ie cylinder heads with steel pipes located in holes just above the exhaust ports (fitted to carb Range Rover & TR8 engines only). 'Detoxed" refers to a variety of emission control devices - including Air Rails - fitted to carb engines.

ROVER V8 ENGINE NUMBERS

Engine Number	Application	Approximate Year
FACTORY 3.5 LITRE ENGINES		
84000001A	P5 3500 10.5:1cr	
84100001A	P5 3500 10.5:1cr	
84300001A	P5 3500 10.5:1cr	
42500001A	P6 3500 auto 10.5:1cr	1967-1976
42700001A	P6 3500 auto 8.5:1:cr	1967-1976
43000001A	P6 3500S auto 10.5:1:cr	1967-1976
43200001A	P6 3500S auto 8.5:1:cr	1967-1976
45100001A	P6 3500 auto 10.5:1cr	1967-1976
45300001A	P6 3500 auto 8.5:1:cr	1967-1976
45500001A	P6 3500 auto 10.5:1cr	1967-1976
46600001A	P6 3500S auto USA	1967-1976
48100001A	P6 3500S manual 10.5:1:cr	1967-1976
48500001A	P6 3500S manual 10.5:1:cr	1967-1976
10A00001A	SD1 manual 9.35:1cr	1976-1987
11A00001A	SD1 auto 9.35:1cr	1976-1987
12A00001A	SD1 manual 8.13:1cr USA efi	1979-1980
13A00001A	SD1 auto 8.13:1cr USA efi	1979-1980
14A000001A	SD1 auto 8.13:1cr Sweden	1976-1987
15A00001A	SD1 auto 8.13:1cr Australia	1976-1987
16A00001A	SD1 auto 8.13:1cr Japan	1976-1987
17A00001A	SD1 V8S manual 9.35:1cr	1979-1980 *(VDP 1981 on)*
18A00001A	SD1 V8S auto 9.35:1cr	1979-1980 *(VDP 1981 on)*
19A00001A	SD1 manual 8.13:1cr Australia	1976 onwards
20A00001A	SD1 Australia 8.13:1cr efi	1982 onwards
21A00001A	SD1 Australia 8.13:1cr efi	1982 onwards
23A00001A	SD1 manual 8.13:1cr SE/VDP	1982-1987
24A00001A	SD1 auto, air con 8.13:1cr SE/VDP	1982-1987
25A00001A	SD1 manual 8.13:1cr SE/VDP	1982-1987
26A00001A	SD1 auto 8.13:1cr SE/VDP	1982-1987
27A00001A	SD1 manual, air con 8.13:1cr SE	1982-1987 *hot climate*
28A00001A	SD1 auto, air con 8.13:1cr SE	1982-1987 *hot climate*
30A00001A	SD1 Vitesse manual 9.75:1c	1982-1987
31A00001A	SD1 efi auto 9.75:1cr	1982-1987
32A00001A	SD1 Vitesse manual, air con 9.75:1	1982-1987
33A00001A	SD1 efi auto, air con 9.75:1	1982-1987
34A00001A	SD1 Switzerland 9.35:1cr	1982-1987
36A00001A	SD1 Switzerland 9.35:1cr	1982-1987
38A00001A	SD1 factory recon 9.35:1cr	1982-1987
39A00001A	SD1 factory recon 9.35:1cr	1982-1987
10E000001A	TR8 manual8.13:1cr	1980
11E000001A	TR8 auto 8.13:1cr	1980
12E000001A	TR8 federal efi manual 8.13:1cr	1980
13E000001A	TR8 federal efi auto 8.13.:1cr	1980
14E000001A	TR8 manual 8.13:1cr	1980
15E000001A	TR8 auto 8.13:1cr	1980
30A0000	Morgan +8 9.75:1cr efi	
37A0000	Morgan +8 9.75:1cr efi	
48600133A	Morgan +8 9.35:1cr carb	
37A0000	TVR 350i 9.75:1cr efi	
10G00001	Land Rover Stage 1 V8 8.13:1cr	1982
11G00001	Land Rover Stage 1 V8 8.13:1cr	1982
12G00001	Land Rover Stage 1 V8 8.13:1cr	1982
14G00001	Land Rover 90/110 8.13:1cr	1983 on
15G00001	Land Rover 90/110 8.13:1cr	1983 on
19G00001	Land Rover 90/110 Saudi	1983 on
20G00001	Land Rover 90/110 8.13:1cr	1983 on
21G00001	Land Rover 90/110 8.13:1cr	1983 on
22G00001	Land Rover 90/110 Australia	1983 on
24G00001	Land Rover 90/110 8.13:1cr	1983 on
27G00001	Discovery manual, carb 8.13:1cr	1989
22D00001	Discovery manual efi 8.13:1cr	1990
23D00001	Discovery auto efi 8.13:1cr	1990
24D00001	Discovery efi 9.35:1	1990

Engine Number	Application	Approximate Year
35500001C,D,E	R.Rover carb 8.25:1cr	1970-1983
35500001F	R.Rover carb 8.13:1cr	1970-1983
34100001	R.Rover carb 8.25:1cr	1970-1983
35900001A	R.Rover carb CKD 8.25:1cr	1970-1983
39800001F	R.Rover carb Australia 8.13:1cr	1970-1983
11D00001A	R.Rover carb pulsair 9.35cr	1970-1983
13D00001A/B	R.Rover carb auto 8.13cr	1981-1985
15D00001A/B	R.Rover carb pulsair auto 9.35cr	1981-1985
16D00001A/B	R.Rover carb pulsair auto 9.35cr	1981-1985
17D00001A/B	R.Rover carb pulsair manual 9.35cr	1983-1985
18D00001A/B	R.Rover carb manual 8.13cr	1983-1985
19D00001A/B	R.Rover carb pulsair manual 9.35cr	1983-1985
20D00001B	R.Rover carb pulsair manual 8.13cr	1983-1985
21D00001B	R.Rover carb pulsair auto 8.13cr	1983-1985
22D00001	R.Rover/efi manual 8.13:1cr	1986 onwards
23D00001	R.Rover/efi auto 8.13:1cr	1986 onwards
24D00001	R.Rover/efi manual 9.35:1cr	1986 onwards
25D00001	R.Rover efi auto 9.35:1cr	1986 onwards
26D00001	R.Rover carb manual 9.35:1cr	1986 onwards
27D00001	R.Rover carb auto 8.13:1cr	1986 onwards
28D00001	R.Rover carb manual 8.13:1cr	1986 onwards
29D00001	R.Rover carb auto 8.13:1cr	1986 onwards
30D00001	R.Rover carb manual 8.13:1cr	1986 onwards
31D00001	R.Rover efi 8.13:1cr 8.13:1cr	1986 onwards
FACTORY 3.9 LITRE ENGINES		
47A00001	Morgan +8 9.35:1cr efi	
37A40P0000	TVR Chimaera 9.80:1cr efi	
47A40P0000	TVR Chimaera 9.80:1cr efi	
30G00001	Land Rover Defender Japan 9.13:1cr efi	
31G00001	Land Rover Defender 50LE efi auto	
35D00001	R.Rover/Discovery efi manual 9.35:1cr	1988 onwards
36D00001	R.Rover/Discovery efi auto 9.35:1cr	1988 onwards
37D00001	R.Rover/Discovery efi manual 8.13:1cr	1988 onwards
38D00001	R.Rover/Discovery efi auto 8.13:1cr	1988 onwards.
FACTORY 4.2 LITRE ENGINE		
40D00001	R.Rover 4.2efi 8.94:1cr	1992 onwards
FACTORY 4.0 LITRE ENGINES		
42D00001A	S2 R.Rover4.0 efi HC	1994-2002
44D00001A	S2 R.Rover4.0 efi LC	1994-2002
57D00001A	S2 R.Rover4.0 efi LC	1998-2002
58D00001A	S2 R.Rover4.0 efi HC	1998-2002
92D00001A	S2 R.Rover Canada 4.0 efi LC	1998-2002
95D00001A	S2 R.Rover NAS 4.0 efi HC	1998-2002
FACTORY 4.6 LITRE ENGINES		
46D00001A	S2 R.Rover4.6 efi HC	1994-2002
48D00001A	S2 R.Rover4.6 efi LC	1994-2002
59D00001A	S2 R.Rover 4.6 efi LC	1998-2002
60D00001A	S2 R.Rover 4.6 efi HC	1998-2002
93D00001A	S2 R.Rover Canada 4.6 efi LC	1998-2002
96D00001A	S2 R.Rover NAS 4.6 efi HC	1998-2002
MISCELLANEOUS ENGINES		
S46D0000A	Morgan +8 9.35:1cr efi	
37A50P0000	TVR Griffith/Chimaera 500 10:1cr efi	
47A43P0000	TVR Griffith 4.3 efi	
47A50P0000	TVR Chimaera 500 10:1cr efi	
47G50P0000	Sherpa 3.5	

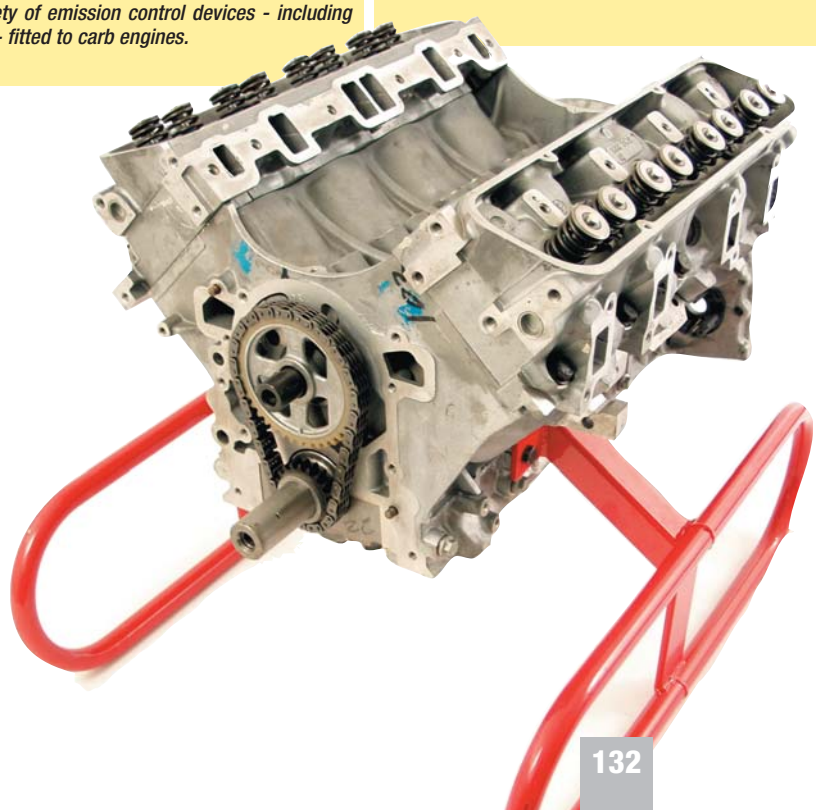

ENGINE *fitting* SERVICE
We are pleased to be able to offer a fitting service for either our full or short engines. Please contact us for a quotation or to discuss your requirements.
OUR CHARGES ARE VERY REASONABLE!

Engine Cradles

All engine assemblies are bolted to a steel cradle, for ease of handling and to minimise the risk of damage whilst in transit.
There is a surcharge for the cradle, refundable on its return. When returning an exchange engine, use the cradle for sending the old unit back and we will then refund both surcharges together.
Engine cradles can also be bought outright.

Engine cradle - Part No. **S005000EC**

TO ORDER: 01522 568000
www.rimmerbros.co.uk

Description | Qty Req. | Part No.

V8 Engines - Standard 'Long' Units

ALL APPLICATIONS.
Supplied less timing cover, sump, & rocker gear.
Exchange unit must be 'Like for Like'.
Surcharge will only be refunded upon receipt & inspection of suitable old unit.

3.5 Litre Long Engine (1) **RB8000R**
Exchange.
Includes recon block, small journal crank (short keyway), 3/3 cylinder heads, cam, followers and timing gear.

Installation Kit (1) **RB8003**
Includes oil, filter, gaskets etc.

3.9 Litre Long Engine (1) **RB8001R**
Exchange.
Includes recon/relinered block (not cross bolted), small journal crank (long keyway), 3/4 cylinder heads, cam, followers and timing gear.

Installation Kit (1) **RB8003**
Includes oil, filter, gaskets etc.

4.0 Litre Long Engine

GEMS' type (1) **ERR5012STRG**
Exchange.
Suitable for Series 2 (P38A) Range Rover/Discovery/TVR/Morgan etc ('95 on).

Non 'GEMS' type (1) **ERR5012STRNG**
Exchange.
*Suitable for all **Non** Series 2 (P38A) Range Rover/Discovery/TVR/Morgan etc (to '95).*

IDENTIFICATION: 'GEMS' Efi uses a crank sensor pick-up on rear of engine block (1995 on).
SPECIFICATION: Exchange. Rebuilt large journal cross bolted block with 'Top Hat' liners, large journal crank, cylinder heads, cam, followers and timing gear. Crank spacer STC1893SPACER is required for non-serpentine timing covers.

Installation Kit (1) **RB8003**
Includes oil, filter, gaskets etc.

4.6 Litre Long Engine

GEMS' type (1) **ERR5013STRG**
Exchange.
Suitable for Series 2 (P38A) Range Rover/Discovery/TVR/Morgan etc ('95 on).

Non 'GEMS' type (1) **ERR5013STRNG**
Exchange.
*Suitable for all **Non** Series 2 (P38A) Range Rover/Discovery/TVR/Morgan etc (to '95).*

IDENTIFICATION: 'GEMS' Efi uses a crank sensor pick-up on rear of engine block (1995 on).
SPECIFICATION: Exchange. Rebuilt large journal cross bolted block with 'Top Hat' liners, large journal crank, cylinder heads, cam, followers and timing gear. Crank spacer STC1893SPACER is required for non-serpentine timing covers.

Installation Kit (1) **RB8003**
Includes oil, filter, gaskets etc.

All long engines, including 4.6 litre, are suitable as direct replacements (as appropriate) for any Rover V8 engine. However, modifications to the fuel system (including ECU if fitted) may be required when replacing a 3.5 or 3.9 litre engine with a larger capacity unit.
*All **Standard** engines are compatible with unleaded petrol/lpg and are bench run.*
For manual transmission vehicles, we recommend fitting a new clutch while the engine is being replaced.

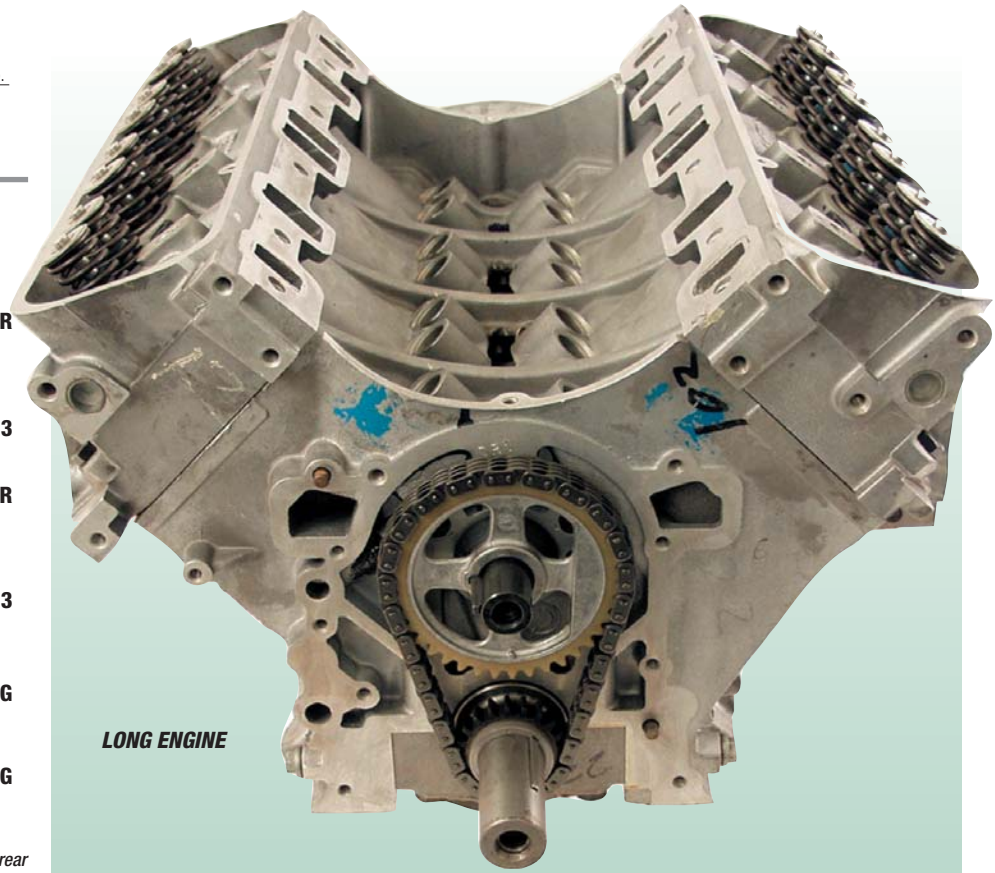

LONG ENGINE

IMPORTANT NOTES - LONG & FULL ENGINES

Please note the following important points regarding engine assembly:

Long Engine Build-up.
These engines are supplied less rocker gear, pushrods, sumps & timing covers. It is absolutely essential that these items are checked, cleaned and correctly assembled prior to running your engine.
Check for wear on the underside of rocker shafts, on either side of the pedestals.
Check for wear on the valve tips of rocker arms.
Check pushrods for straightness and equal length.
Clean the sump and oil pick-up pipe.
Clean the timing cover and check the oil pump housing for wear and damage.
Replace all seals and gaskets.
If in any doubt, always replace with new components.

Long & Full Engines - Ancillary Components.
If you are re-fitting ancillary components - water pump, alternator, distributor, carburettors or fuel injection - check that they are suitable for re-using. We recommend having carburettors serviced and fuel injectors cleaned/replaced before re-fitting.

The cooling system - including the radiator and heater - should be flushed through with clean water and the hoses checked before re-using.
The correct ratio (minimum 33%) of antifreeze must be maintained at all times.
Oil coolers should be flushed of old engine oil.
Engine & gearbox mountings should be checked and renewed as necessary.
The clutch operating system should be checked for wear.
Rocker covers should be cleaned internally.

All engines - oil pump priming.
*All engines **not** fitted with crank-driven oil pumps should have their oil pumps primed before initial start-up. Please consult a workshop manual for this procedure.*

Failure to observe these points may lead to engine damage and may also invalidate the engine's warranty.

V8 Engines - Standard 'Full' Units

We will be pleased to recondition customer's own units to 'full' engine specification on request and can quote to do so on an individual basis.

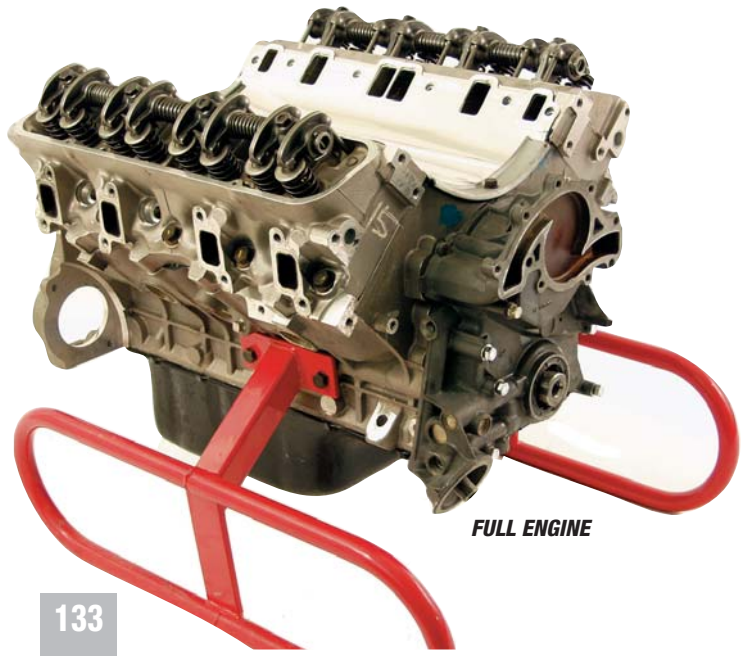

FULL ENGINE

Description Qty Req. Part No.

V8 Engines - Performance 'Long' Units

Performance Long *engines are available in 4.0, 4.6, 4.8 & 5.2 litre capacities, giving a broad range of power and torque outputs to suit every budget. They are built to an extremely high specification, which guarantees maximum power and long life. Please note: specifications can be altered to suit your individual requirements - from ultra-big valve cylinder heads and solid-lifter camshafts to full turn-key Performance engines - phone us to discuss your needs.*

Performance Engine Basic Specifications

All Performance Long engines are built around a rebuilt cross-bolted, large-journal block; all feature a Performance camshaft (the type depends on the intended application) and double roller timing chain sets. Finally, Performance engines are all fitted with fully ported and polished, big valve cylinder heads, to Stage 3 specification or above (See ***Performance Cylinder Heads*** *for details).*

Performance 'Long' engine;
See our ***Power Outputs*** *table, right.*

ALL APPLICATIONS.
Supplied less timing cover, sump, & rocker gear.
Exchange unit must be 'Like for Like'.
Surcharge will only be refunded upon receipt & inspection of suitable old unit.

4.0 Litre Performance Long Engine (1)**RB8004R**
Exchange.
Please specify if 'GEMS' or Non 'GEMS' block required and intended vehicle application. Rebuilt large journal cross bolted block with 'Top Hat' liners, large journal crank, cylinder heads, cam, followers and timing gear. Crank spacer STC1893SPACER is required for non-serpentine timing covers.
Note: all units neutrally balanced. Crank pulley & flywheel can also be balanced at extra cost.

Installation Kit (1) **RB8003**
Includes oil, filter, gaskets etc.

4.6 Litre Performance Long Engine (1) **RB8005R**
Exchange.
Please specify if 'GEMS' or Non 'GEMS' block required and intended vehicle application. Rebuilt large journal cross bolted block with 'Top Hat' liners, large journal crank, cylinder heads, cam, followers and timing gear. Crank spacer STC1893SPACER is required for non-serpentine timing covers.
Note: all units neutrally balanced. Crank pulley & flywheel can also be balanced at extra cost.

Installation Kit (1) **RB8003**
Includes oil, filter, gaskets etc.

4.8 Litre Performance Long Engine (1) **RB8006R**
Exchange.
Please specify if 'GEMS' or Non 'GEMS' block required and intended vehicle application. Rebuilt large journal cross bolted block with 'Top Hat' liners, large journal crank, cylinder heads, cam, followers and timing gear. Crank spacer STC1893SPACER is required for non-serpentine timing covers.
Note: all units neutrally balanced. Crank pulley & flywheel can also be balanced at extra cost.

Installation Kit (1) **RB8003**
Includes oil, filter, gaskets etc.

5.2 Litre Performance Long Engine (1) **RB8007R**
Exchange.
Please specify if 'GEMS' or Non 'GEMS' block required and intended vehicle application. Rebuilt large journal cross bolted block with 'Top Hat' liners, large journal crank, cylinder heads, cam, followers and timing gear. Crank spacer STC1893SPACER is required for non-serpentine timing covers.
Note: all units neutrally balanced. Crank pulley & flywheel can also be balanced at extra cost.

Installation Kit (1) **RB8003**
Includes oil, filter, gaskets etc.

All long engines, including 5.2 litre, are suitable as direct replacements (as appropriate) for any Rover V8 engine. However, modifications to the fuel system (including ECU if fitted) may be required when replacing a 3.5 or 3.9 litre engine with a larger capacity unit.
All ***Performance*** *engines are compatible with unleaded petrol and lpg.*
For manual transmission vehicles, we recommend fitting a new clutch while the engine is being replaced.

Description Qty Req. Part No. Description Qty Req. Part No.

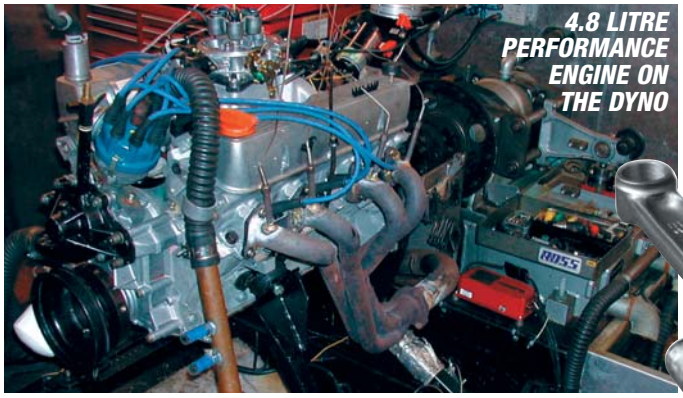

4.8 LITRE PERFORMANCE ENGINE ON THE DYNO

FORGED PISTON & H-BEAM CON ROD

Power Outputs

The table below is a guide to typical power & torque outputs of our range of V8 Full engines.
Please note that these figures are intended only as an indication of the performance potential of each engine. In reality, power figures may vary considerably depending on final application; choice of induction system, exhaust and intended RPM range all have a significant effect on final power output.
To achieve the required power, it may be necessary to modify the fuel system - particularly on fuel injection engines. See ***Fuel*** *section for details, or speak to our* ***Sales Department*** *for advice.*
Each Performance Full engine is supplied with a dyno test sheet, giving actual power figures obtained on the dyno. All Long engines are bench run.

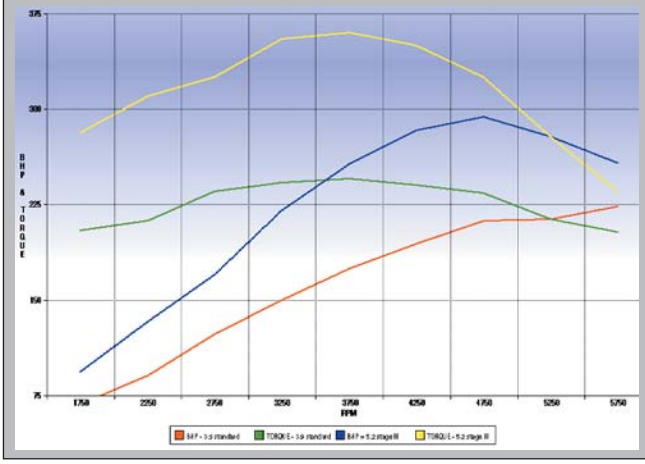

Standard Engines	PEAK POWER	PEAK TORQUE
3.5 litre	165 bhp	190 lb/ft
3.9 litre	200 bhp	240 lb/ft
4.6 litre	220 bhp	290 lb/ft

Performance Engines		
4.0 litre	250 bhp	260 lb/ft
4.6 litre	260 bhp	300 lb/ft
4.8 litre	290 bhp	330 lb/ft
5.2 litre	310 bhp	350 lb/ft

NOTES - ENGINE BALANCING

All Performance engines are dynamically balanced (ie their rotating components are balanced individually and not as one assembly). The benefit of balancing in this way is that individual components can be replaced, if need be, without upsetting the balance of the whole engine.
However, the benefits of balancing the engine are lost if any of the associated rotating parts are not also balanced; therefore, we strongly recommend that your crankshaft pulley and flywheel (manual transmission vehicles) are neutrally balanced before being fitted to your engine.

As there are numerous variations of crankshaft pulley and flywheel, the easiest way to make sure you have the correct, balanced components for your needs is to send us your original crank pulley and flywheel for balancing at the time of placing your engine order. These items will then be balanced (at extra cost) and returned to you with your engine.

VERNIER TIMING CHAIN SET

V8 Full Engines - Performance

We will be pleased to recondition customer's own units to 'full' engine specification on request and can quote to do so on an individual basis.

BIG VALVES

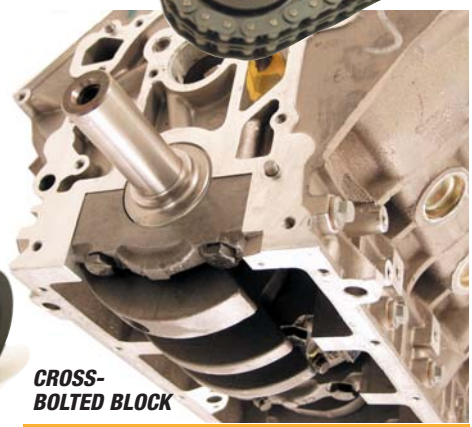

CROSS-BOLTED BLOCK

TO ORDER: 01522 568000
www.rimmerbros.co.uk

Description Qty Req. Part No.

V8 Short Engines

Short engines are sold on an exchange basis. The old unit must be a suitable type (1980 onwards) otherwise a surcharge will apply.

3.5 litre - new short engine
Comprises new block/crank/bearings/pistons/rods (assembled). Less cam & followers.

low compression (8.13:1)	(1)	**ETC7714**
high compression (9.35:1)	(1)	**RB7121**

3.5 litre - recon short engine
Comprises recon block, rebored with new pistons/cam bearings/reground crank & new bearings (assembled). Less cam & followers.

low compression (8.13:1)	(1)	**ETC7714R**
high compression (9.35:1)	(1)	**RB7121R**

3.9 litre - new short engine (1) **RB7487**
Comprises new block/crank/bearings/pistons/rods (assembled). Less cam & followers.

3.9 litre - recon short engine (1) **RB7487R**
Comprises recon block, relinered with new pistons/rings/cam bearings/reground crank & new bearings (assembled). Less cam & followers.

3.9 litre - uprated short engine (1) **RB7487UR**
Comprises recon, large journal block, cross-bolted & ARP mains studs. Crank/rods & pocketed pistons. Lightened & balanced assembly. Less cam & followers.

4.2 litre - short engine (1) **ERR4171**
Comprises block/crank/bearings/pistons/rods (assembled). Less cam & followers.

4.0 litre - new short engine
Series 2 Range Rover application.
NB. Unsuitable for use with pre '95 heads as low compression ratio results.
Large journal, cross-bolted type.
Comprises new block/crank/bearings/pistons/rods (assembled). Less cam & followers.

low compression* (8.13:1)	(1)	**STC1890**
high compression* (9.35:1)	(1)	**STC1891**

**Please see Note regarding "Compression Ratios - Cylinder Heads & Short Engines", right.*

4.6 litre - new short engine
Series 2 Range Rover application.
NB. Unsuitable for use with pre '95 heads as low compression ratio results.
Large journal, cross-bolted type.
Comprises new block/crank/bearings/pistons/rods (assembled). Less cam & followers.
When using this short engine to replace earlier type (3.5 or 3.9) engines, a crank spacer - part no. STC1893SPACER - may be required. Please enquire for details.
Sump pan may also require relieving to allow swing clearance for front web of crank.

low compression* (8.13:1)	(1)	**STC1892**
high compression* (9.35:1)	(1)	**STC1893**

**Please see Note "Compression Ratios - Cylinder Heads & Short Engines", right.*

4.6 litre - rebuilt short engine - high compression
Pre-Series 2 Range Rover applications.
Suitable for use with pre-Series 2 Range Rover cylinder heads (see Notes "Compression Ratios, Cylinder Heads & Short Engines", right).
Large journal, cross-bolted type.
Comprises rebuilt block/crank/bearings/pistons/rods (assembled). Less cam & followers.
When using this short engine to replace earlier type (3.5 or 3.9) engines, a crank spacer - part no. STC1893SPACER - may be required. Please enquire for details.
Sump pan may also require relieving to allow swing clearance for front web of crank.

high compression* (1) **STC1893HCR**
**Please see Note regarding "Compression Ratios, Cylinder Heads & Short Engines".*

4.8 litre - rebuilt short engine (1) **RB7676R**
Comprises rebuilt large journal, cross-bolted block & long stroke (86mm) crank. ARP mains studs, new pistons & rings. Less cam & followers.
When using this short engine to replace earlier type (3.5 or 3.9) engines, a crank spacer - part no. STC1893SPACER - may be required. Please enquire for details.
Sump pan may also require relieving to allow swing clearance for front web of crank.

5.2 litre - rebuilt short engine (1) **RB7682R**
Comprises rebuilt large journal, cross-bolted block, fitted with special 96mm bore liners, long stroke (90mm) cross-drilled crank, steel rods & new pistons (90mm stroke). Lightened & balanced assembly. Less cam & followers.
When using this short engine to replace earlier type (3.5 or 3.9) engines, a crank spacer - part no. STC1893SPACER - may be required. Please enquire for details.
Sump pan may also require relieving to allow swing clearance for front web of crank.

Description Qty Req. Part No. Description Qty Req. Part No.

IMPORTANT NOTES - SHORT ENGINES

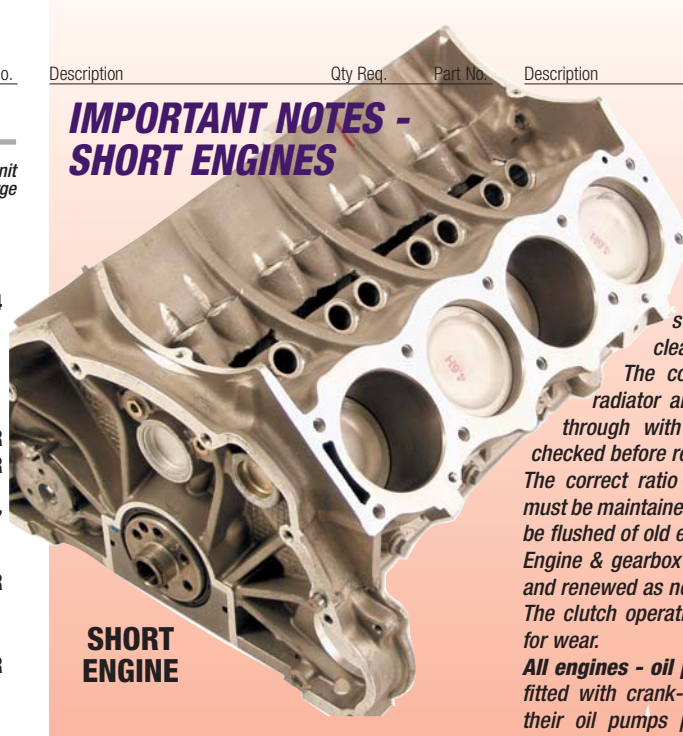

SHORT ENGINE

SHORT ENGINE BUILD-UP
When building up a short engine to a complete assembly, it is essential to thoroughly examine every part you intend to re-use. We recommend that you pay special attention to the camshaft, followers, pushrods & rocker gear, checking carefully for signs of wear; re-using worn parts is false economy and you risk contaminating your new engine with abrasive particles.
The following parts MUST be meticulously cleaned prior to fitting:
- *sump & oil pick-up pipe*
- *timing cover & oil pump assembly*
- *cylinder heads*
- *rocker covers*

Failure to observe these points may lead to engine damage and may invalidate the engine's warranty.

Short Engines - Ancillary Components. *If you are re-fitting ancillary components - water pump, alternator, distributor, carburettors or fuel injection - check that they are suitable for re-using. We recommend having carburettors serviced and fuel injectors cleaned/ replaced before re-fitting.*
The cooling system - including the radiator and heater - should be flushed through with clean water and the hoses checked before re-using.
The correct ratio (minimum 33%) of antifreeze must be maintained at all times. Oil coolers should be flushed of old engine oil.
Engine & gearbox mountings should be checked and renewed as necessary.
The clutch operating system should be checked for wear.
All engines - oil pump priming. *All engines not fitted with crank-driven oil pumps should have their oil pumps primed before initial start-up. Please consult a workshop manual for this procedure.*

TIMING COVERS
If the timing cover you intend to fit to your short engine incorporates a crank-driven oil pump, please inform the Sales Department at the time of ordering (3.5 & 3.9 litre Standard Short Engines only).
Uprated 3.9 litre Short engines, as well as all Short Engines of 4.0 litres and above, are suitable for timing covers which incorporate crank-driven oil pumps. If fitting the earlier type of timing cover - with camshaft-driven oil pump - to a short engine of 4.0 litres or above, please also request crank spacer, part no. ***STC1893SPACER****, which will ensure the crankshaft pulley is securely fitted.*
If in any doubt, a member of our Sales Department will be pleased to help you.

COMPRESSION RATIOS - CYLINDER HEADS & SHORT ENGINES

There are various different Rover V8 cylinder heads available, with different combustion chamber sizes, giving a variety of compression ratios when fitted to a short engine. Therefore, you will need to know the combustion chamber size of the cylinder heads that you intend to use in order to be able to calculate the engine's compression ratio.
As a general rule, cylinder heads up to the introduction of Series 2 Range Rover (1994) have approximately 34-36cc combustion chambers. From the introduction of Series 2 Range Rover (4.0 & 4.6 litre engines), they have approximately 28cc combustion chambers (If in doubt, cylinder heads fitted to 4.0 & 4.6 litre engines have only two rows of cylinder head bolts; earlier engines have three rows).
Refer to the table below of Short Engine & Cylinder Head Applications for more detailed information.
This information does not take into account any machining work done on the cylinder heads in the past.
In certain circumstances, it may be cheaper to purchase a pair of reconditioned cylinder heads than to try to match a pair of unknown heads to a Short Engine. Alternatively, it may be worth considering a Full Engine, which is supplied complete with fitted cylinder heads.

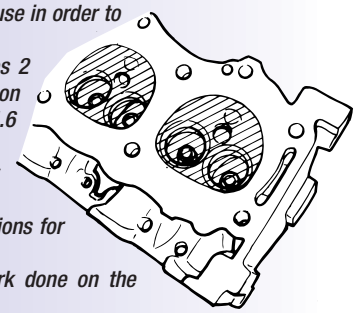

COMBUSTION CHAMBERS

SHORT ENGINE & CYLINDER HEAD APPLICATIONS

SHORT ENGINE	ENGINE TYPE	SWEPT VOL/CYL	CC @ TDC	HEADS REQUIRED	HEAD GASKETS
ETC7714/R	3.5 STD 8.13cr	441.51	25	34-36cc	Std
RB7121/R	3.5 STD 9.35cr	441.51	15	34-36cc	Std
RB7487/R	3.9 STD 9.35cr	494	23	34-36cc	Std
RB7487UR	3.9 STD 9.35cr	494	23	34-36cc	Std
ERR4171/R	4.2 8.94cr	534.81	29	34-36cc	Std
STC1890	4.0 STD 8.13cr	494	33	28cc	Comp
STC1891	4.0 STD 9.35cr	494	23	28cc	Comp
STC1892	4.6 STD 8.13cr	569.62	44	28cc	Comp
STC1893	4.6 STD 9.35cr	569.62	31	28cc	Comp
STC1893HC	4.6 HI COMP	569.62	29	34-36cc	Std

Description Qty Req. Part No. Description Qty Req. Part No. Description Qty Req. Part No.

NOTES - CYLINDER HEAD IDENTIFICATION

See also: 'Compression Ratios - Cylinder Heads & Short Engines' page 135.

There are various types of cylinder heads available for the Rover V8, with only subtle differences between them. Not all are suitable for every application, so care must be taken when ordering replacement heads for your vehicle. Please note that reconditioned cylinder heads are only sold on an exchange basis (in pairs) and that we require similar type cylinder heads in return, otherwise a surcharge will apply.

Early Cylinder Heads

Early cylinder heads - as fitted to Rover P5B, P6, MGB V8 and early Range Rover - are fitted with small (38mm inlet, 33mm exhaust) valves and may not be suitable for use with unleaded fuel. These heads can be identified most easily by removing one of the spark plugs and measuring the length of the threaded section of the plug. If it measures 12.5mm, the cylinder head is an early type and is ***not suitable for exchange****. If it measures 19mm, the cylinder head is post-1976 (SD1 or later).*

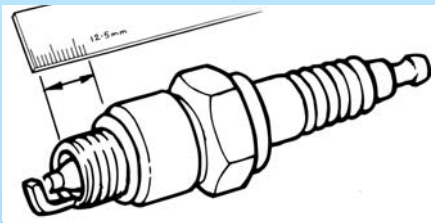

Later Cylinder Heads

Identify later cylinder heads as follows:

1. *Count the rows of cylinder head bolts. All cylinder heads have a row of head bolts inside the rocker covers; they also have a second row of 5 head bolts just below the spark plugs. Finally, cylinder heads up to around 1994 have a third row of 4 bolts just below the second row.*

3.9, 4.2, 4.0 & 4.6 litre engines after this period have a total of two rows of head bolts.

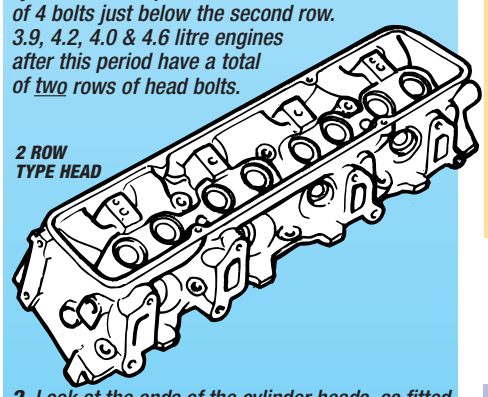

2. *Look at the ends of the cylinder heads, as fitted to the engine. There are tapped holes in the ends of each cylinder head, to which the ancillary component brackets are bolted. The number of holes determines which type you have, as follows:*

3/3 bolt (3 bolt holes in each head)
3/4 bolt (3 bolt holes in one head, 4 in the other)
4/4 bolt (4 bolt holes in each head)

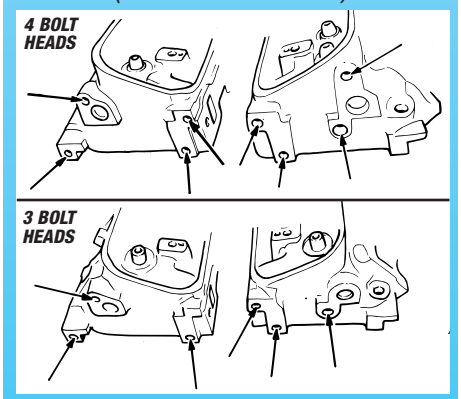

It is important that the cylinder heads you order are similar to the ones you have removed, otherwise your ancillary components may not fit.

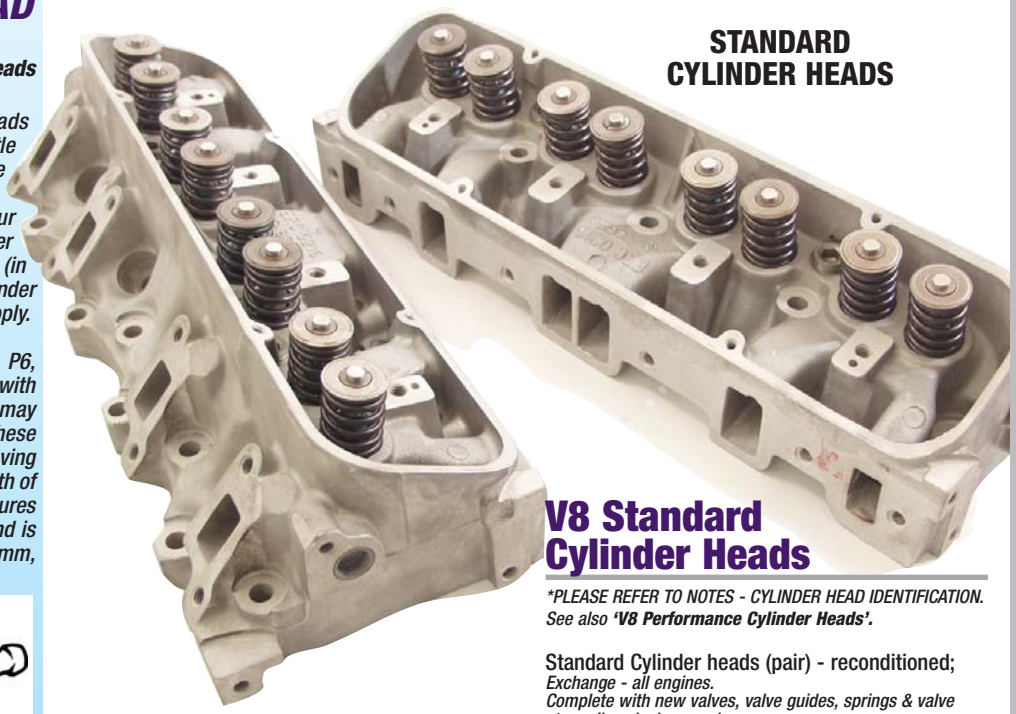

STANDARD CYLINDER HEADS

V8 Standard Cylinder Heads

PLEASE REFER TO NOTES - CYLINDER HEAD IDENTIFICATION. See also* *'V8 Performance Cylinder Heads'.***

Standard Cylinder heads (pair) - reconditioned;
Exchange - all engines.
Complete with new valves, valve guides, springs & valve stem oil seals. Less rocker gear.
Reconditioned cylinder heads are sold only in matching pairs, with the actual combustion chamber size marked on them.

with 3 rows of head bolts
Pre-'95 applications. 34-36cc combustion chambers.

3/3 end bolt type	(pr)	**RB7095RA**
3/4 end bolt type	(pr)	**RB7095RB**
4/4 end bolt type	(pr)	**RB7095RC**
with 2 rows of head bolts	(pr)	**RB7095RD**

'95-on applications. 28cc combustion chambers. All 4/4 end bolt.

Standard cylinder heads are sold on an exchange basis: the old units must be serviceable and of a suitable type otherwise a surcharge will apply. If preferred, we can recondition your existing cylinder heads. Please note that early type (pre 1976) heads are not suitable as exchange units - please refer to 'Notes Cylinder Heads Identification'.

Cylinder heads - new
Due to the numerous variations of cylinder heads and the complexity of part number supersessions, it would be too complicated to list a full range of new cylinder heads in this catalogue. However, if you require ***new*** *cylinder heads, please contact our Sales Department for price & availability.*

CYLINDER HEAD SPECIFICATION

All our cylinder heads - both Standard and Performance types - are based on late-type (19mm spark plug) head castings. All are compatible with unleaded fuel and LPG and are suitable for carb or efi applications.

Dyno graph showing the power & torque of a 4.6 litre engine fitted with standard heads, then the same 4.6 engine fitted with a mild road camshaft and Stage 3 cylinder heads.

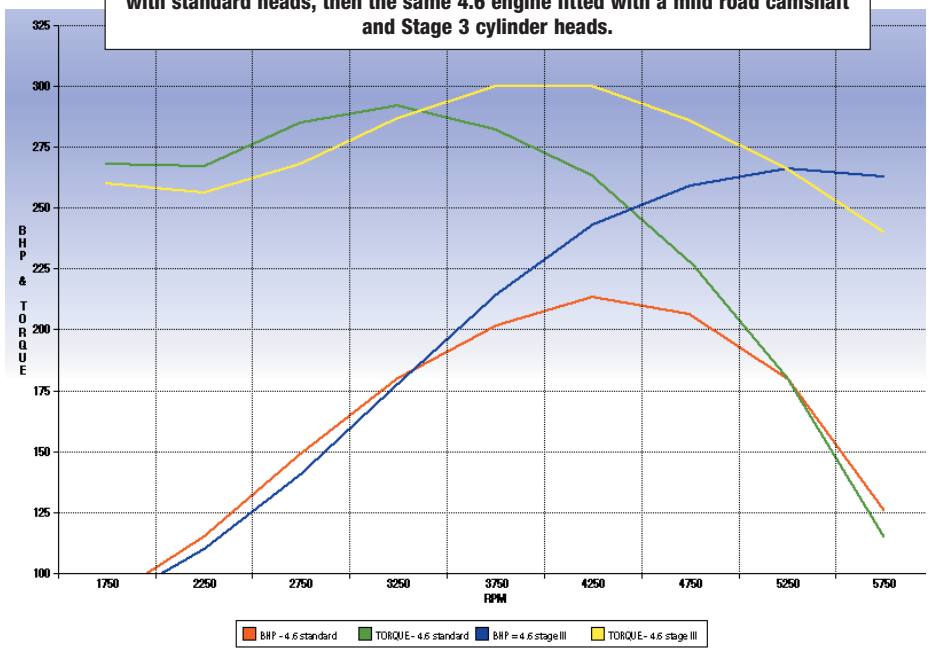

TO ORDER: 01522 568000
www.rimmerbros.co.uk

Description Qty Req. Part No. Description Qty Req. Part No. Description Qty Req. Part No.

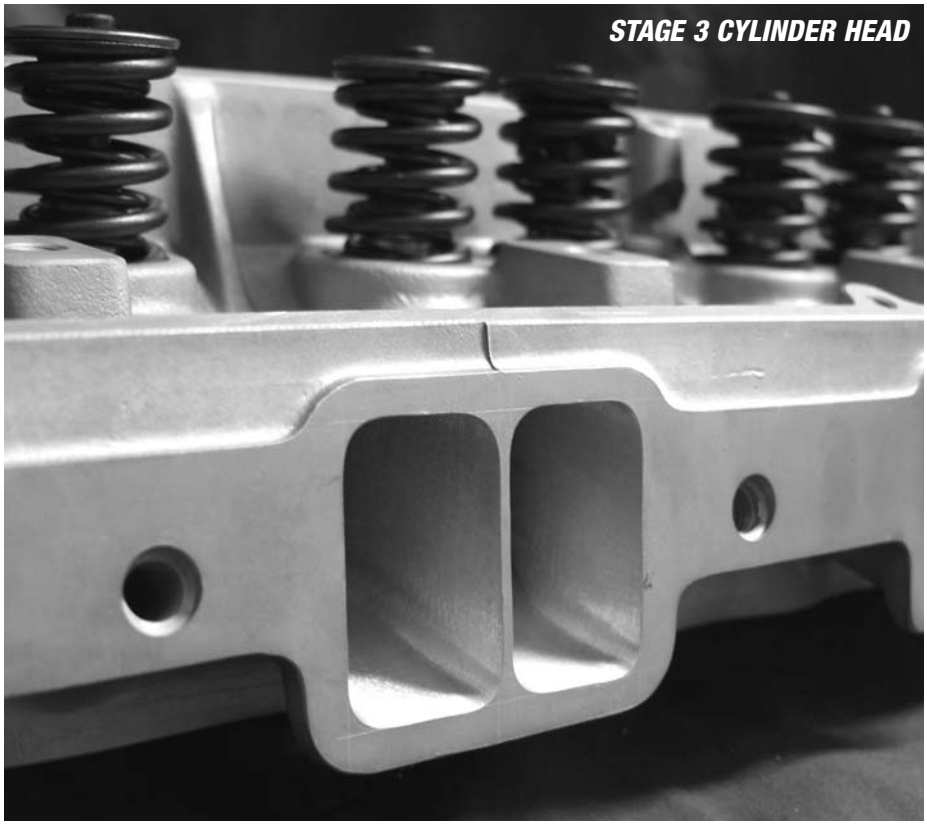

V8 Performance Cylinder Heads

We offer three stages of modified Performance cylinder head, designed to suit different requirements and budgets.

Stage 1 - *polished and lightly ported cylinder heads featuring bulleted guides and standard size valves.*
Suitable for standard and mildly tuned 3.5 to 4.6 litre engines.

Stage 3 - *fully polished & ported, gas-flowed cylinder heads, featuring bulleted & shortened guides and fitted with Big Valves (41.45mm inlet, 36.5mm exhaust).*
Together with the right camshaft and fuel system, these heads offer a substantial power and torque increase, and are suitable for Performance engines up to 5.2 litres. See Comparison Chart, previous page.

Stage 4 - *Ultra Big Valve heads. Fully polished & ported as Stage 3, but featuring 43.11mm inlet and 38.1mm exhaust valves.*
These cylinder heads are suitable for serious Performance applications, in engines of 4.6 litres and above, and require suitably modified fuel systems.

Performance cylinder heads (pair);
Please refer to 'Notes - Cylinder Head Identification'.
Exchange - all engines.
Complete with new valves, valve guides, springs & valve stem oil seals. Less rocker gear.
Performance cylinder heads are sold only in matching pairs, with the actual combustion chamber size marked on them.

Stage 1
with 3 rows of head bolts
Pre - '95 applications. 34-36cc combustion chambers.
3/3 end bolt type (1) **RB7467R S1A**
3/4 end bolt type (1) **RB7467R S1B**
4/4 end bolt type (1) **RB7467R S1C**
with 2 rows of head bolts(1) **RB7467R S1D**
'95 on applications. 28cc combustion chambers.
4/4 end bolt type.

Stage 3
with 3 rows of head bolts
Pre - '95 applications. 34-36cc combustion chambers.
3/3 end bolt type (1) **RB7467R S3A**
3/4 end bolt type (1) **RB7467R S3B**
4/4 end bolt type (1) **RB7467R S3C**
with 2 rows of head bolts(1) **RB7467R S3D**
'95 on applications. 28cc combustion chambers.
4/4 end bolt type.

Stage 4
with 3 rows of head bolts
Pre - '95 applications. 34-36cc combustion chambers.
3/3 end bolt type (1) **RB7467R S4A**
3/4 end bolt type (1) **RB7467R S4B**
4/4 end bolt type (1) **RB7467R S4C**
with 2 rows of head bolts(1) **RB7467R S4D**
'95 on applications. 28cc combustion chambers.
4/4 end bolt type.

Performance cylinder heads are sold on an exchange basis: the old units must be serviceable and of a suitable type otherwise a surcharge will apply. If preferred, we can modify your existing cylinder heads. Please note that early type (pre 1976) heads are not suitable as exchange units - please refer to 'Notes Cylinder Heads Identification'.

SHORT ENGINE & CYLINDER HEAD APPLICATIONS

SHORT ENGINE	ENGINE TYPE	SWEPT VOL/CYL	CC @ TDC	HEADS REQUIRED	HEAD GASKETS
ETC7714/R	3.5 STD 8.13cr	441.51	25	34-36cc	Std
RB7121/R	3.5 STD 9.35cr	441.51	15	34-36cc	Std
RB7487/R	3.9 STD 9.35cr	494	23	34-36cc	Std
RB7487UR	3.9 STD 9.35cr	494	23	34-36cc	Std
ERR4171/R	4.2 8.94cr	534.81	29	34-36cc	Std
STC1890	4.0 STD 8.13cr	494	33	28cc	Comp
STC1891	4.0 STD 9.35cr	494	23	28cc	Comp
STC1892	4.6 STD 8.13cr	569.62	44	28cc	Comp
STC1893	4.6 STD 9.35cr	569.62	31	28cc	Comp
STC1893HC	4.6 HI COMP	569.62	29	34-36cc	Std

V8 Head Gaskets

Head gasket set - V8;
3.5 litre (88.9mm bore)
tin head gaskets
to 1976 (pre SD1) (1) **GEG165**
1976 on (1) **GUG1066HS**
composite head gaskets* (1) **GUG1066HSC**
3.9/4.2 litre (94mm bore)
3 rows of cylinder head bolts.
tin head gaskets (1) **RB7447**
composite head gaskets* (1) **RB7447C**
3.9/4.2/4.0/4.6 litre
(94mm bore) (1) **RA1233**
2 rows of cylinder head bolts.
Composite head gaskets.
5.2 litre (96mm bore) (1) **RB7684**
Composite head gaskets.*

Head gasket only- V8;
3.5 litre (88.9mm bore)
tin gasket (2) **GEG340**
composite gasket* (2) **GEG340C**
3.9/4.2 litre
3 rows of cylinder head bolts.
tin gasket (2) **RB7448**
composite gasket* (2) **RB7448C**
3.9/4.2/4.0 & 4.6 litre
2 rows of cylinder head bolts.
tin gasket (2) **ETC7819**
composite gasket* (2) **ERR7217**
5.2 litre (96mm bore) (2) **RB7685**
Composite gasket.*

**Composite head gaskets are thicker than standard tin gaskets and will therefore lower the engine's compression ratio. Ideal for correcting compression ratio when heads/ block faces have been skimmed. (Not applicable 1995 on).*

Approximate gasket thicknesses are as follows:
Standard (tin) gaskets 0.5mm
Composite gaskets 1.2mm

Typical effect on compression ratio:
Standard (tin) gaskets 3cc
Composite gaskets 10cc

V8 Cylinder Head Bolts

All parts listed are suitable for saloon, sports & 4x4 applications unless otherwise stated.

Bolt - cylinder head;
all engines up to 1995 *(except late 3.9, 4.0 & 4.6). (See note below).*
centre (long) *(7/16" UNC x 3.9")* (6) **602193A**
outer (medium) *(7/16" UNC x 2.7")* (14) **602192A**
Order 13 if your engine has a dipstick retainer clamp on the head bolt adjacent to the dipstick.
tapped bolt *(7/16" x 2.7")* (1) **602450A**
For dipstick retainer, if fitted.
double-ended bolt (1) **602200**
Fitted to some Range Rovers.
outer (short) *(7/16" x 2 1/4")* (8) **602191A**
1995 onwards *(late 3.9, 4.0 & 4.6).*
Note: These bolts can be identified by their flanged head. They do not need a separate washer and can be used on earlier engines. However, they are not re-useable and must be replaced once removed.
long (96mm) (6) **ERR2944**
medium (66mm) (14) **ERR2943**
Note: the outer row of short bolts, or "outrigger" bolts, has not been used since the introduction of the Series 2 Range Rover.

Washer - cylinder head bolts
standard (28) **602098A**
uprated (28) **602098UR**

Cylinder head stud kit (1) **RB7680**
Engine set of ARP cylinder head studs, washers and nuts to replace original bolts. Studs improve cylinder head sealing & prevent damage to block threads.

Description | Qty Req. | Part No.

V8 Valves, Guides & Springs

All parts listed are suitable for saloon, sport & 4x4 applications unless otherwise stated.

Various different valves have been used since the Rover V8's introduction; most having the standard "Rover SD1" head diameter: inlet - 40mm, exhaust - 34mm. However, early engines (pre 1976) were fitted with smaller diameter valves - 38mm inlet, 33mm exhaust - which are less efficient. In order to benefit from the larger valve sizes, it would be more practical to fit a pair of later cylinder heads than to attempt to fit the larger valves to early heads.
Vitesse specification valves are of standard SD1 head-diameter, with waisted stems just behind the valve head.
The largest valves that can be fitted to the existing valve seats (later heads only), without the need for extensive machining, are our Big Valves (Inlet - 41.4 mm, exhaust - 35.5 mm, with waisted stems). These valves are particularly suited to large capacity engines. (Note: some machining is required to the valve guide and seat).
Finally, the latest factory valves, as fitted to 3.9 & 4.2 engines since 1993, as well as the Series 2 Range Rover (4.0 & 4.6 engines), feature the same head diameter as SD1-type valves.
Note: all parts supplied are suitable for unleaded applications.

Inlet valve;
carburettor engines
early engines (pre 1976) (8) **602166**
Head diameter: 38mm.
1976 on (8) **614088**
Head diameter: 40mm.
efi engines - 3.5, 3.9 & 4.2 litre;
Head diameter: 40mm.
SD1 (8) **ERC9088**
Range Rover
up to eng nos: *35D06576A, 36D14149A, 37D00751A & 38D23045A* (8) **ERC9088**
from above eng nos. on (8) **ERR1780**
Series 2 Range Rover (8) **ERR1780**
'big valve' (8) **RB7460**
Head diameter: 41.4mm. With waisted stem.
Machining required to valve guide and seat.

Exhaust valve;
carburettor engines
early engines (pre 1976) (8) **602165**
Head diameter: 33mm.
1976 on (8) **614089**
Head diameter: 34mm.
efi engines
Head diameter: 34mm.
SD1 (8) **ERC9089**
Range Rover
3.5 litre (8) **614089**
3.9 & 4.2 litre (8) **ERR7338**
Series 2 Range Rover (8) **ERR7338**
'big valve' (8) **RB7461**
Head diameter: 35.5mm. With waisted stem.
Machining required to valve guide and seat.

Valve seat insert - inlet;
early engines
Pre-1976.
standard size (8) **602052**
oversize + 0.010" (8) **602223**
all other engines - 1976 on
Including Series 2 Range Rover.
standard size (8) **ERC224A**
oversize + 0.010" (8) **ERC225A**

Valve seat insert - exhaust;
early engines
Pre-1976.
standard size only (8) **614639**
all other 3.5 litre engines - 1976 on
standard (8) **ERC210A**
oversize + 0.010" (8) **ERC211A**
3.9, 4.2 litre & Series 2 Range Rover
standard (8) **ETC8596A**
oversize + 0.010" (8) **ERC211A**

Valve guide - standard;
For use with standard cam.
all engines up to 1994 (16) **603554**
Plain-topped; oil seals on inlet only.
late 3.9, 4.2, 4.0 & 4.6 ('94 on)(16) **ERR3648**
Stepped top, for use with neoprene seals (ERR1782) and matching valves.

Valve guide - performance;
Shortened & bulleted, for use with performance cam.
Suitable for all valves.
car set (inlet/exhaust) (1) **RB7453**
individual
inlet (8) **RB7463**
exhaust (8) **RB7464**

Description | Qty Req. | Part No.

V8 CYLINDER HEAD & FITTINGS

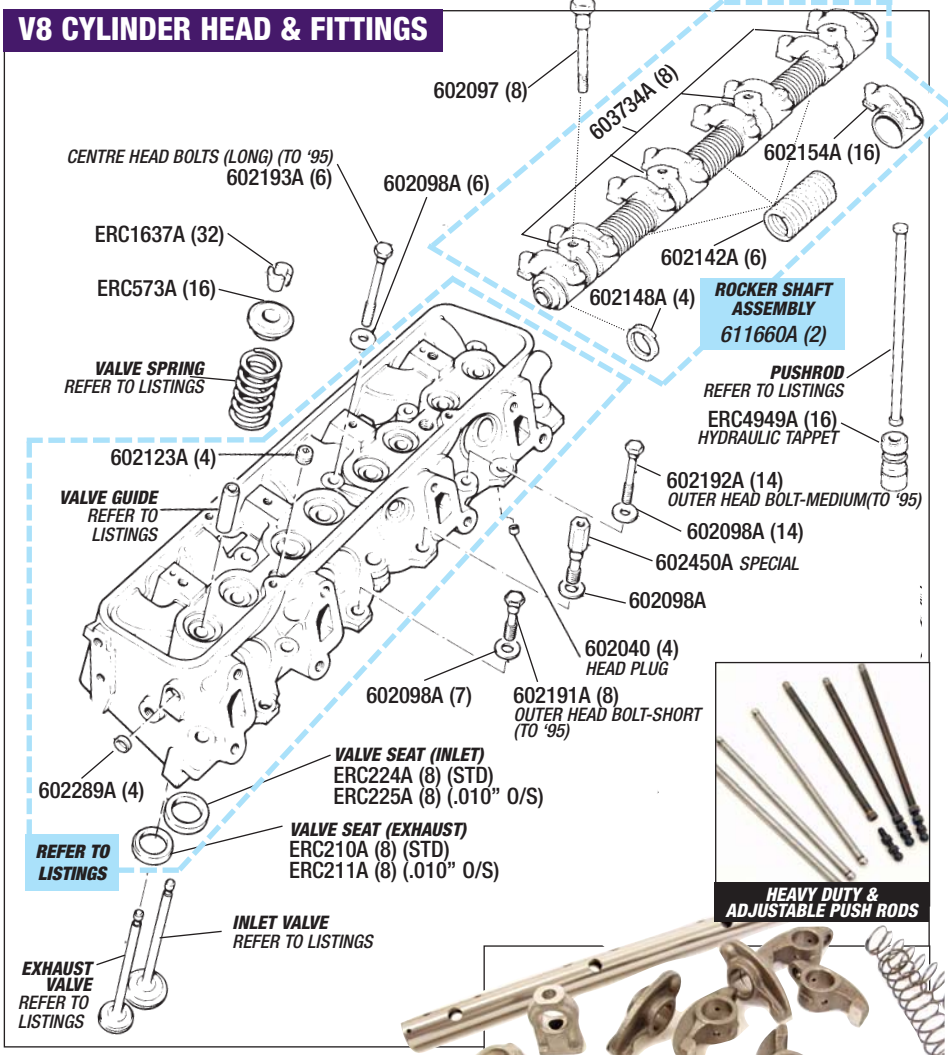

HEAVY DUTY & ADJUSTABLE PUSH RODS

V8 ROCKER GEAR OVERHAUL KIT - 611660K
Inc: rocker arms (8), rocker shaft, springs etc.
2 required per engine.

Valve stem oil seal;
all engines to 1994 (inlet only)(8) **ERC7865A**
"Tap washer" type, slips over valve stem.
1993 onwards (inlet & exhaust) (16) **ERR1782**
Neoprene type - not suitable for earlier engines (pre '94): requires stepped valve guide (ERR3648).

Valve spring - standard;
double - early engines (up to 1976)
inner (16) **602241A**
outer (16) **602240A**
single - 1976 on (16) **UKC8137**

Valve spring - uprated - engine set;
single (1) **RB7454**
Suitable for all engines with mild road camshaft. Uses standard retaining caps (ERC573).
double *(see Note below)* (1) **RB7455**
Suitable for all engines with fast road or road/rally camshaft.
Special retaining caps required (ERC573S).
Note: machining may be required to spring platform when fitting double valve springs to engines previously fitted with singles.

Retaining cap - valve springs;
early engines (16) **90602451A**
Fitted with double valve springs.
single valve springs (16) **ERC573A**
uprated double valve springs(16) **ERC573S**

Split cotter - all models (32) **ERC1637A**

WHAT IS LIFTER PRELOAD?

"Lifter preload" refers to the position of the pushrod seat in the lifter (cam follower) when the engine has been assembled and the lifter is positioned on the heel of the cam. Lifter preload must be checked whenever a non-standard component which alters the distance between the rocker arm and the lifter - such as a high lift camshaft or performance cylinder head - has been fitted. Incorrect lifter preload will cause poor running, premature wear or, at worst, engine failure.
Check the lifter preload as follows:
With the lifters empty of oil, assemble the rocker shaft & pushrod components, making sure there is no wear in the rocker shafts, rocker arms & pushrods.
Checking each lifter in turn, positioned on the heel of the cam, measure the gap between the pushrod seat and the bottom of the circlip groove. There must be a clearance of .020" minimum and .060" maximum at this position.
If the clearance is greater than .060", use pedestal shims (603734SH) to decrease. Remember to use equal thickness shims under each pedestal of a shaft to avoid distortion or breakage.

Description | Qty Req. | Part No.

V8 Rocker Gear

The following parts are suitable for all engines unless otherwise stated.

Rocker shaft assembly (2) **611660A**
Assembled, ready to fit.
Rocker build kit (2) **611660K**
Includes parts ready for assembly.
Rocker shaft only (2) **606661A**
Pedestal - rocker shaft (8) **603734A**
Pedestal shims (1) **603734SH**
Includes three sets of shims of different thickness. Use to set "lifter preload" when fitting a new cam with higher lift than standard. See also adjustable push rods, below.

Rocker arm;
original spec (alloy)
right hand (8) **602153**
left hand (8) **602154**
universal (16) **602154ALT**
Alternative steel arm - non handed.

Spacer spring - rocker shaft (6) **602142A**
End spring - rocker shaft (4) **602148A**
Wavy washer.
End washer - rocker shaft (4) **602186A**
Split pin - rocker shaft (4) **PC34**

Push rod;
standard (16) **603378**
heavy duty (16) **603378HD**
Larger diameter shaft. Cylinder head guide holes may need enlarging accordingly.
adjustable (engine set) (1) **603378ADJ**
Set of pushrods, adjustable for length at the rocker end, allowing the lifter preload to be precisely set without shims.

TO ORDER: 01522 568000
www.rimmerbros.co.uk

V8 ROCKER COVERS - CAM

POWDER COATED ROCKER COVERS

V8 Rocker Covers

For Breather Pipes refer to 'Fuel' section.

Rocker covers - single;		
SD1/TR8		
grey painted		
rh	(1)	**ERC262**
lh	(1)	**ERC263**
unpainted		
rh	(1)	**ERC2990**
lh	(1)	**ERC3932**
Range Rover		
early models - curved top		
rh	(1)	**RTC2350**
lh	(1)	**ETC8604**
1986 onwards		
curved top		
rh	(1)	**ETC8681**
lh	(1)	**ERR7356**
flat top		
rh	(1)	**ETC8680**
lh	(1)	**ETC8679**
1992 onwards		
rh	(1)	**ERR7363**
lh	(1)	**ERR7360**
Series 2 Range Rover		
rh	(1)	**ERR7367**
lh	(1)	**LDR000200**
Rocker covers - pairs;		
unpainted	(1)	**RB7431**
powder coated		
black	(1)	**RB7431PCB**
red	(1)	**RB7431PCR**
Gasket - rocker cover;		
standard	(2)	**GEG436**
uprated (rubber)	(2)	**GEG436UR**

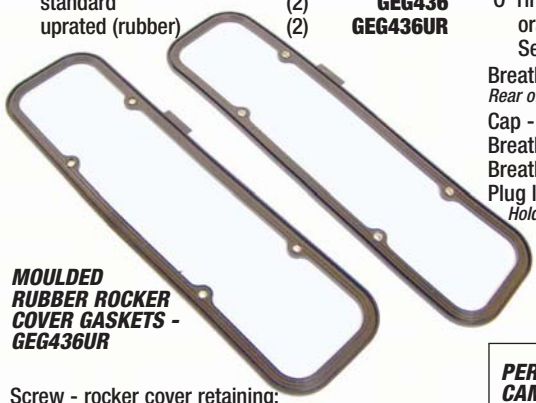

MOULDED RUBBER ROCKER COVER GASKETS - GEG436UR

Screw - rocker cover retaining;		
all models except Series 2 Range Rover.		
long	(4)	**603127**
short	(4)	**602530**
Series 2 Range Rover (8mm spline head)		
long	(4)	**ERR7371**
short	(4)	**ERR4818**
Spring washer - rocker screws	(8)	**GHF331**
Not Series 2 Range Rover.		
Flat washer - rocker screws	(8)	**GHF300**
Not Series 2 Range Rover.		
Rocker cover 'T'-Bolts - chrome	(2)	**RB7440**
American style rocker cover hold down bolts, supplied in sets of 4 (2 sets req'd).		
Breather/flame trap;		
Right hand rocker cover (flat top EFi), where fitted.		
original	(1)	**RB7432**
short type - ½ original size	(1)	**RB7432LOW**
powder coated		
black	(1)	**RB7432PCB**
red	(1)	**RB7432PCR**
chrome	(1)	**RB7432C**

For Breather Pipes refer to 'Fuel' section.

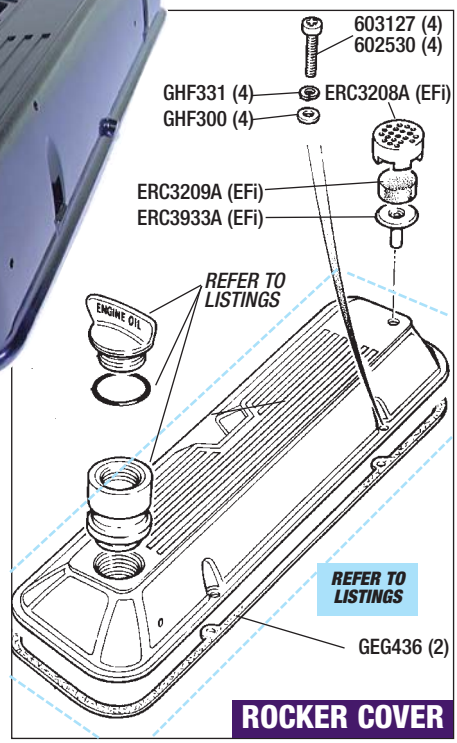

	Qty Req.	Part No.
Breather grommet (pair)	(1)	**RB7432ZG**
'O' ring/seal-flame trap	(1)	**564258**
Oil filler neck;		
threaded type (where fitted)	(1)	**ERC2989**
screw-on type	(1)	**ERC1208**
Retained by screws. Range Rover only.		
Series 2 Range Rover type	(1)	**ERR7335**
Gasket - filler neck;		
screw-on type	(1)	**612819**
Series 2 Range Rover type	(1)	**564258**
'O' Ring - Filler Neck (if fitted)	(1)	**ERC8705**
Oil filler cap;		
orange type	(1)	**625038A**
pressed steel type	(1)	**598231**
Series 2 Range Rover type	(1)	**ERR5218**
'O' ring/seal - filler cap;		
orange type	(1)	**564258**
Series 2 Range Rover	(1)	**ERR5219**
Breather filter foam- efi models	(1)	**ERC3209A**
Rear of LH rocker cover.		
Cap - breather filter (efi)	(1)	**ERC3208A**
Breather filter mounting (efi)	(1)	**ERC3933A**
Breather filter (carb)	(1)	**GFE7004**
Plug lead retainer (where fitted)	(2)	**603672**
Holds 4 leads.		

V8 Camshaft

*We stock a full range of **Standard** camshafts, which represent good value for money.*
*In addition, we offer a choice of **Performance** camshafts - available either as complete kits or on their own - which are designed to improve torque and horsepower when fitted to standard or uprated engines.*
*Our **Mild Road** camshaft gives a noticeable increase in low-rev torque, with smooth idle characteristics and good fuel economy. The Mild Road is a hydraulic camshaft, available on its own or as part of a kit, including followers, single valve springs and fitting instructions.*
***Fast Road** camshafts are available separately as a hydraulic type only, or in complete kits as hydraulic or solid camshafts. All Fast Road camshafts are suitable for engines right up to 5.2 litres. They are particularly effective when used as part of a complete Performance package with our Stage 1, 3 or 4 cylinder heads, uprated fuel systems and Sports Exhausts.*
***Fast Road Hydraulic** is a hydraulic camshaft which boosts top-end power whilst retaining low-end torque and good fuel economy.*
***Fast Road Solid** is a solid-lifter camshaft available only as a complete kit, which includes lifters, adjustable timing chain set, adjustable pushrods, all necessary gaskets and full instructions. The Fast Road Solid camshaft is designed for serious performance applications, where maximum top-end power is required, whilst still being suitable for the road.*
***Note:** Fast Road Solid Camshafts can only be fitted to engines which have valve cut-outs in the pistons (pocketed pistons) as fitted to our performance engines.*
All parts listed are suitable for Saloon/Sports and 4x4 applications unless otherwise stated.

Description	Qty Req.	Part No.
Camshaft only - standard;		
See also Camshaft Kits.		
saloon/sports applications	(1)	**ERC2003A**
Carb & efi.		
***Note:** some later Rover Vitesses, notably twin plenum models, were fitted with alternative camshafts, double valve springs, larger diameter rocker shafts and adjustable rocker gear. These parts are now generally unavailable but may be replaced using parts listed below.*		
Range Rover - 1970 to 1986		
low compression engines	(1)	**ERC2003A**
Compression ratios: 8.13, 8.25, 8.5:1.		
high compression engines	(1)	**ETC6849**
Compression ratio: 9.35:1.		
Range Rover - 1986 onwards		
carburettor engines		
- low compression *(8.13:1.)*	(1)	**ERC2003A**
- high compression *(9.35:1.)*	(1)	**ETC6849**
efi engines		
- 3.5 litre	(1)	**ETC6099**
- 3.9 litre	(1)	**ERR5924**
- 4.2 litre (kit)	(1)	**ERR4946**
Series 2 Range Rover		
4.0 litre	(1)	**ERR3720**
4.6 litre	(1)	**ERR5250**
Camshaft only - Performance;		
See also Camshaft Kits.		
Mild Road	(1)	**RB7444**
Straight swap for standard cam. No machining required. Use also anti pump-up followers ERC4949HD and single springs RB7454.		
Fast Road	(1)	**RB7445**
Machining required to valve guides and spring platforms. see Camshaft Kits if fitting without modified heads.		
Installation kit - camshaft	(1)	**RB7488**
Less cam. Includes: standard timing chain, timing cover gasket & oil seal, inlet manifold gasket & seals and 2 rocker cover gaskets. Suitability: all engines except Series 2 Range Rover.		

PERFORMANCE SOLID LIFTER CAMSHAFT KIT - RB7442S

CAMSHAFT KITS;

Standard
Suitable for all engines except Series 2 Range Rover.

kit 1	(1)	**RB7125**
Includes ERC2003A cam & 16 standard followers.		
kit 2	(1)	**RB7489**
Includes ERC2003A cam, 16 standard followers, timing chain, timing cover gasket & oil seal, 2 x rocker cover gaskets, inlet manifold gasket & 2 x inlet manifold seals.		

Performance
We offer two Performance cam kits:- a hydraulic cam kit and a solid lifter cam kit. Both kits are complete and a simple job for the competent DIY mechanic and both offer a worthwhile performance gain, either on their own or with our Performance cylinder heads.
Suitable for all engines except Series 2 Range Rover.

Fast Road Hydraulic	(1)	**RB7442HYD**
Kit includes special grind hydraulic cam, 16 performance followers, adjustable timing chain set, all necessary gaskets & full instructions.		
Fast Road Solid	(1)	**RB7442SOLID**
Kit includes special grind solid cam, 16 solid lifters, adjustable timing chain set, adjustable pushrods, all necessary gaskets and full instructions.		

***Note:** Fast Road Solid Camshafts can only be fitted to engines which have valve cut-outs in the pistons (pocketed pistons) as fitted to our performance engines.*

Description Qty Req. Part No. Description Qty Req. Part No. Qty Req. Part No.

V8 CAMSHAFT & TIMING CHAIN STANDARD

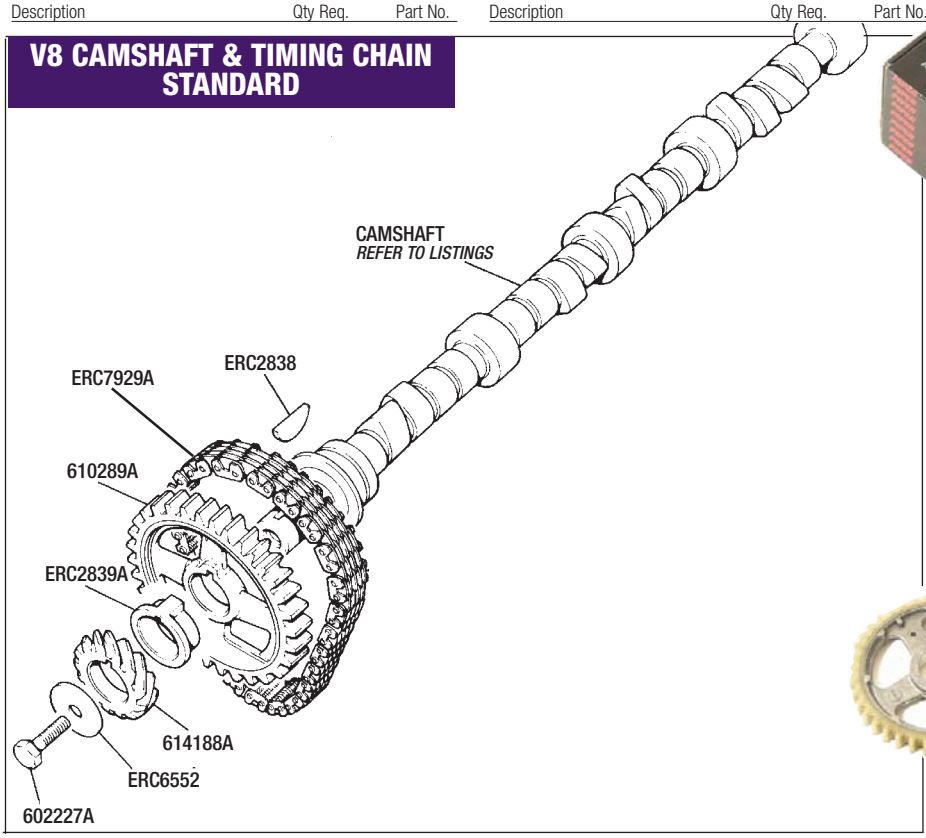

V8 Camshaft Components

Gasket - inlet manifold - all engines;
- tin (1) **ERC3990**
- composite (1) **ERR7306**

End seal - manifold gasket
- for tin gasket (2) **AJM645**
- for composite gasket (2) **ERR7283**

Clamp - end seal (2) **602076**

Screw - end seal clamp (2) **602236**

Cam follower - hydraulic;
- standard
  - each (16) **ERC4949**
  - set of 16 (1) **ERC4949K**
- heavy duty
  Designed to resist "pumping up", extending maximum revs.
  - each (16) **ERC4949HD**
  - set of 16 (1) **ERC4949HDK**

Cam lube (1) **RX1358**
Essential when installing a new cam & followers.

Timing disc (Protractor) (1) **RX1359**

Pedestal shims (1) **603734SH**
Includes three sets of shims of different thickness.
Use to set "lifter preload" (see Info panel) when fitting non-standard components eg cams with higher lift than standard.

Cam bearing set (engine block) (1) **RTC5918**

Woodruff key - camshaft;
- early engines (1) **90602025**
  Pre-1976.
- all other engines (1) **ERC2838**

Thrust bolt - camshaft (1) **602227UR**
Replaces the standard (imperial thread 7/16" UNF x 1 1/8") camshaft retaining bolt. Abutting the inside of the timing cover, this bolt prevents excessive camshaft endfloat.
Note: metric alternative (ERC 5749 - M12 x 30mm) for certain applications.

STANDARD CAMSHAFT KIT - RB7489

V8 Timing Chain

All parts listed are suitable for saloon, sports and 4x4 applications unless otherwise stated.

Timing chain - all engines;
- standard (1) **ERC7929A**
- adjustable - kit (1) **RB7449**
  Includes vernier camshaft sprocket, crank sprocket and double roller chain. Also includes timing protractor and Allen key. Fully adjustable cam sprocket allows extremely accurate cam timing whilst eliminating stretch common in original parts. Instructions included.

Replacement chain - double roller(1) **RB7450**

Camshaft sprocket - standard chain;
- all engines up to Series 2 Range Rover type
  - standard (nylon teeth) (1) **610289A**
  - vernier type (steel teeth) (1) **610289V**
- Series 2 Range Rover type only (1) **ERR5086**

Crankshaft sprocket - all engines(1) **90602372A**

Spacer - camshaft;
- mechanical fuel pump engines (1) **602149**
- all other engines (1) **ERC2839A**
  Not Series 2 Range Rover.

Distributor drive gear - camshaft;
- early engines (1) **602159**
  Pre-1976.
- all other engines (1) **614188A**
  Not Series 2 Range Rover.

Washer - camshaft (1) **ERC6552**
All engines except Series 2 Range Rover.

Bolt - camshaft;
All engines except Series 2 Range Rover.
- 7/16" UNF x 1 1/8"
  - standard (1) **602227A**
  - thrust - uprated (1) **602227UR**
    Prevents excess cam endfloat.
- M12 x 30mm (1) **ERC5749**
  Alternative - metric.

Flanged bolt - camshaft (M10 X 30)(1) **FS110301L**
Series 2 Range Rover.

Thrust plate - camshaft (1) **ERR2609**
Series 2 Range Rover.

Cam retaining collar (1) **ERR5926**
Series 2 Range Rover.

Screw - thrust plate (2) **SH505061**

Woodruff key - camshaft;
- early engines (1) **90602025A**
  Pre-1976.
- all other engines (1) **ERC2838**

TO ORDER: 01522 568000
www.rimmerbros.co.uk

V8 Timing Cover & Fittings

Timing Cover Identification (to 1994)

There are 2 main types of timing cover, fitted up to late 1994:

1. *saloon/sports, as fitted to Rover saloons and Triumph TR8s.*
2. *4x4, as fitted to Range Rovers and Land Rovers.*

The saloon/sports version has a more compact water pump, mounted lower down for improved bonnet clearance. The 4x4 version has a water pump mounted higher up. In addition, the 4x4 timing cover usually has a mud shield to protect the front crank oil seal.

Both types will fit all versions of the engine (providing suitable ancillaries are available) and both types are further categorised as follows:

The timing cover fitted to early vehicles (prior to 1976) incorporates an oil pump gear-housing designed for the early, "short" oil pump gears (refer to Oil Pump).

Later timing covers have a deeper gear-housing, accommodating the longer pump gears used from the SD1 (1976) until the introduction of the crank-driven oil pump (late 1994 - see below). Although the two types of timing cover are interchangeable, the oil pump gears and distributor would also need to be changed.

*If, however, uprating the early (pre 1976) oil pump is your intention, purchase Oil Pump Kit **RB7480**, which contains a spacer plate and longer gears, along with the correct distributor drive, designed specifically for the early timing cover. (RB7480 is not suitable for later timing covers, 1976 onwards).*

Timing Cover Identification (1994 on)

The timing cover fitted to the Series 2 Range Rover is of an updated design, unsuitable for earlier models due to the fact that there is no provision for a distributor.

There is, however, an "intermediate" timing cover, fitted to late 3.9 and 4.2 models immediately prior to the introduction of the Series 2 Range Rover, which includes a combination of features from both types, such as the crank-driven oil pump and conventional distributor. Although this timing cover will fit earlier models, it can be considered as unsuitable, as the oil pump drive requires a "long-nose" crank, not fitted to earlier engines.

Description	Qty Req.	Part No.
Timing cover;		
saloon/sports - 1976 on	(1)	**ERC418**
Deeper oil pump gear housing.		
Range Rover Classic		
short-gear oil pump engines	(1)	**613260**
Engine nos: 341,355,359 & 398, suffix A,B,C,D,E.		
long-gear oil pump engines	(1)	**ETC7385**
Engine nos: 341,355,398, suffix F and all other engines up to 1994.		
3.9 & 4.2 litre (1995 on)	(1)	**ERR3434**
Engine nos: 35D08928B, 36D25155B, 37D02090B, 38D27238B &40D09582B onwards.		
intermediate engines	(1)	**ERR6814**
Crank-driven oil pump & distributor (1994 on).		
Series 2 Range Rover	(1)	**ERR6438**
Gasket - timing cover;		
all engines up to 1994	(1)	**603775A**
Saloon/sports & 4x4.		
3.9 & 4.2 litre (1995 onwards)	(1)	**ERR7280**
Engine nos: 35D08928B, 36D25155B 37D02090B, 38D27238B & 40D09582B onwards.		
Series 2 Range Rover	(1)	**ERR7280**
Dowel - block locating	(2)	**90602202**

V8 TIMING COVER & FITTINGS *SALOON/SPORTS*

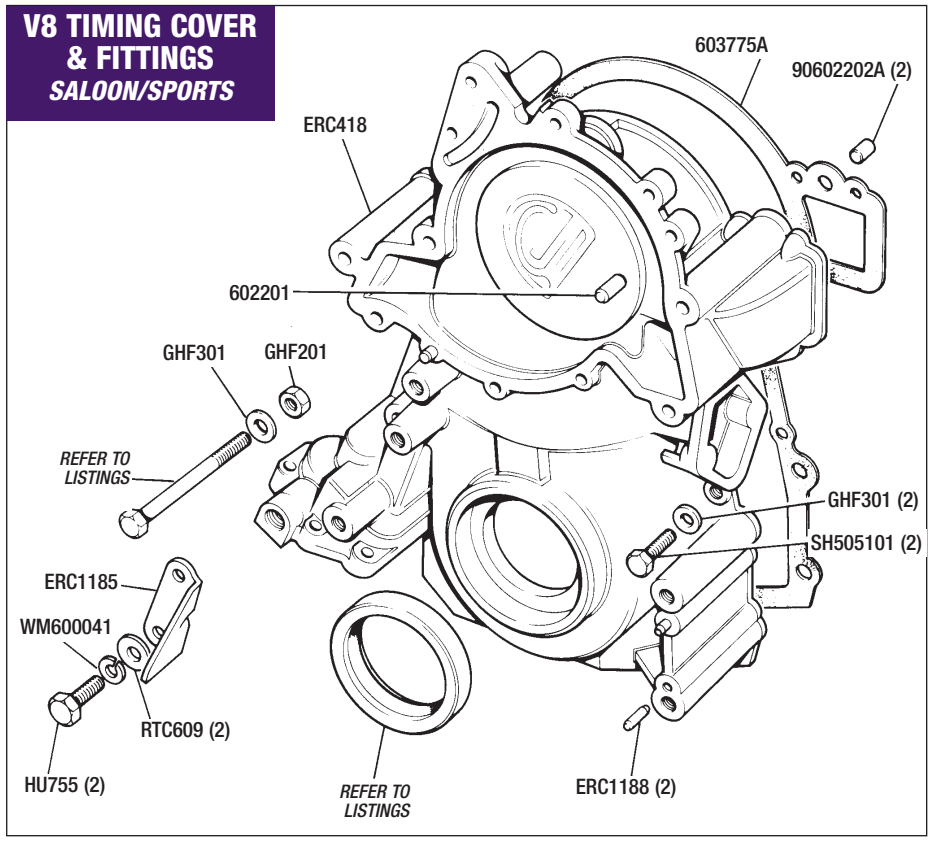

Description	Qty Req.	Part No.
Timing cover oil seal (front);		
saloon/sports	(1)	**ERC7987A**
4x4		
early type	(1)	**602178**
Press-fit seal with no retainer.		
all other engines	(1)	**ERR6490**
With screw-on mud shield.		
Mud shield - oil seal	(1)	**247766**
Where fitted - 4x4 only.		
Screw - mud shield	(8)	**78782**
4x4 engines.		
Timing pointer;		
saloon/sports	(1)	**ERC1185**
4x4 - all engines	(1)	**ETC7345**
Screw - timing pointer	(2)	**HU755**
Washer - timing pointer screw		
Spring washer	(2)	**WM600041**
Flat washer	(2)	**RTC609**
Bolt - timing cover to block;		
saloon/sports		
5/16" UNC x 3"	(1)	**BH505241**
5/16" UNC x 4 1/2"	(1)	**254035**
5/16" UNC x 1 1/4"	(3)	**SH505101**

Description	Qty Req.	Part No.
Bolt - timing cover to block;		
Range Rover Classic		
up to 1992		
5/16" UNC x 3"	(1)	**BH505241**
5/16"UNC x 4"	(1)	**602388**
5/16" UNC x 1 1/8"	(3)	**SH505091**
1992 onwards *(flanged)*	(5)	**FB505251S**
	(1)	**FB505311S**
	(3)	**FB505381S**
Series 2 Range Rover *(flanged)*	(5)	**FB505171S**
	(4)	**FB505241S**
Washer (flat) -		
timing cover retaining	(A/R)	**GHF301**
Nut - timing cover retaining	(1)	**GHF201**
All engines except Series 2 Range Rover.		
Stud	(2)	**ERC1188**
Dowel - water pump locating	(2)	**602201**
All engines except Series 2 Range Rover.		
Blanking plate - fuel pump	(1)	**610030**
Early engines fitted with electric fuel pump.		
Gasket - blanking plate	(1)	**602180**
Oil pressure switch	(1)	**STC4104**
Series 2 Range Rover only - fitted to timing cover.		

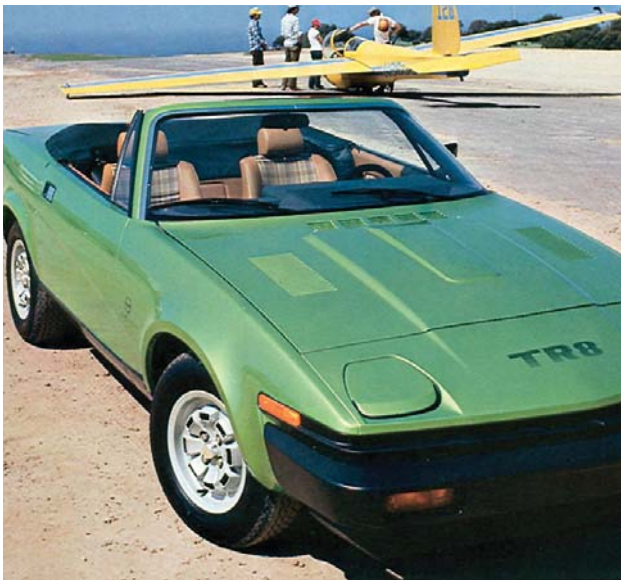

NOTES - TIMING COVERS & SERPENTINE DRIVE BELTS

*For **'Saloon/sports'** engines, the timing cover has a distributor-driven oil pump.*

*For **'4x4'** engines, the timing cover is the Land Rover type, with distributor-driven oil pump (as fitted to Range Rover up to 1994).*

For 3.9 litre engines and above, both types of timing cover can be exchanged for the "intermediate" type timing cover - which incorporates a crank-driven oil pump, provision for a distributor and serpentine ancillary drive belt. Note that ancillaries fitted to pre '95 vehicles may not be compatible with serpentine timing covers.

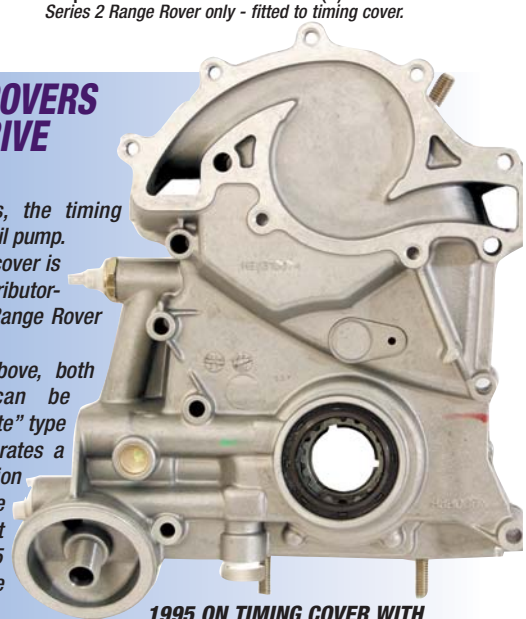

1995 ON TIMING COVER WITH CRANK-DRIVEN OIL PUMP

V8 ENGINE REBUILD KIT

3.5 OR 3.9 LITRE

ALSO CONVERT YOUR ENGINE FROM 3.5 LITRE TO 3.9 LITRE USING OUR PISTONS AND LINERS!

FOR THE DIY ENTHUSIAST!

These kits include everything you are likely to need for a 3.5 litre engine rebuild or conversion to 3.9 litres. We assume you'll have the block rebored (in the case of the 3.9, re-sleeved using the liners supplied) and any other machining work done as required.

Please note that your crankshaft is required in exchange. For export customers, the crank can be removed from the kit, a price adjustment made, allowing you to have the re-grinding done locally.

We can also offer kits using performance components. Please enquire.

REBUILD KIT	3.5 LITRE	3.9 LITRE
PART NUMBER	RB2028/3.5	RB2028/3.9

Kit Contents:-

- Crankshaft - reground *(exchange)*
- Bearing shells to suit
- Piston set including rings and pins:
  - 3.5 litre (+ 0.020") (9.75:1)
  - 3.9 litre (standard) (9.35:1)
- Piston liner set *(3.9 litre only)*
- Oil Filter
- Sump gasket set inc oil seals
- Timing chain, crank sprocket, cam sprocket
- Camshaft and 16 followers
- Valves - Engine set (16)
- Valve guides (16)
- Valve stem oil seal (inlet) (8)
- Valve springs (16)
- Rocker shaft (2)
- Rocker arms (16)
- Head gasket set
- Core plug engine set

TO ORDER: 01522 568000
www.rimmerbros.co.uk

V8 ENGINE COMPONENTS

V8 Cylinder Block Components

All parts listed are suitable for saloon, sports and 4x4 applications unless otherwise stated.

Description	Qty Req.	Part No.
Cylinder block - bare; *Suitable for all applications. Bare cylinder blocks are supplied with main bearing caps, cam bearings, core plugs and cylinder liners but less crankshaft, pistons etc.*		
3.5 litre	(1)	**ERC6934**
3.9 & 4.2 litre	(1)	**ERR7350**
4.0 & 4.6 litre *Series 2 Range Rover type.*	(1)	**ERR7349**
Cylinder liner set - 3.9 litre *Set of 8 liners for converting 3.5 engines to 3.9 litre bore. Also suitable for replacing the liners in an existing 3.9 litre (or larger capacity) engine.*	(1)	**RB7486**
Liner & piston set - 3.9 litre *As above, but kit includes standard size 9.35:1 compression pistons and rings for 3.9 conversions.*	(1)	**RB2029**
Head gasket set - V8;		
3.5 litre (88.9mm bore)		
tin head gaskets		
to 1976 (pre SD1)	(1)	**GEG165**
1976 on	(1)	**GUG1066HS**
composite head gaskets*	(1)	**GUG1066HSC**
3.9/4.2 litre (94mm bore) *3 rows of cylinder head bolts.*		
tin head gaskets	(1)	**RB7447**
composite head gaskets*	(1)	**RB7447C**
3.9/4.2/4.0/4.6 litre (94mm bore) *2 rows of cylinder head bolts. Composite head gaskets.*	(1)	**RA1233**
5.2 litre (96mm bore) *Composite head gaskets*.*	(1)	**RB7684**
Head gasket only- V8;		
3.5 litre (88.9mm bore)		
tin gasket	(2)	**GEG340**
composite gasket*	(2)	**GEG340C**
3.9/4.2 litre *3 rows of cylinder head bolts.*		
tin gasket	(2)	**RB7448**
composite gasket*	(2)	**RB7448C**
3.9/4.2/4.0 & 4.6 litre *2 rows of cylinder head bolts.*		
tin gasket	(2)	**ETC7819**
composite gasket*	(2)	**ERR7217**
5.2 litre (96mm bore) *Composite gasket*.*	(2)	**RB7685**

**Composite head gaskets are thicker than standard tin gaskets and will therefore lower the engine's compression ratio. Ideal for correcting compression ratio when heads/block faces have been skimmed. (Not applicable 1995 on).*
Approximate gasket thicknesses are as follows:
Standard (tin) gaskets 0.5mm
Composite gaskets 1.2mm
Typical effect on compression ratio:
Standard (tin) gaskets 3cc
Composite gaskets 10cc

Description	Qty Req.	Part No.
Sump gasket set (inc. seals);		
all engines up to 1991	(1)	**GUG1538CS**
all engines 1992 onwards	(1)	**STC1639**
Sump gasket only *(All engines)*	(1)	**AJM539**
Seal - rear main bearing cap *Cruciform seal.*	(2)	**611089A**
Crankshaft oil seal - rear;		
early (rope type) *Very early engines only.*	(1)	**613855**
all other engines	(1)	**ERR2640**
Timing cover oil seal - front;		
saloon/sports	(1)	**ERC7987A**
4x4		
early type *Press-fit seal with no retainer.*	(1)	**602178**
all other models *With Screw-on retainer.*	(1)	**ERR6490**
Core plug set - all engines	(1)	**RB7105**
Cam bearing set;		
all engines except 4.0 & 4.6	(1)	**RTC5918**
4.0 & 4.6 models *Series 2 Range Rover type engines.*	(1)	**STC1961**

V8 CYLINDER BLOCK

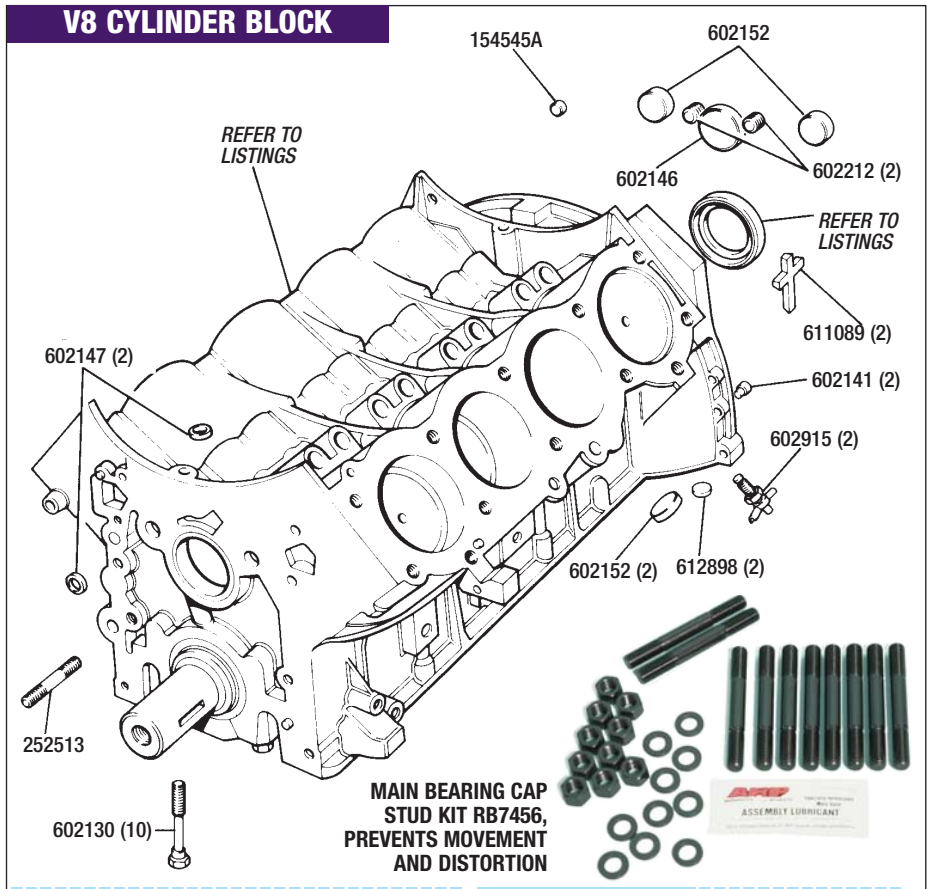

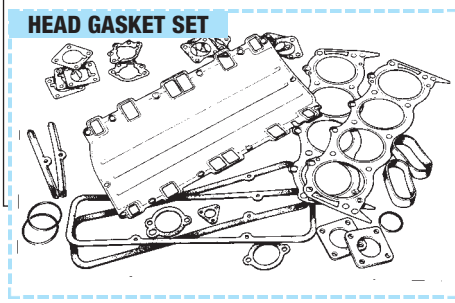

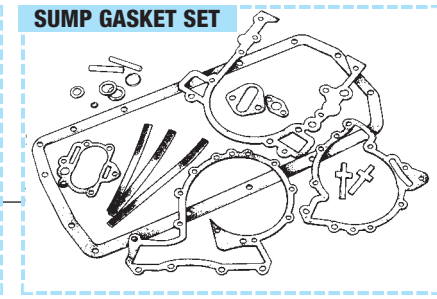

Description	Qty Req.	Part No.
Dowel - bellhousing flange	(2)	**602141**
Drain tap - block	(2)	**602915**
Drain plug *Alternative to tap.*	(2)	**129077**
Core plug *Lower bellhousing flange.*	(2)	**612898**
Bolt - main bearing cap *All engines.*	(10)	**602130**
Stud kit - main bearing cap *(Engine set) Used instead of standard main bearing bolts, studs provide superior clamping for main bearing caps, preventing them from working loose.*	(1)	**RB7456**
Cross-bolt - main bearing cap *4.0 & 4.6 cross-bolted engines.*	(9)	**FB110137**
Hex-screw - main bearing cap *4.0 & 4.6 cross-bolted engines.*	(1)	**SS110555**
Oil seal - for FB110137	(9)	**ERR3330**
Oil seal - for SS110555	(1)	**ERR3331**
Stud - front of block *Not 4.0 & 4.6 litre engines.*	(1)	**252513**
Plug - front of block	(4)	**602147**
Breather pipe - crankcase *Early engines.*	(1)	**603143**
Core plug - rear of block *Later models - replaces breather.*	(1)	**154545**
Core plug - side & rear of block	(8)	**602152**
Core plug - camshaft rear	(1)	**602146**
Threaded plug;		
all engines except 4.0 & 4.6	(2)	**602212**
4.0 & 4.6 engines	(2)	**ERR4314**
Crank sensor housing *4.0 & 4.6 engines.*	(1)	**ERR3693**

V8 Sump Pan & Oil Pick-up Pipe

Standard *sumps are available in Saloon/Sports and 4x4 types.*
Performance *sumps are available for Saloon/Sports applications. Based on the Rover SD1-type sump, these are specially designed, enlarged sumps, with extra baffles to prevent oil starvation during high-speed cornering.*

Description	Qty Req.	Part No.
Sump pan - standard;		
Saloon/Sports		
SD1/TR8-type sump.		
without oil level sensor	(1)	**ERC2776**
with oil level sensor	(1)	**ERC8544**
4x4		
Land Rover/Range Rover sump.		
except Series2 Range Rover	(1)	**ERR4633**
Series 2 Range Rover	(1)	**ERR5220**
Sump pan - Performance;		
Performance sumps are exchange.		
Saloon/Sports applications	(1)	**ERC2776PERF**
Oil level sensor - saloon sump	(1)	**DRC8005**

SUMP GASKET SET **GUG1538CS**

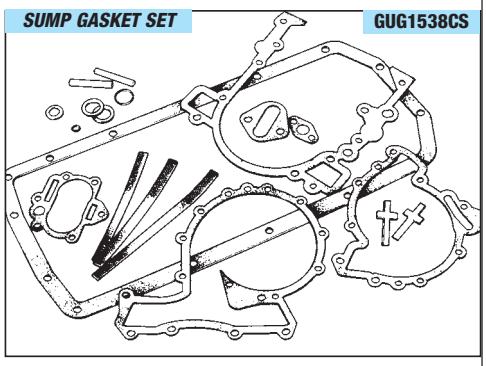

Description	Qty Req.	Part No.
Sump gasket set (inc. seals);		
all engines up to 1991	(1)	**GUG1538CS**
all engines 1992 onwards	(1)	**STC1639**
Sump gasket only	(1)	**AJM539**
All engines.		
Sump bolt/washer;		
saloon/sports		
medium	(14)	**SH505051**
long	(2)	**603944**
4x4	(16)	**SH505051**
Reinforcing strip - rear of sump	(1)	**603943**
Saloon/sports only.		
Drain plug - sump;		
all *(except Series 2 Range Rover)*	(1)	**603659**
Series 2 Range Rover	(1)	**UAM2957**
Washer - sump drain plug;		
all *(except Series 2 Range Rover)*	(1)	**213961**
Series 2 Range Rover	(1)	**UAM2857**
Oil pick-up strainer;		
saloon/sports	(1)	**ERC1585**
4x4		
all *(except Series 2 Range Rover)*	(1)	**ERR3677**
Series 2 Range Rover	(1)	**ERR4795**
Oil screen - pick-up pipe	(1)	**602070A**
All engines.		
Gasket - pick-up strainer	(1)	**90602068**
All engines except Series 2 Range Rover.		
O-ring - pick-up strainer	(1)	**ERR4795**
Series 2 Range Rover engines.		
Spacer - pick-up strainer	(1)	**ERR4793**
Series 2 Range Rover engines.		
Setscrew - strainer to block;		
all *(except Series 2 Range Rover)*	(2)	**253407**
Series 2 Range Rover engines	(2)	**FS106167**
Spring washer - setscrew	(2)	**GHF331**
All engines except Series 2 Range Rover.		
Nut - strainer	(2)	**NH605041**
Series 2 Range Rover engines.		
Baffle plate - removable	(1)	**ERC1506**
Saloon/sports sump only.		
Screw - baffle plate	(6)	**253206**
Spring washer - baffle plate	(6)	**GHF331**
Flat washer - baffle plate	(6)	**RTC609**

V8 SUMP & OIL PICK-UP
SALOON/SPORTS

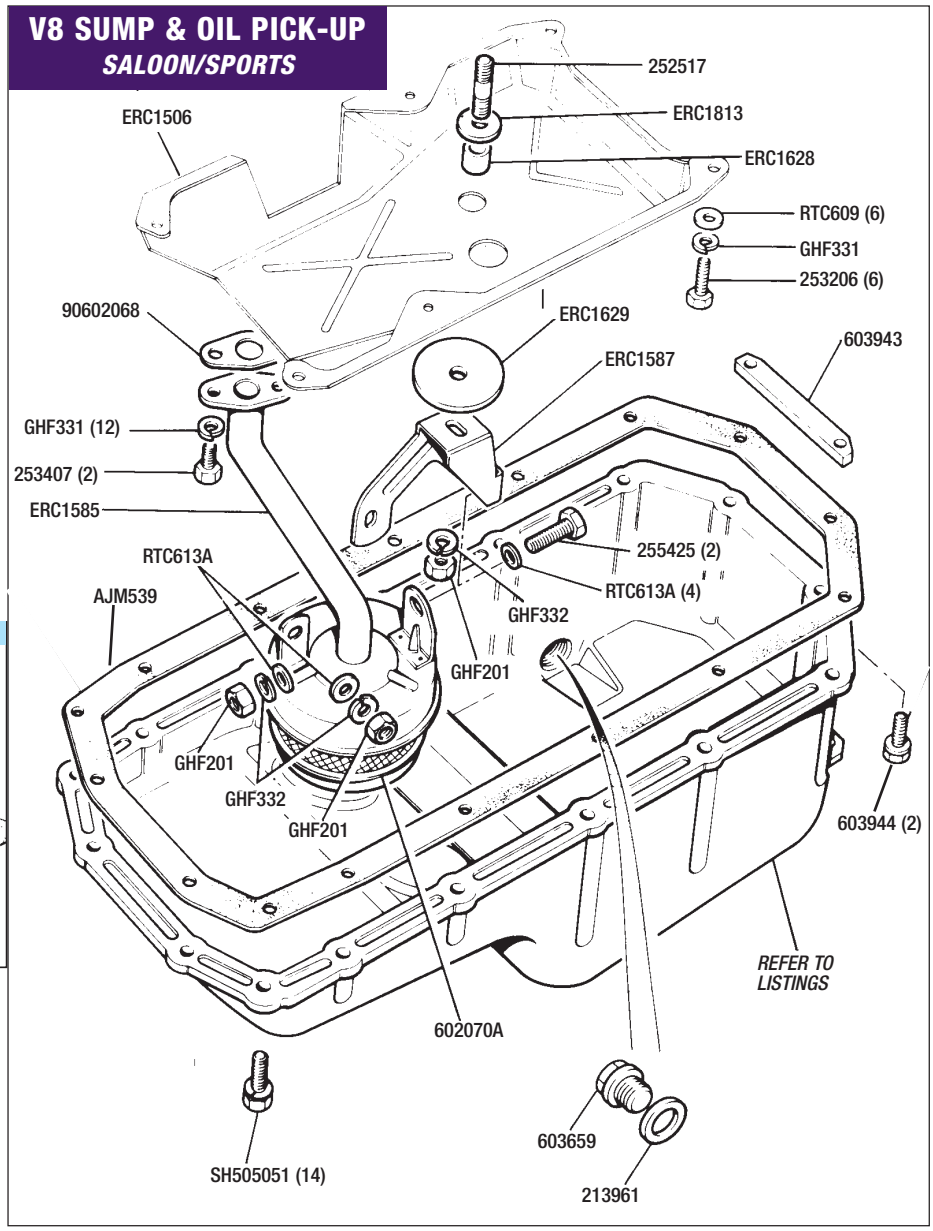

Description	Qty Req.	Part No.
Steady bracket - pick-up pipe	(1)	**ERC1587**
Saloon/sports only.		
Large washer - steady bracket	(1)	**ERC1629**
Saloon/sports only.		
Stud - steady bracket	(1)	**252517**
Small washer - steady bracket stud	(1)	**ERC1813**
Spacer - steady bracket stud	(1)	**ERC1628**
Spring washer - steady bracket	(1)	**GHF332**
Nut - steady bracket	(1)	**GHF201**

Description	Qty Req.	Part No.
Setscrew*	(2)	**255425**
Flat washer*	(2)	**RTC613A**
Spring washer*	(2)	**GHF332**
Nut*	(2)	**GHF201**
**Pick-up pipe to steady bracket.*		

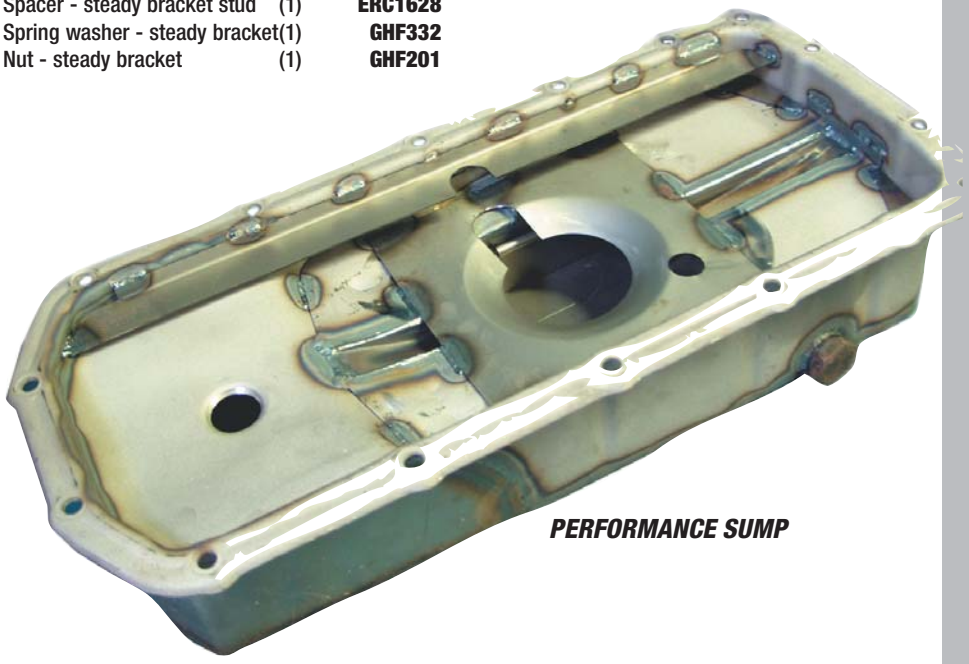

PERFORMANCE SUMP

TO ORDER: 01522 568000
www.rimmerbros.co.uk

V8 DIPSTICK

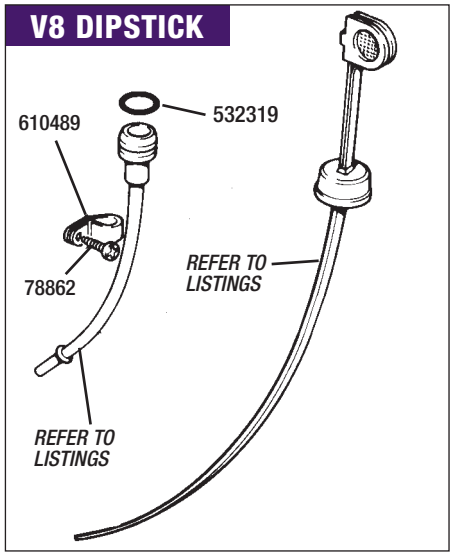

V8 Dipstick

The length of the dipstick tube varies considerably depending on application: SD1 saloons have a long dipstick tube and Range Rovers a much shorter one. To get an accurate oil level reading, therefore, the dipstick & tube must match the engine.

Description	Qty Req.	Part No.
Dipstick;		
SD1 saloon	(1)	**ERR1922**
TR8 (original)	(1)	**614293**
Range Rover		
all models 1970 - 1985	(1)	**603173**
1986 *(up to Series 2 Range Rover)*	(1)	**ERR1922**
Series 2 Range Rover	(1)	**ERR4905**
Dipstick tube;		
SD1 saloon	(1)	**ERC6437A**
TR8 (original)	(1)	**ERC2690**
Range Rover		
all models 1970 - 1985	(1)	**ERC2571**
1986 *(up to Series 2 Range Rover)*	(1)	**ERR4556**
Series 2 Range Rover	(1)	**ERR4550**
O-ring - dipstick tube		
saloon/sports	(1)	**532319**
Range Rover	(1)	**602545**
Except Series 2 Range Rover.		
Retaining clip - dipstick tube	(1)	**610489**
Screws to rocker cover. Suitable for all engines.		
Clamp - dipstick tube	(1)	**602449**
Screws to adjacent cylinder head bolt. Suitable for all engines where fitted.		

V8 Crankshaft

All parts listed are suitable for Saloon/sports and 4x4 applications unless otherwise stated.
Note: Around mid 1994, Land Rover introduced a crankshaft-driven oil pump - built into the timing cover - for certain 3.9 litre and larger engines.These engines required a crankshaft with a longer 'nose' than previous engines. For this reason, crankshafts are available with two different nose lengths, as follows:
*All 3.5 litre engines, plus factory 3.9 & 4.2 litre engines up to around mid-1994 (exact engine numbers listed below), are fitted with **short-nose** (70.6mm) cranks. These engines have camshaft-driven oil pumps and separate drivebelts for ancillary components.*
*3.9 & 4.2 litre engines from around mid-1994 (engine numbers listed below) onwards are fitted with **long-nose** (90.3mm) cranks. These engines have crank-driven oil pumps and a single, 'serpentine' drivebelt for the ancillary components.*

Please check your engine number before ordering. The exchange unit must be a similar type, otherwise a surcharge will apply.

Description	Qty Req.	Part No.
Crankshaft;		
Reconditioned units are exchange.		
3.5 litre (short nose)		
new, less bearings	(1)	**612989**
reground, inc. bearings	(1)	**612989R**
3.9 litre		
short nose		
Factory 3.9 engines up to engine nos: 35D08966, 36D25523, 37D01931 & 38D27330.		
new, less bearings	(1)	**612989**
reground, inc. bearings	(1)	**612989R**
long nose		
Factory engines, above engine nos onwards.		
new, less bearings	(1)	**ERR4060**
reground, inc. bearings	(1)	**ERR4060R**
4.2 litre		
New, less bearings.		
up to eng.no.40D09581	(1)	**ERR3037**
Short nose.		
eng.no.40D09582 on	(1)	**ERR4152**
Long nose.		
4.3 & 4.8 litre stroker kits;		
See 'Stroker Kits' panel.		
Includes new 86mm stroke crankshaft, con rods, pistons/rings & bearings.Not suitable for 4.0 or 4.6 litre blocks.		
4.3 litre kit	(1)	**RB7678**
4.8 litre kit	(1)	**RB7677**
Series 2 Range Rover engines		
New, less bearings.		
4.0 litre	(1)	**ERR5090**
4.6 litre	(1)	**ERR5091**

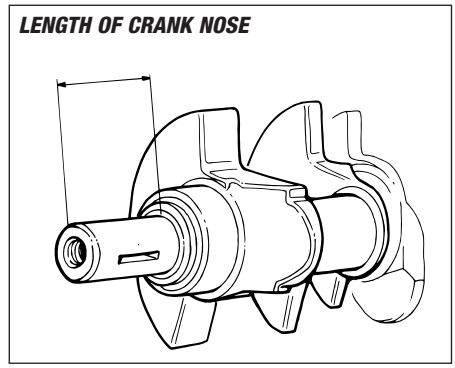

Description	Qty Req.	Part No.
Main bearing set - Standard;		
all engines except Series 2 Range Rover.		
standard size	(1)	**RTC1718**
oversize + 0.010"	(1)	**RTC1718.010**
oversize + 0.020"	(1)	**RTC1718.020**
oversize + 0.030"	(1)	**RTC1718.030**
oversize + 0.040"	(1)	**RTC1718.040**
oversize + 0.060"	(1)	**RTC1718.060**
Series 2 Range Rover engines	(1)	**STC1425**
4.0 & 4.6 Litre.		
*Note: The latest bearing sets feature thrust plates **only** on the upper half of centre bearing.*		
Main bearing set - heavy duty;		
all engines except Series 2 Range Rover.		
standard size	(1)	**RB7452**
oversize + 0.010	(1)	**RB7452.010**
oversize + 0.020	(1)	**RB7452.020**
Bolt - main bearing cap	(10)	**602130A**
All models.		
Stud kit - main bearing cap	(1)	**RB7456**
(Engine set) Used instead of standard main bearing bolts, these ARP studs provide superior clamping for main bearing caps, preventing them from working loose. Recommended for Performance Engines.		
Cross-bolt - main bearing cap	(9)	**FB110137**
3.9, 4.0 & 4.6 litre cross-bolted engines.		
Hex-screw - main bearing cap	(1)	**SS110555**
3.9, 4.0 & 4.6 litre cross-bolted engines.		
Oil seal;		
for FB110137	(9)	**ERR3330**
for SS110555	(1)	**ERR3331**
Crankshaft oil seal (rear);		
rope type (very early engines)	(1)	**613855**
lip type	(1)	**ERR2640**
Cruciform seal	(2)	**611089A**
Rear main bearing cap.		
Timing cover oil seal (front);		
saloon/sports	(1)	**ERC7987A**
4x4		
early type	(1)	**602178**
Press-fit seal with no retainer.		
all other engines	(1)	**ERR6490**
With screw-on retainer.		
Spigot bush - crankshaft;		
saloon/sports		
manual transmission	(1)	**614263**
automatic transmission	(1)	**610196**
4x4 - manual & auto	(1)	**549911**
Woodruff key;		
all 3.5, 3.9 & 4.2 up to 1992	(1)	**90602025A**
3.9 & 4.2 1992 onwards	(1)	**ERR2846**
Also 4.0 & 4.6 Series 2 Range Rover type.		
Crankshaft sprocket - all models	(1)	**90602372**
Bolt - crankshaft pulley;		
starting dog type	(1)	**610178**
Fitted to some 4x4 engines.		
standard bolt	(1)	**ERC417A**
Washer - crankshaft pulley;		
starting dog type	(1)	**602411**
standard bolt type	(1)	**ERC416A**

V8 CRANKSHAFT

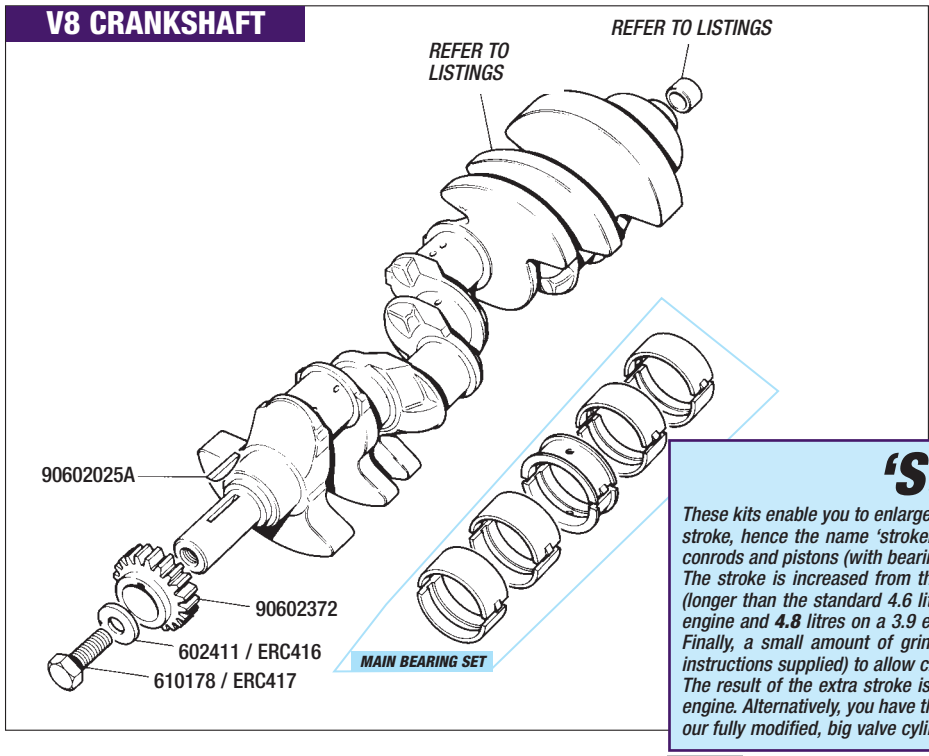

'Stroker' Kits

These kits enable you to enlarge the cubic capacity of your existing engine by increasing the stroke, hence the name 'stroker'. The kits comprise a brand new, high quality crankshaft, conrods and pistons (with bearings and piston rings supplied).
*The stroke is increased from the standard 3.5/3.9 engine's 71.1mm to a massive **86mm**, (longer than the standard 4.6 litre stroke of 82mm) giving a capacity of **4.3** litres on a 3.5 engine and **4.8** litres on a 3.9 engine. Both engines require a 20 thou rebore before fitting. Finally, a small amount of grinding is required to the bottom of two cylinder liners (full instructions supplied) to allow clearance for crank rotation.*
The result of the extra stroke is a huge increase in torque, even on an otherwise standard engine. Alternatively, you have the basis of a high performance engine, to which you can add our fully modified, big valve cylinder heads, uprated camshaft and sports exhaust system.

Description Qty Req. Part No. Description Qty Req. Part No. Description Qty Req. Part No.

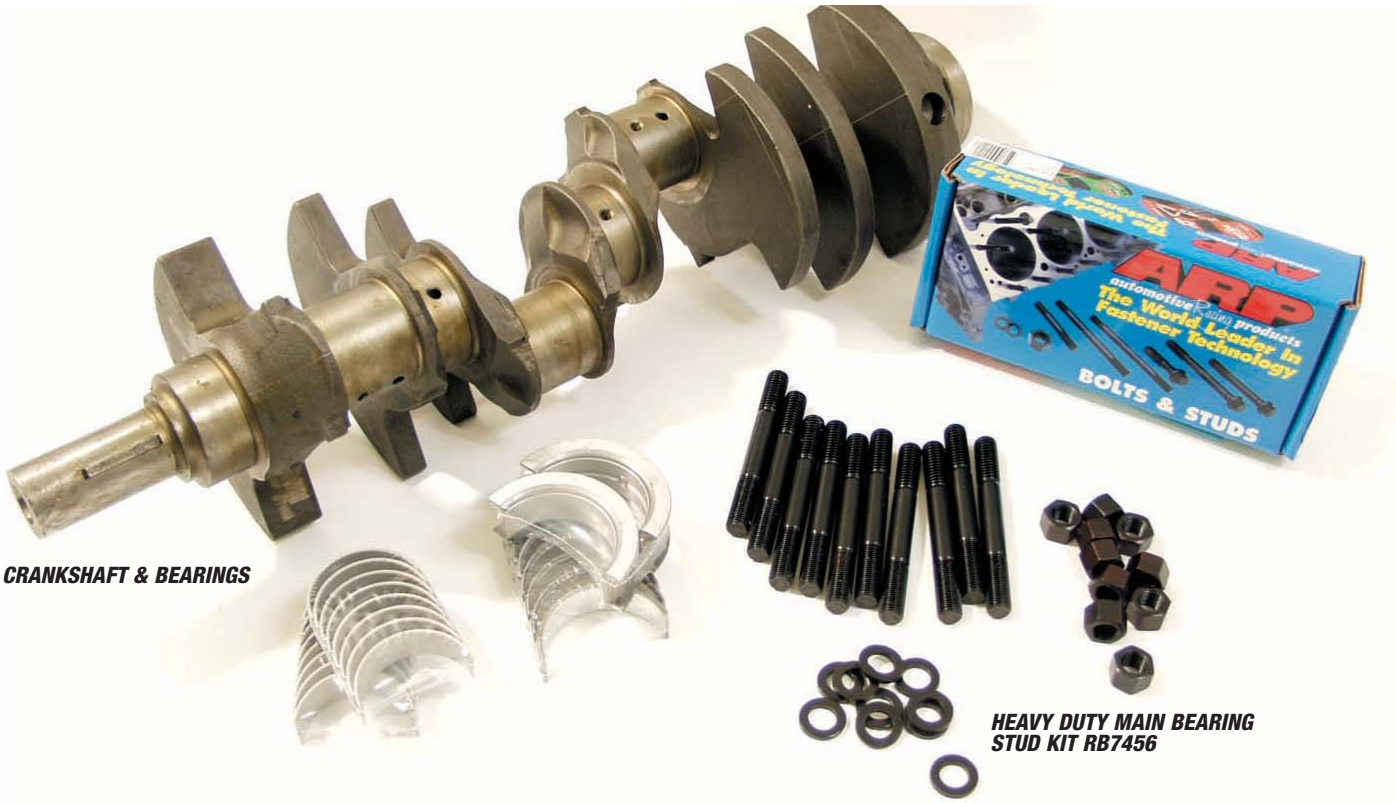

CRANKSHAFT & BEARINGS

HEAVY DUTY MAIN BEARING STUD KIT RB7456

V8 Crankshaft Pulley

CRANKSHAFT PULLEY - SD1 & TR8

Pulley assembly - crankshaft - SD1/TR8 engines;

non air conditioning	(1)	**ERC420**
pulley - water pump*	(1)	**ERC386**
bolt - water pump pulley*	(3)	**ERC45**
reinforcing plate*	(1)	**602587**
pulley - power steering*	(1)	**ERC1168**
nut - power steering pulley*	(3)	**NH605041**

**Comprising pulley assembly ERC420.*

with air conditioning	(1)	**ERC6521**
pulley - water pump*	(1)	**ERC387**
bolt - water pump pulley*	(3)	**BH605141**
washer - pulley bolt*	(3)	**RTC613**
pulley - air compressor*	(1)	**ERC389**
reinforcing plate*	(1)	**602587**
pulley - power steering*	(1)	**ERC1168**
nut - power steering pulley*	(3)	**NH605041**

**Comprising pulley assembly ERC6521.*

CRANKSHAFT PULLEY COMPONENTS - RANGE ROVER

Pulley - water pump/alternator belt;

non air con

non p.a.s. models to 1985	(1)	**611019**
p.a.s. models to 1985	(1)	**ETC4330 &**
Order 1 of each		**ETC4369**

air con models;

p.a.s. & non p.a.s. to 1985	(1)	**ETC4330 &**
Order 1 of each		**ETC4354**
1986 on, carb & efi *Up to 1992 (VIN JA)*	(1)	**ETC5679**
1993 models up to following engine nos: 35D08967B, 36D25524B, 37D01932B 38D27331B & 40D09582B	(1)	**ERR2799**
above engine nos. onwards *Up to Series 2 Range Rover.*	(1)	**ERR4866**
Series 2 Range Rover (4.0&4.6)	(1)	**LHG100670**

Vibration damper - 3.5 & 3.9;		
all models up to 1992	(1)	**ERC5462**
1992 models up to following engine nos: 35D08967B, 36D25524B, 37D01932B & 38D27331B (3.9 litre)	(1)	**ETC7339**
above engine nos. onwards	(1)	**ERR3442**
Vibration damper - 4.2 *Engine no. 40D09582B onwards.*	(1)	**ERR4594**
Pulley - power steering belt *All p.a.s. models except Series 2 Range Rover.*	(1)	**ETC4330**
Balancing rim;		
all models to 1991 (3.5)	(1)	**603301**
models from 1992 on (3.9)	(1)	**ETC7996**
Mud deflector	(1)	**613671**
Reinforcing plate *All models except 4.0 & 4.6.*	(1)	**602587**
Bolt - crankshaft pulley assembly;		
non p.a.s. models	(6)	**GHF104**
p.a.s. & air con models	(6)	**BH605141**
Nut - all models	(6)	**NH605041**

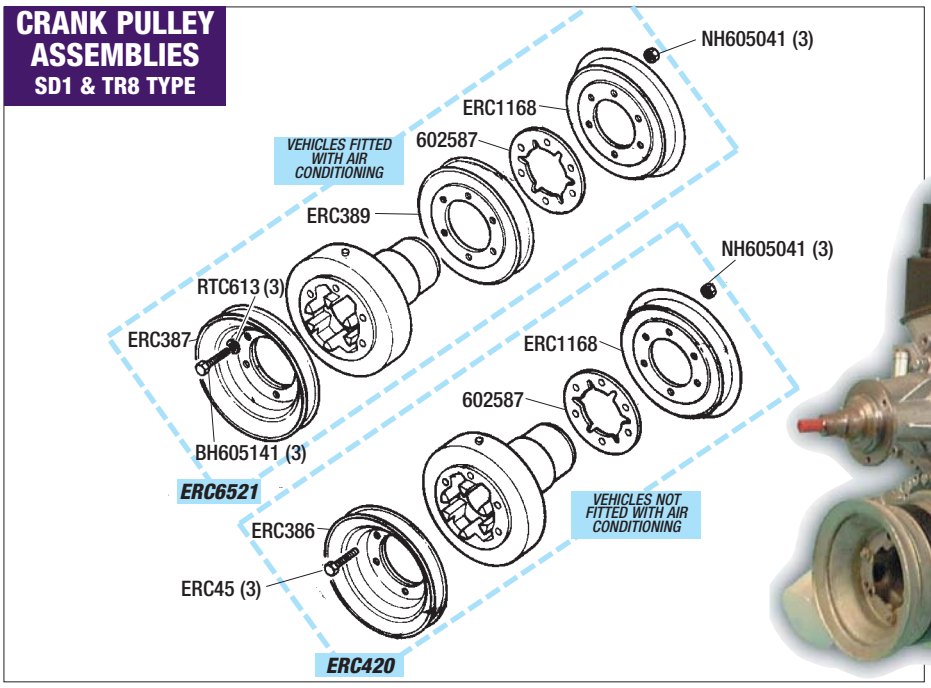

DISPLAY ENGINE FITTED WITH 4-BARREL CARB, TUBULAR MANIFOLDS AND OTHER ANCILLARIES.

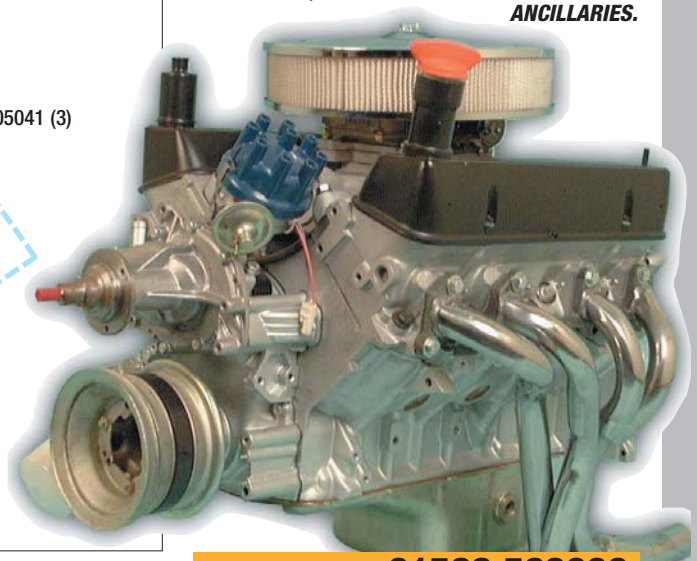

TO ORDER: 01522 568000
www.rimmerbros.co.uk

V8 Drive Belts

Description	Qty Req.	Part No.
Water pump/alternator drive belt - saloon/sports;		
TR8	(1)	**GFB215**
SD1		
carb		
non air-con	(1)	**GFB215**
with air-con	(1)	**GCB51118**
efi	(1)	**GCB51118**
34A engines	(1)	**GCB10838**
Water pump drive belt - Range Rover;		
1970 to 1985 (VIN BA)		
non air con	(1)	**613602**
with air con	(1)	**614670**
1986 onwards (carb & efi)		
up to 1994 (v-belt)	(1)	**611612**
1994 onwards (serpentine belt)		
non air con	(1)	**ERR4461**
with air con	(1)	**ERR4623**
Alternator drive belt - Range Rover;		
carb		
non air con	(1)	**613602**
with air con	(1)	**614794**
efi		
1986 to 1992 (VIN JA)	(1)	**ERR2073**
1993 (VIN KA) onwards	(1)	**ERR2678**
Steering pump drive belt - saloon/sports;		
TR8	(1)	**GFB20864**
SD1		
early engines *With separate pump & reservoir.*	(1)	**GCB20825**
later engines *With combined pump & reservoir.*	(1)	**GFB20864**
Steering pump drive belt - Range Rover;		
1970 to 1994 *With separate belt for p.a.s.*	(1)	**ERC675**
1995 onwards *With serpentine drivebelt.*		
non air con	(1)	**ERR4461**
with air con	(1)	**ERR4623**
Air con compressor drive belt - saloon/sports;		
TR8	(1)	**GCB10914**
SD1	(2)	**GFB20768**
Air con compressor drive belt - Range Rover;		
up to 1994 *With separate drivebelt.*	(1)	**611612**
1995 onwards *With serpentine drivebelt.*	(1)	**ERR4623**
Idler pulley belt - Range Rover *Up to Oct 1985.*	(1)	**ERC675**
Air pump drivebelt - detoxed V8 *Range Rover with detoxed carb engine.*	(1)	**RTC3267**

DRIVE PLATE - AUTO
SALOON/SPORTS

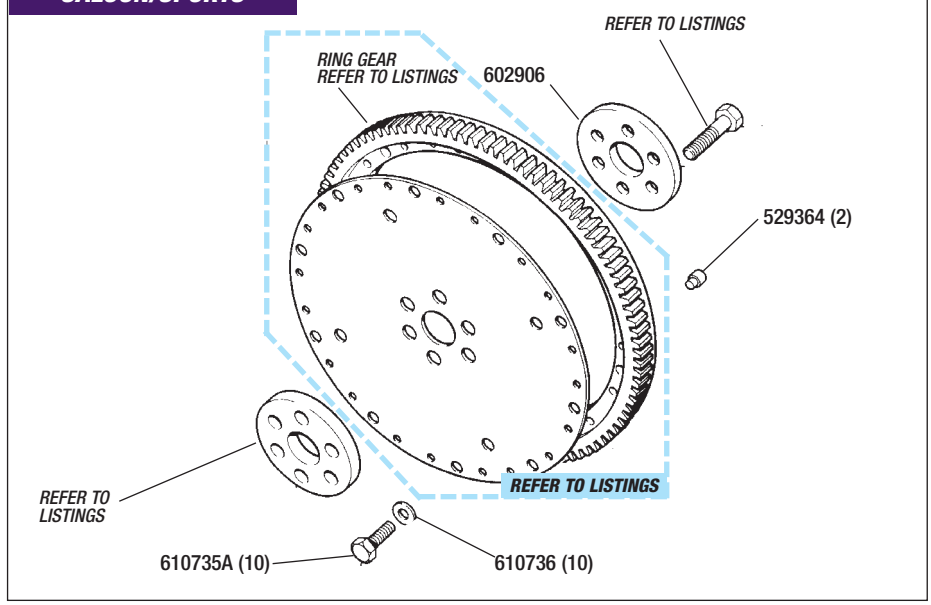

V8 Flywheel & Driveplate

All parts listed are suitable for saloon, sports and 4x4 applications unless otherwise stated.

Description	Qty Req.	Part No.
Flywheel (manual) *(Includes ring gear)*;		
saloon/sports *Suitable for 9.5"/240mm clutch.*		
standard	(1)	**612368**
lightened	(1)	**612368L**
Range Rover *Suitable for 10.5"/266.5mm clutch.* *Note: will not fit inside standard saloon/sports bellhousing.*		
all Classic models	(1)	**ERR5575**
Series 2 Range Rover	(1)	**ERR5396**
Ring gear - all manual flywheels	(1)	**611323**
Bolt - flywheel to crankshaft;		
saloon/sports	(6)	**255466**
4x4	(6)	**SH607081**
Dowel - clutch locating	(3)	**502116**
Driveplate (automatic);		
saloon/sports		
Borg Warner	(1)	**603341**
GM180	(1)	**RKC5805**
Range Rover		
3-sp *Less ring gear*	(1)	**FRC5005**
4-sp - complete assembly		
1986 to Series 2 Range Rover	(1)	**FRC7851**
Series 2 Range Rover	(1)	**ERR5658**
Bolt - driveplate to crankshaft;		
saloon/sports		
Borg Warner	(6)	**602905**
GM180	(6)	**ULC5091**
Range Rover		
all *(except Series 2 Range Rover)*	(6)	**SS607061**
Series 2 Range Rover	(6)	**SS607120**
Ring gear - all automatic vehicles *Not including Series 2 Range Rover, which is not available separately.*	(1)	**603340**
Bolt - ring gear to driveplate;		
saloon/sports	(10)	**610735**
Range Rover	(10)	**FTC4388**
Washer - ring gear to drive plate *All automatic vehicles.*	(10)	**610736**
Dowel - auto drive plate	(2)	**529364**
Spacer - driveplate to crankshaft (auto);		
saloon/sports	(1)	**602906**
Range Rover		
3-sp	(1)	**FRC5003**
4-sp up to Series 2 Range Rover	(1)	**FTC651**
Spacer - to torque converter - saloon/sports;		
Borg Warner	(1)	**90603295**
GM180	(1)	**TKC7350**
Spigot aligner - Range Rover;		
3-sp	(1)	**FRC5006**
4-sp to Series 2 Range Rover	(1)	**FRC7075**
Series 2 Range Rover	(1)	**FTC4606**
Bolt - spigot aligner - Range Rover;		
3-sp	(4)	**SH110251**
4-sp to Series 2 Range Rover	(4)	**BH110111**
Series 2 Range Rover		
4.0		
up to eng 593A	(4)	**FS110141M**
eng 594A onwards	(4)	**FS110251L**
4.6		
up to eng. 450A	(4)	**FS110141M**
eng 451A onwards	(4)	**FS110251L**
Washer - spigot aligner bolt *All auto Range Rovers except Series 2 Range Rover.*	(4)	**WL110001**
Converter drive plate - auto *4-sp auto Range Rovers, 1986 to Series 2 Range Rover.*	(1)	**FRC7081**
Buttress ring - 4-sp auto Range Rover;		
1986 to Series 2 Range Rover	(1)	**FRC7080**
Series 2 Range Rover	(1)	**FTC1117**
Selective shim - torque converter height; *4-sp auto Range Rover, 1986 to Series 2 Range Rover.*		
1.25mm	(A/R)	**FRC9203**
1.45mm	(A/R)	**FRC9205**
1.65mm	(A/R)	**FRC9207**
1.85mm	(A/R)	**FRC9209**
2.05mm	(A/R)	**FRC9211**
Selective shim - torque converter height; *Series 2 Range Rover only.*		
1.20/1.25	(A/R)	**FTC1680**
1.30/1.35	(A/R)	**FTC1681**
1.40/1.45	(A/R)	**FTC1682**
1.50/1.55	(A/R)	**FTC1683**
1.60/1.65	(A/R)	**FTC1684**
1.70/1.75	(A/R)	**FTC1685**
1.80/1.85	(A/R)	**FTC1686**
1.90/1.95	(A/R)	**FTC1687**
2.00/2.05	(A/R)	**FTC1688**
2.10/2.15	(A/R)	**FTC1689**

FLYWHEEL - MANUAL

Description	Qty Req.	Part No.

V8 Pistons

Piston set;
Piston sets comprise 8 pistons complete with rings & gudgeon pins.

3.5 litre
low compression (8.13:1 cr) - TR8 USA.
See Single Piston section for other low comp pistons.

standard size	(1)	**RB7104**
oversize + 0.020"	(1)	**RB7104.020**
oversize + 0.040"	(1)	**RB7104.040**

standard compression (9.35:1 cr) - SD1 carbs.

standard size	(1)	**RB7246**
oversize + 0.020"	(1)	**RB7246.020**
oversize + 0.040"	(1)	**RB7246.040**

Vitesse compression (9.75:1 cr) - SD1 Injection.

standard size	(1)	**RB7342**
oversize + 0.020"	(1)	**RB7342.020**
oversize + 0.040"	(1)	**RB7342.040**

high compression (10.5:1 cr) - TR7 V8 & P6.

standard size	(1)	**RB7309**
oversize + 0.020"	(1)	**RB7309.020**
oversize + 0.040"	(1)	**RB7309.040**

3.9 litre
Standard size, oversize also available.

low compression (8.13:1 cr)	(1)	**RB7485KLC**
high comp (9.35:1 cr)	(1)	**RB7485KHC**

4.2, 4.0 & 4.6 litre **See Single Pistons**

Single Piston;
Supplied with rings & gudgeon pin.

4.2 litre - 8.94:1 cr	(8)	**STC1191S**

4.0 litre Series 2 Range Rover type
Offset gudgeon type - standard size only.

low comp (8.13:1 cr)	(8)	**ERR5555**
high comp (9.35:1 cr)	(8)	**ERR5553**

4.6 litre Series 2 Range Rover type
Offset gudgeon type - standard size only.

low comp (8.13:1 cr)	(8)	**ERR5556**
high comp (9.35:1 cr)	(8)	**ERR5554**

Cylinder liner set - 3.9 litre (1) **RB7486**
Set of 8 liners for converting 3.5 engines to 3.9 litre bore. Also suitable for replacing the liners in an existing 3.9 litre (or larger capacity) engine.

Piston & liner set - 3.9 litre (1) **RB2029**
*As **RB7486**, but kit also includes standard size 9.35:1 compression pistons and rings, for 3.9 conversions.*

4.3 & 4.8 litre stroker kits;
Includes new 86mm stroke crankshaft, con rods, pistons/rings & bearings. 4.3 kit fits to 3.5 litre engine (20 thou rebore required) for 4.3 litres. 4.8 kit fits 3.9 litre engine (94mm bore) for 4.8 litres.

4.3 litre kit	(1)	**RB7678**
4.8 litre kit	(1)	**RB7677**

NEW 3.9 PISTON & ROD

V8 Piston Rings

Piston rings;
Supplied as engine set.

3.5 litre
8.13, 8.25, 9.35 & 9.75:1 compressions

standard size	(1)	**RB7358**
oversize + 0.020"	(1)	**RB7358.020**
oversize + 0.040"	(1)	**RB7358.040**

10.5:1 compression (P6)

standard size	(1)	**RB7421**
oversize + 0.020"	(1)	**RB7421.020**
oversize + 0.040"	(1)	**RB7421.040**

3.9 & 4.2 litre;
High & low compression ratio.

standard size	(1)	**RB7538**
oversize + 0.020"	(1)	**RB7538.020**
4.0 & 4.6 (standard size)	(1)	**STC1427**

High & low comp ratio.

HIGH PERFORMANCE BIG-END BOLT/NUT KIT RB7500

3.9 PISTON & LINER SET

V8 CON ROD & BEARING SETS

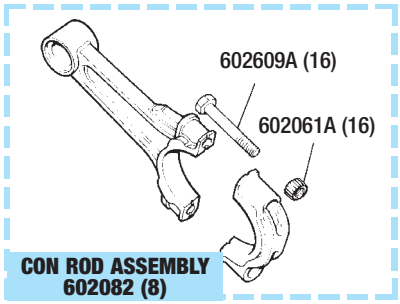

CON ROD ASSEMBLY 602082 (8)

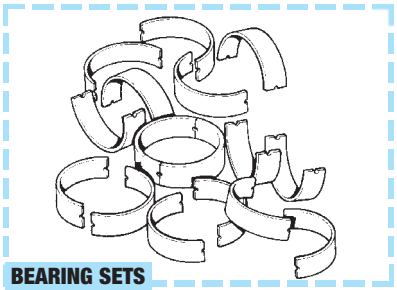

BEARING SETS

V8 Con Rod & Bearings

Con rod assembly;
3.5, 3.9 & 4.2 litre;
single

new	(8)	**602082**
reconditioned	(8)	**602082R**
engine set (new)	(1)	**602082K**
4.0 litre - new	(8)	**ERR4837**
4.6 litre - new	(8)	**ERR5145**

Bolt - con rod;

3.5 3.9 & 4.2 litre	(16)	**602609**
4.0 & 4.6 litre	(16)	**ERR1772**

Series 2 Range Rover type.

Nut - con rod	(16)	**602061A**

Not Series 2 Range Rover.

Big end bolt/nut kit	(1)	**RB7500**

Engine set of high performance ARP forged chrome moly' steel bolts & nuts. Superior to standard bolts.
Not suitable for Series 2 Range Rover.

Bearing set - big end - standard;
All engines except Series 2 Range Rover.

standard size	(1)	**RTC2117**
oversize + 0.010"	(1)	**RTC2117.010**
oversize + 0.020"	(1)	**RTC2117.020**
oversize + 0.030"	(1)	**RTC2117.030**
oversize + 0.040"	(1)	**RTC2117.040**
oversize + 0.060"	(1)	**RTC2117.060**

Bearing set - big end - 4.0 & 4.6(1) **ERR1773**
Series 2 Range Rover. Standard size.

Bearing set - big end - heavy duty;
All engines except Series 2 Range Rover.

standard size	(1)	**RB7451**
oversize + 0.010"	(1)	**RB7451.010**
oversize + 0.020"	(1)	**RB7451.020**
oversize + 0.030"	(1)	**RB7451.030**

TO ORDER: 01522 568000
www.rimmerbros.co.uk

Description | Qty Req. | Part No.

V8 Oil Pump & Filter

Differences Between Oil Pumps

The oil pump of the Rover V8 engine, from its introduction in the 1960s until late 1994, comprises a pair of pump gears which rotate inside a housing in the timing cover. One gear - the idler - is driven by the other, which includes a shaft that is driven off the end of the distributor. The distributor, in turn, is driven by a skew gear on the end of the camshaft.
Pre SD1-era Rover V8 engines (including Rover P5, P6 and early Range Rover) feature a pair of "short" oil pump gears, the driven shaft of which has a slot into which the tooth of the distributor shaft engages.
From 1976 (SD1-era), the oil pump is improved by longer gears, the driven shaft of which is now toothed to engage in a slot in the distributor shaft.
For two reasons, the two types are not interchangeable:
1. the longer gears of a post-1976 engine will not fit into the housing of a pre-76 timing cover.
2. the pre-76 distributor will not engage with the shaft of a later oil pump gear.
However, timing covers are fully interchangeable, which means that an early engine can benefit from the later oil pump arrangement as long as the whole timing cover, complete with distributor, is fitted.
Alternatively, we supply an oil pump uprating kit (RB7480), specifically for pre-76 engines, which features a spacer for the oil pump cover in order to accommodate the longer gears supplied in the kit. The gears also feature the early type of distributor engagement slot.
From late 1994, a redesigned timing cover, incorporating an integral crank-driven oil pump, is fitted to Land Rover V8 engines. This supersedes the earlier, distributor-driven oil pump. However, the later arrangement, while more efficient, is ***not*** *a straight swop for the earlier timing cover, as a longer crankshaft nose is required to drive the oil pump. In addition, ancillaries, such as water pump, alternator and power steering pump would have to be changed.*

Oil filter;		
saloon/sports		
up to 1976 *(pre SD1 type)*	(1)	**GFE145**
1976 onwards *(TR8/SD1)*	(1)	**GFE187**
4x4		
early engines *Engine nos: 341,355 & 359.*	(1)	**RTC3186**
all other engines *Including Series 2 Range Rover.*	(1)	**ERR3340**
Oil pump cover;		
early engines *Pre SD1-type engines.*	(1)	**602485**
all other engines *Up to late 1994.* *Complete with relief valve & spring, plus oil pressure switch.*	(1)	**BHM1554**

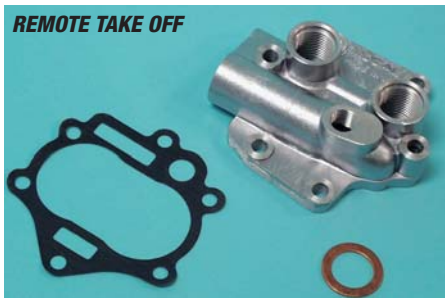

Oil pump cover/remote take-off	(1)	**RO1105**
Very low profile oil pump cover & relief valve housing for maximum clearance. Use with remote oil filter mounting kit.		

Remote oil filter mounting kit	(1)	**RB7116**
Allows mounting of oil filter away from engine (Rh inner flitch). *Kit includes filter housing, hoses & mountings.* *Not suitable for Series 2 Range Rover.*		

COMPONENT & COMMISSION NUMBERS
Where commission and/or component serial numbers are quoted in this parts catalogue (to help identify factory specification changes), they refer to components and/or parts when the vehicle was new, and not subsequent replacements.

Description | Qty Req. | Part No.

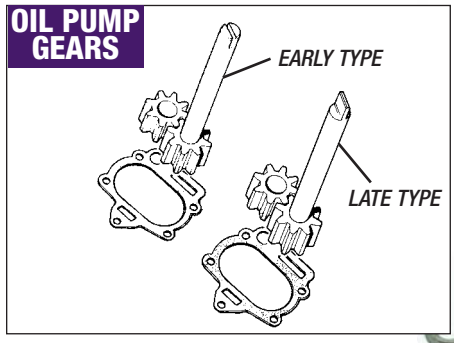

Oil pump repair kit	(1)	**RTC2044**
Suitable for all engines with separate oil pump (pre-1994). *Includes pressure relief valve, spring & gasket.*		
Uprated pressure relief valve spring	(1)	**RB7457**
For all separate oil pump models (pre-1994). Increases oil pressure by approx. 10 psi.		
Gear with shaft - oil pump;		
early engines *Short gear with slotted shaft (rigid).*	(1)	**602018**
all other engines *Longer gear with toothed shaft (floppy).*	(1)	**ERC1351A**
Idler gear - oil pump;		
early engines *Short gear.*	(1)	**602017**
all other engines *Longer gear.*	(1)	**614037**
Uprating kit - oil pump	(1)	**RB7480**
Early models only (pre-SD1). *Kit includes spacer plate and longer gears to uprate early pumps to later specification. Increases pressure and volume.*		
Gasket - oil pump cover	(1)	**90602072A**
Bolt - pump mounting;		
7/8"	(3)	**ERR7370**
1 1/4"	(2)	**602912**
1 9/16"	(1)	**602913**
Blanking plug - oil pump *Pressure switch outlet.*	(1)	**151203**
Washer *For blanking plug.*	(1)	**243967**
Oil pressure switch;		
TR8	(1)	**GPS117**
SD1		
3 prong type	(1)	**GPS123**
single prong type	(1)	**GPS110**
Range Rover	(1)	**STC4104**
Washer *(For pressure switch)*	(1)	**243967**
Oil pressure transmitter - early vehicles;		
SD1 engines		
'0 - 100' psi gauge	(1)	**DRC242**
'0 - 60' psi gauge	(1)	**DRC2479**
Range Rover		
early engines *Engine nos: 341,355 & 359*	(1)	**555947**
other engines (where fitted)	(1)	**DRC2479**
Washer *(Pressure transmitter)*	(1)	**243967**
Oil temperature transmitter; *Where fitted.*		
for 120ºc gauges	(1)	**560794**
for 140ºc gauges	(1)	**623050**
for 'C - MAX' gauges	(1)	**PRC2236**
Adaptor - oil temperature transmitter;		
Range Rovers up to 1982	(1)	**611514**
Range Rovers from 1982 on	(1)	**273166**
Oil pressure gauge kit	(1)	**RX1351**
Aftermarket capillary type. Includes gauge & fittings.		
Oil pressure/water temp gauge kit	(1)	**RX1351W**
As above, Dual function gauge.		
Bracket - oil pressure gauge	(1)	**RB7050**
Oil pump priming tool;		
For efficient priming of the oil pump before initial start-up. *Priming tool engages with the oil pump shaft through the distributor aperture in the timing cover (requires removal of distributor). Oil pump can then be primed using an electric/cordless drill. No need for petroleum jelly!* *Nb. with the rocker covers removed, a visible oil supply to the rocker gear is confirmation that the system is primed.*		
early type oil pump shaft *Slotted shaft (see illustration above).*	(1)	**RX1431E**
late type oil pump shaft *Toothed shaft (see illustration above).*	(1)	**RX1431L**

Description | Qty Req. | Part No.

V8 Oil Cooler (Engine)

If high oil temperatures are a problem, for example when towing, the V8 engine will benefit from the fitting of an oil cooler. We recommend fitting a thermostat at the same time, to avoid overcooling.
Note: An oil cooler was incorporated into the Range Rover's coolant radiator with the introduction of the 3.9 litre engine. The Series 2 Range Rover has a separate oil cooler.

UNIVERSAL OIL COOLER

Oil cooler kit; *Includes radiator, hoses and all fittings.*		
saloon/sports	(1)	**RB7260**
Range Rover *All models up to 1990.*	(1)	**RA1089**
Thermostat - oil cooler	(1)	**RS1456**

RANGE ROVER 3.9 OIL COOLER & COMPONENTS

Oil cooler take-off - 3.9 engine;		
up to VIN JA624755 (1992)	(1)	**ERC8501**
from VIN KA624756 (1993)	(1)	**ERR2490**
Adaptor - oil filter	(1)	**ERC2226**
O-ring	(1)	**ERR852**
Oil cooler hose;		
early 3.9 engine - up to 1991 (VIN HA)		
engine to cooler		
to VIN FA(1)		**NTC6289**
VIN GA onwards	(1)	**NTC5972**
cooler to engine		
to VIN FA	(1)	**NTC5620**
VIN GA onwards	(1)	**ESR137**
3.9 & 4.2 - 1992 (VIN JA) onwards;		
engine to cooler		
to VIN JA624755	(1)	**ESR356**
VIN KA ('93) to LA ('94)	(1)	**ESR1672**
VIN MA (1995) onwards	(1)	**PBP101150**
cooler to engine		
to VIN JA624755	(1)	**ESR355**
VIN KA ('93) to LA ('94)	(1)	**ESR1671**
VIN MA (1995) onwards	(1)	**PBP101160**
Adaptor - hose to radiator - all models;		
to VIN JA (1992)	(2)	**NTC3858**
from VIN KA (1993)	(2)	**ESR1262**
Adaptor - pump take-off to hose - all models;		
to VIN JA (1992)	(2)	**ETC9064**
from VIN KA (1993)	(2)	**ESR1239**
Sealing ring - adaptor;		
to VIN LA (1994)	(2)	**ETC9065**
VIN MA (1995) onwards	(4)	**ESR1594L**
Oil cooler - Series 2 Range Rover;		
4.0 litre	(1)	**ESR3204**
4.6 litre	(1)	**ESR3205**
Oil cooler hoses - Series 2 Range Rover;		
engine to cooler	(1)	**ESR4415**
cooler to engine	(1)	**ESR2697**
Sealing ring - cooler hoses	(4)	**ESR2237**

OIL PRESSURE GAUGES

Description	Qty Req.	Part No.

V8 Clutch Components

See V8 GEARBOX-Clutch Housing/Operation, for full details & illustration of clutch release mechanism. Refer to TR7 section for master & slave cylinder.

NON SELF CENTERING TYPE CLUTCH

Original fitment to TR8.

Clutch Kit *Includes cover, plate & release bearing.*	(1)	**RB7335**
Clutch Cover	(1)	**GCC180**
Clutch Plate	(1)	**GCP242**
Release Bearing	(1)	**GRB209**
Carrier-Release Bearing	(1)	**FRC5368A**

SELF CENTERING TYPE CLUTCH

Later Fitment to SD1.

Can be fitted to all models providing it is fitted as a 3 piece kit.

Clutch Kit;		
Standard *Includes cover, plate & release bearing.*	(1)	**RB7491**
Uprated *Includes cover, plate only.*	(1)	**RB7491UR**
Clutch Cover *(standard)*	(1)	**GCC90247**
Clutch Plate *(standard)*	(1)	**GCP242**
Release Bearing/ Sleeve Assembly	(1)	**GRB90247**

ALL CLUTCH TYPES

Bolt *(Clutch cover retaining)*	(6)	**SH605071**
Washer-Spring *(SH605071)*	(6)	**GHF332**
Clutch Alignment Tool	(1)	**RX1386B**
Clutch Operating Lever	(1)	**LBU1234**
Slipper Pad *For operating lever LBU1234.*	(2)	**159003A**
Clip *(Push rod to lever LBU1234)*	(1)	**UKC1806**
Pivot Pin *(For operating lever)*	(1)	**UKC13**
Bolt Kit *Bellhousing to Block/Gearbox. Includes bolts, nuts, washers.*	(1)	**RB7130**

TR8 (Original) Hydraulic Clutch Pipes/Hoses

Please refer to TR7 section for Master Cylinder & Slave Cylinder.

Flexible Hose (braided) *Connects between pipes UKC8454 & UKC8456.*	(1)	**UKC8455GR**
Hydraulic Pipe *Flexible hose to Slave cylinder.*	(1)	**GVP3001**
Retaining Clip *Locates GVP3001 hydraulic pipe.*	(1)	**516510**

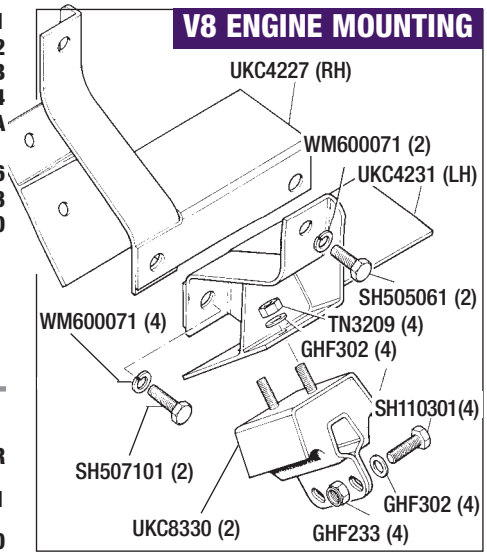

V8 Engine Mountings

Note: to enable correct fitting of tubular manifolds and exhaust system, ensure engine mountings/brackets fit behind (and not in front of) subframe support brackets.

Engine Mounting *(Rubber)*	(2)	**UKC8330**
Setscrew *(Mounting to subframe)*	(4)	**SH110301**
Washer-Flat	(4)	**GHF302**
Nut-Nyloc	(4)	**GHF233**
Nut-Locking *(Mounting to bracket)*	(4)	**TN3209**
Washer-Flat	(4)	**GHF302**
Engine Mounting Bracket		
Rh	(1)	**UKC4227**
Lh	(1)	**UKC4231**
Setscrew *(Bracket to cyl block)*	(2)	**SH507101**
Setscrew *(Bracket to cyl block)*	(2)	**SH505061**
Washer-Spring	(6)	**WM600071**

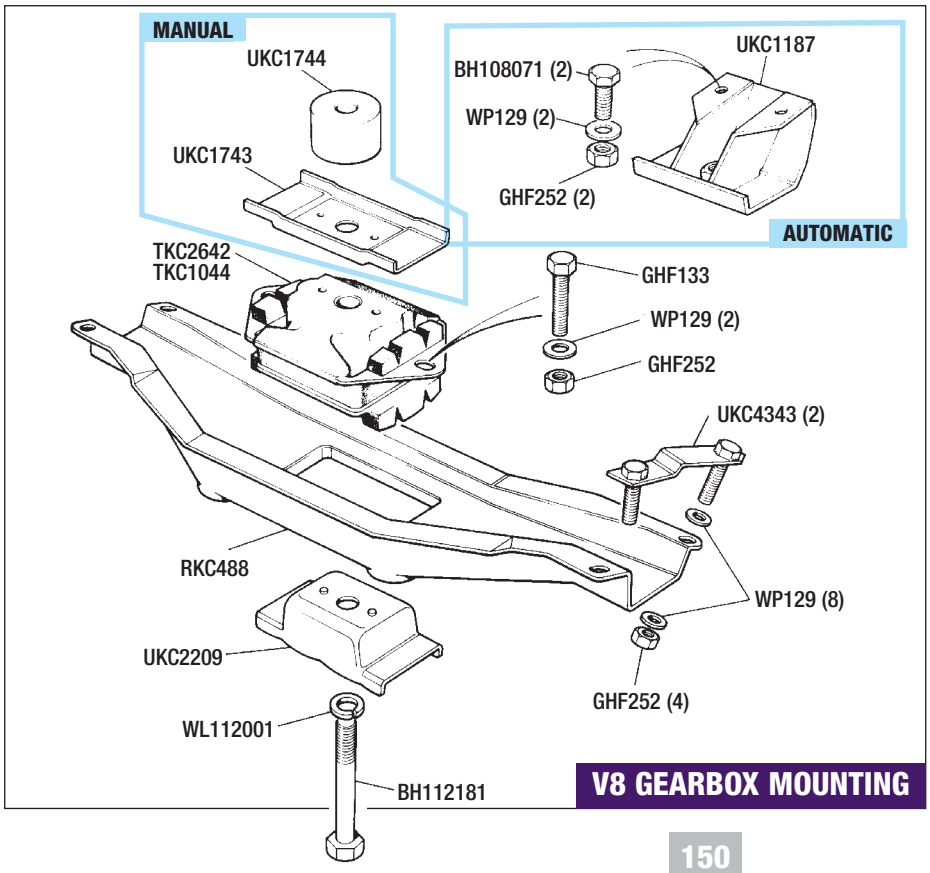

V8 Gearbox Mounting

Gearbox Mounting *(Rubber);*		
Original TR8 Spec' *Harder than standard TR7 mounting.*	(1)	**TKC2642**
TR7/TR8 (Standard)	(1)	**TKC1044**
Crossmember	(1)	**RKC488**
Setscrew	(2)	**GHF133**
Washer-Flat	(2)	**WP129**
Nut-Locking	(2)	**GHF252**
Captive Plate Assembly	(2)	**UKC4343**
Washer	(8)	**WP129**
Nut-Locking	(4)	**GHF252**
Restrictor/Mounting Plate *(Lower)*	(1)	**UKC2209**
Tie Rod *(Engine to gearbox)*	(1)	**UKC5670**
Distance Piece/Spacer	(1)	**UKC5345**
Bolt *(Crossmember/gearbox mounting)*	(1)	**BH112181**
Washer-Spring	(1)	**WL112001**

MANUAL VEHICLES ONLY

Restrictor/Mounting Plate *(Upper)*	(1)	**UKC1743**
Spacer *(Mounting to gearbox)*	(1)	**UKC1744**

AUTOMATIC VEHICLES ONLY

Restrictor/Mounting Plate *(Upper)*	(1)	**UKC1187**
Bolt	(2)	**BH108071**
Washer-Plain	(2)	**WP129**
Nut-Locking	(2)	**GHF252**

TO ORDER: 01522 568000
www.rimmerbros.co.uk

V8 Water Pump/Pulley/ Cooling Fan

TR8 CONVERSIONS

Water Pump & Fan Clearance

To allow sufficient clearance for the water pump, we supply the brackets required to move the radiator forward. It is usually not possible to re-use the SD1 carb engine fan assembly due to clearance problems, so we recommend the fitting of the TR8 water pump (GWP204) in conjunction with a heavy duty Kenlowe Electric Fan Kit (RS1537) - which mounts in front of the radiator.

WATER PUMPS & FITTINGS

Description	Qty Req.	Part No.
Water Pump *(Inc gasket less pulley)*		
'P6 3500' *Short nose pump, suitable for confined spaces. Use with matching pulley and crank pulley.*	(1)	**GWP310**
TR8 Original type *Bolt-on type Viscous coupling/extension.*	(1)	**GWP204**
SD1 type *All SD1 carb (non a/c) engines, 1976 on.*	(1)	**GWP2150**
SD1 Efi type *All SD1 Efi engines. Screw on viscous coupling (LH thread). Shorter nosed than GWP2150.*	(1)	**GWP2149**
SD1 *All SD1 carb (a/c) engines, 1982 on.*	(1)	**GWP2148**
Gasket *(Pump to timing cover)*	(1)	**610756**
Bolt *(Pump to timing cover)*	(5)	**BH504091**
Washer *(For BH504091)*	(5)	**2203**

Please enquire for SD1 type viscous couplings and cooling fans.

HOSES-HEATER FEED/RETURN

From/To Water Pump/Steel Pipes (in engine 'V').
*See also; **V8 Radiator Hoses & V8 Heater Hoses/Pipes.***

Description	Qty Req.	Part No.
Feed Hose *From water pump to straight steel pipe 90611532.*	(1)	**ERC2278**
Return Hose *From cranked steel pipe 603049 to water pump.*	(1)	**ERC2279**
Hose Clips *For ERC2278/ERC2279.*	(4)	**GHC709**

PULLEY/FITTINGS & FAN BELT

Description	Qty Req.	Part No.
Pulley *(Original)* *For use with water pumps GWP310, GWP204 & GWP2150 when original TR8 water pump extension drive/viscous/fan **is fitted.***	(1)	**ERC3166**
Pulley *(Alternative)* *For use with water pumps GWP2148, GWP2149 and GWP2150 if fitting Kenlowe Electric fan, and when the original TR8 water pump extension drive/viscous/fan is **not fitted.***	(1)	**ERC5792**
Setscrew*	(3)	**255205A**
Washer-Locking* **Pulley to water pump.*	(3)	**GHF331**
Fan Belt	(1)	**GFB215**

HEAVY DUTY KENLOWE ELECTRIC FAN (V8)

Description	Qty Req.	Part No.
Heavy Duty Kenlowe Electric Fan Kit (V8) *16" dia fan. Not suitable for air-con vehicles.*	(1)	**RS1537**
Sensor only (Replacement) *For Kenlowe fan.*	(1)	**KLM1416**

V8 WATER PUMP & COOLING FAN

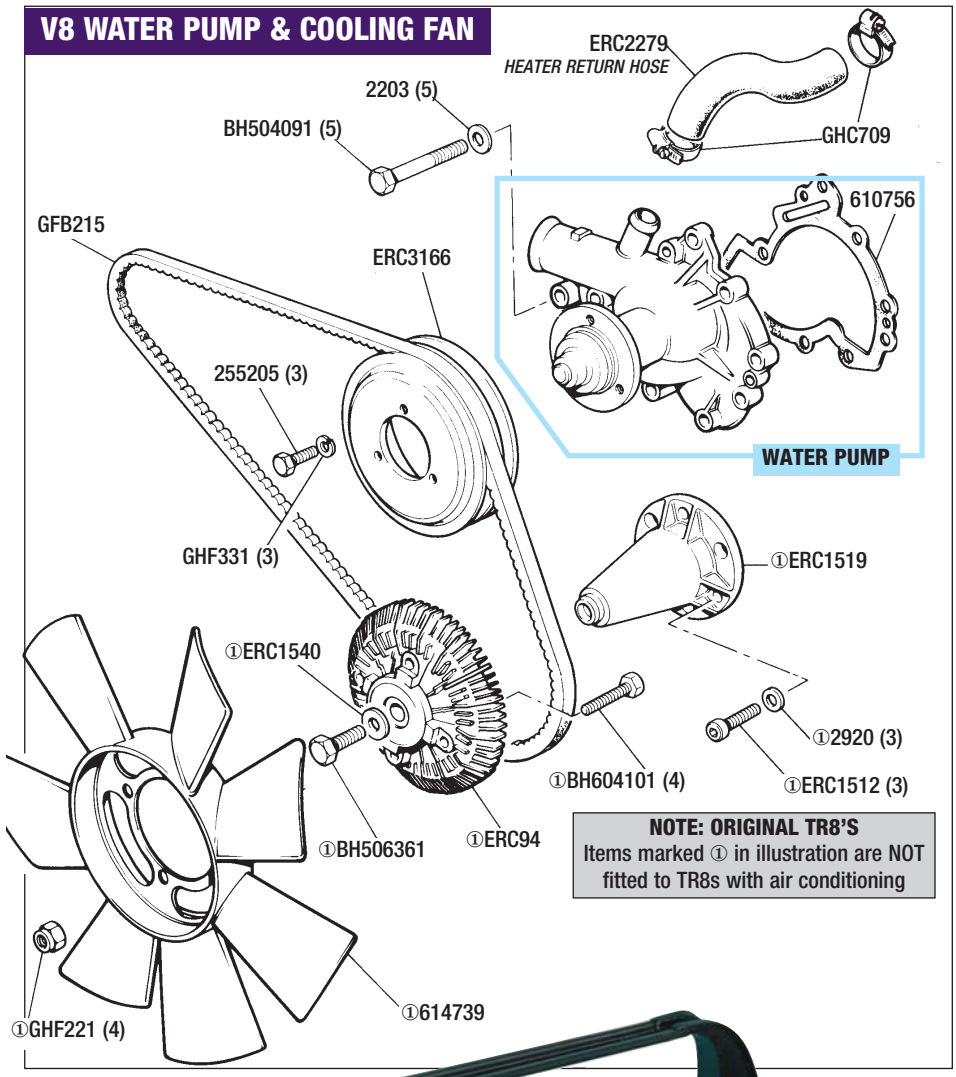

NOTE: ORIGINAL TR8'S
Items marked ① in illustration are NOT fitted to TR8s with air conditioning

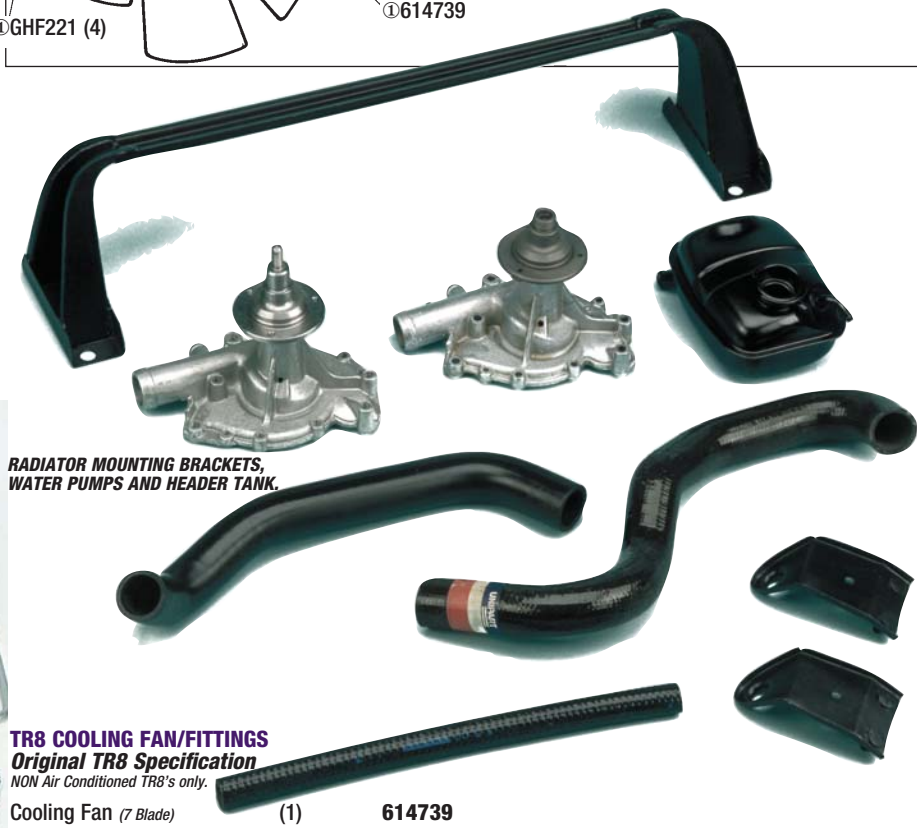

RADIATOR MOUNTING BRACKETS, WATER PUMPS AND HEADER TANK.

TR8 COOLING FAN/FITTINGS

Original TR8 Specification

NON Air Conditioned TR8's only.

Description	Qty Req.	Part No.
Cooling Fan *(7 Blade)*	(1)	**614739**
Setscrew+	(4)	**BH604101**
Nut-Locking+ *+Fan to viscous coupling.*	(4)	**GHF221**
Viscous Coupling	(1)	**ERC94**
Setscrew*	(1)	**BH506361L**
Spacer/Washer* **Viscous coupling to extension.*	(1)	**ERC1540**
Water Pump Extension Drive	(1)	**ERC1519**
Screw-Special	(3)	**ERC1512**
Washer	(3)	**2920**

V8 Drive Belts

Description	Qty Req.	Part No.
Fan Belt	(1)	**GFB215**
Power Steering Belt	(1)	**GFB20864**
Air Compressor Belt *When air conditioning fitted.*	(1)	**GCB10914**

Description Qty Req. Part No.

V8 Radiator & Hoses

IMPORTANT NOTE;
When converting a TR7 to TR8 specification, it is essential that the TR8 radiator is fitted which can adequately cope with cooling the V8. Our TR8 radiators are fitted with the correct core and neck diameters with hose inlet/outlets positioned correctly to match the engines cooling system. To allow sufficient clearance for the water pump the radiator has to be moved forward by using the TR8 upper and lower mounting brackets.
We will accept a standard TR7 radiator in exchange for a TR8 spec.

RADIATOR & FITTINGS

Description	Qty Req.	Part No.
Radiator (TR8 specification);		
New	(1)	**RKC3114**
Reconditioned *(New core)*	(1)	**RKC3114R**
Blanking Board		
Rh	(1)	**XKC2954**
Lh	(1)	**XKC2953**
Fastener	(4)	**ZKC1275**
Blanking Board *(Upper)*	(1)	**WKC3631**
Setscrew *(For WKC3631)*	(2)	**AB610051**
Washer-Flat *(For AB610051)*	(2)	**GHF300**
'Captive' Nut *(For AB610051)*	(2)	**AL610011**
Radiator Mounting Brackets;		
Upper	(2)	**UKC7988**
Lower	(1)	**RKC532**
See photo of brackets on previous page.		
Mounting Bush/Rubber *2 upper & 2 lower.*	(4)	**UKC2225**
Nut *(Top mounting brackets)*	(4)	**GHF213**
Washer-Spring *(For GHF213)*	(4)	**GHF382**
Washer-Flat *(For GHF213)*	(4)	**GHF312**
Setscrew *For lower mounting bracket RKC532.*	(4)	**FB108401**
Washer-Spring *(For FB108041)*	(4)	**GHF382**
Washer-Flat *(For FB108041)*	(4)	**GHF312**
Anti-freeze (Unipart)		
1 Litre	(a/r)	**GAC2018**
5 Litre	(a/r)	**GAC2019**
Holts Radweld *(250ml)*	(a/r)	**RX1508**

RADIATOR HOSES

Non air conditioned vehicles & TR8 Conversions

Description	Qty Req.	Part No.
Hose Kit *Inc all hoses for engine, radiator, & heater, and all hose clips.*	(1)	**RB7492**
Top Hose;		
Rh *Radiator to header tank.*	(1)	**UKC7891**
Lh *Radiator to thermostat housing.*	(1)	**GRH629**
Bottom Hose *To water pump.*	(1)	**GRH603**
Hose Clips;		
For Hoses *GRH629 & GRH603*	(4)	**GHC913**
For Hose *UKC7891*	(2)	**GHC405**

Air Conditioned Vehicles

Description	Qty Req.	Part No.
Hose Kit *Inc all hoses for engine, radiator, & heater, and all hose clips.*	(1)	**RB7497**
Top Hose		
Rh *Radiator to header tank.*	(1)	**UKC7803**
Lh *Radiator to thermostat housing.*	(1)	**GRH611**
Bottom Hose *To water pump.*	(1)	**GRH601**
Hose Clips;		
For Hoses *GRH611 & GRH601*	(4)	**GHC913**
For Hose *UKC7803*	(2)	**GHC405**

THERMOSTATIC FAN SWITCH

Original TR8's with Air Conditioning

Early Type;

Description	Qty Req.	Part No.
Thermostatic Fan Switch Sensor *Probe type.*	(1)	**BHM7285**
Seal *(For BHM7285)*	(1)	**URP1027**
Retaining Plate *(For BHM7285)*	(1)	**ARH2532**
Retaining Clip	(2)	**ARH2531**

Late Type;

Description	Qty Req.	Part No.
Thermostatic Fan Switch Sensor *Screw-in type.*	(1)	**TKC5532**
Sealing Washer	(1)	**C457593**

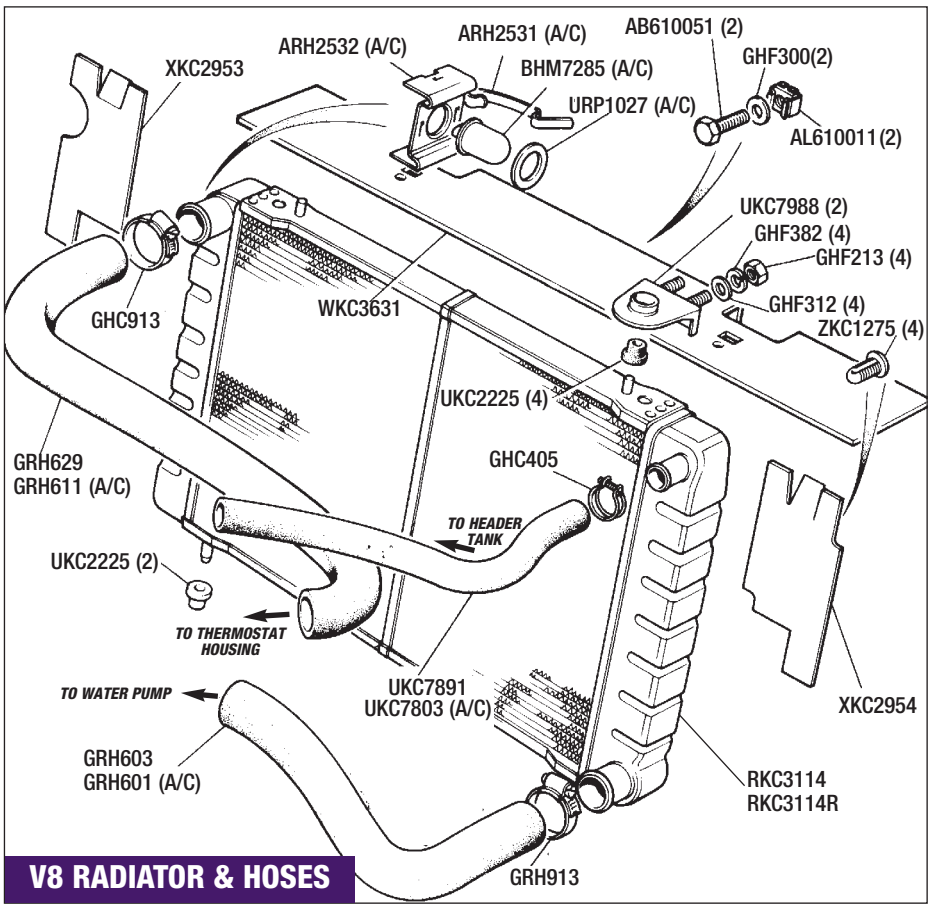

V8 RADIATOR & HOSES

V8 Temperature Sender & Thermostat

Description	Qty Req.	Part No.
Temperature sender unit - coolant; *Located at front of inlet manifold - all engines.*		
carb models		
air con	(1)	**PRC6317**
non air con	(1)	**GTR108**
efi models		
3.5 litre -		
air con	(1)	**PRC6317**
non air con	(1)	**GTR108**
3.9 litre *With & without air-con.*	(1)	**PRC7918**
Washer - temperature sender unit	(1)	**90568054**
Fan switch - thermostat housing *Range Rover.*	(1)	**PRC3505**
Washer - fan switch	(1)	**C457593**
Thermostat *(Suitable for all engines);*		
74°	(1)	**ETC4761**
82°	(1)	**GTS104**
88°	(1)	**GTS106**
Gasket - thermostat;		
Rover P6 type *With thermostat bypass in housing.*	(1)	**GTG116**
SD1/TR8	(1)	**GTG125**
Range Rover		
early engines *(Pre 1976)*	(1)	**610387**
all other engines	(1)	**ERR2429**
Thermostat housing;		
saloon/sports		
standard type *(Aluminium)*	(1)	**RB7211**
P6 type - steel *With integral bypass pipe. Suitable for Offenhauser or Edelbrock manifold with integral by-pass pipe.*	(1)	**RB7322**
Range Rover		
without electric fan switch		
eng nos: 341, 355, 359 only	(1)	**RB7322**
all other models	(1)	**ERC2139**
with integral electric fan switch *For air con fans. Switch not included.*		
air con	(1)	**ETC6135**
non air con	(1)	**ETC4596**

TO ORDER: 01522 568000
www.rimmerbros.co.uk

V8 Header Tank (Steel)

TR8 HEADER TANK CONVERSION

If converting an early TR7 fitted with the plastic type expansion bottle, it should be replaced with the Steel (Rh mounting) Header Tank - as fitted to late TR7's.

Description	Qty Req.	Part No.
Header Tank (Steel) *Right hand mounting (on inner flitch).*	(1)	**RKC4461**
Header Tank Mounting Kit *Includes upper/lower mounting brackets, upper seating pad, bolts, nuts, washers and pressure cap.*	(1)	**RKC4461FK**
Pressure Cap (15 Psi)	(1)	**GRC110**
Control Unit *'Low coolant level' warning switch.*	(1)	**RKC5259**
Hose Kits; *Inc all hoses for engine, radiator, & heater, and all hose clips.*		
Non Air conditioned vehicles	(1)	**RB7492**
Air conditioned vehicles	(1)	**RB7497**
Radiator Top Hose; *Header tank to radiator.*		
Non Air conditioned vehicles	(1)	**UKC7891**
Air conditioned vehicles	(1)	**UKC7803**
Hose Clips *(For UKC7891/UKC7803)*	(2)	**GHC405**
Hose *(To thermostat housing)*	(1)	**ULC2641**
Hose Clips *(For ULC2641)*	(2)	**GHC507**
Plastic Hose Tie	(1)	**BMK1900**
Overflow Hose *(Vents to atmosphere)*	(1)	**ULC2122**
Upper Tank Strap	(1)	**11H1196**
Seating Pad *(For 11H1196)*	(1)	**11H1197**
Setscrew *(Top to lower bracket)*	(2)	**SH106141**
Washer-Spring *(For SH106141)*	(2)	**WL106001**
Nut *(For SH106141)*	(2)	**GHF212**
Lower Tank Mounting Bracket	(1)	**TKC5592**
Setscrew *(Bracket to body)*	(3)	**SH108141**
Washer-Spring *(For SH108141)*	(3)	**GHF382**
Nut *(For SH108141)*	(3)	**GHF213**

V8 Heater Hoses/Pipes

Please refer to TR7 section for heater assembly details.

Description	Qty Req.	Part No.
Hose Kits; *Inc all hoses for engine, radiator,& heater, and all hose clips.*		
Non Air conditioned vehicles	(1)	**RB7492**
Air conditioned vehicles	(1)	**RB7497**
Heater Hoses; ***From/To Water Pump.***		
Feed Hose *From pump to straight steel pipe 90611532.*	(1)	**ERC2278**
Return Hose *From cranked steel pipe 603049 to pump.*	(1)	**ERC2279**
Hose Clips *For ERC2278/ERC2279.*	(4)	**GHC709**
Steel Water Pipes; ***Heater hose connection pipes. Located in engine Vee.***		
Feed Pipe *(Straight) Water pump to Heater.*	(1)	**90611532**
Return Pipe *(Cranked) Heater to Water Pump. Sits in vee.*	(1)	**603049**
Setscrew	(2)	**HU754**
Spring Washer	(2)	**GHF331**
Heater Hoses; ***To/From Heater unit.***		
Feed Hose *(Lower hose) From straight steel pipe 90611532 to heater.*	(1)	**UKC7257**
Return Hose *(Upper hose) From heater to cranked steel pipe 603049.*	(1)	**TKC2969**
Hose Clips *For UKC7257/TKC2969.*	(4)	**GHC608**

V8 Inlet Manifold & Fittings

Standard TR8/SD1 Manifold.

Description	Qty Req.	Part No.
Inlet Manifold *(TR8 & SD1 '76-'82)*	(1)	**ERC5484**
Inlet Manifold Gaskets; *Carb & injection engines.*		
Main 'V' gasket *(Manifold to heads)*		
Standard	(1)	**ERC3990**
Composite	(1)	**ERR7306**
End gasket/seal		
For standard gasket	(2)	**AJM645**
For composite gasket	(2)	**ERR7283**
Clamp *('V' gasket)*	(2)	**ERR7282**
Screw	(2)	**602236**
Gasket *(Carbs to manifold)*	(2)	**ERR4381**
Bolt (Manifold Fixing)	(9)	**BH506121**
Bolt (Manifold Fixing)	(3)	**BH506161**
Washer (Special)	(12)	**2204**

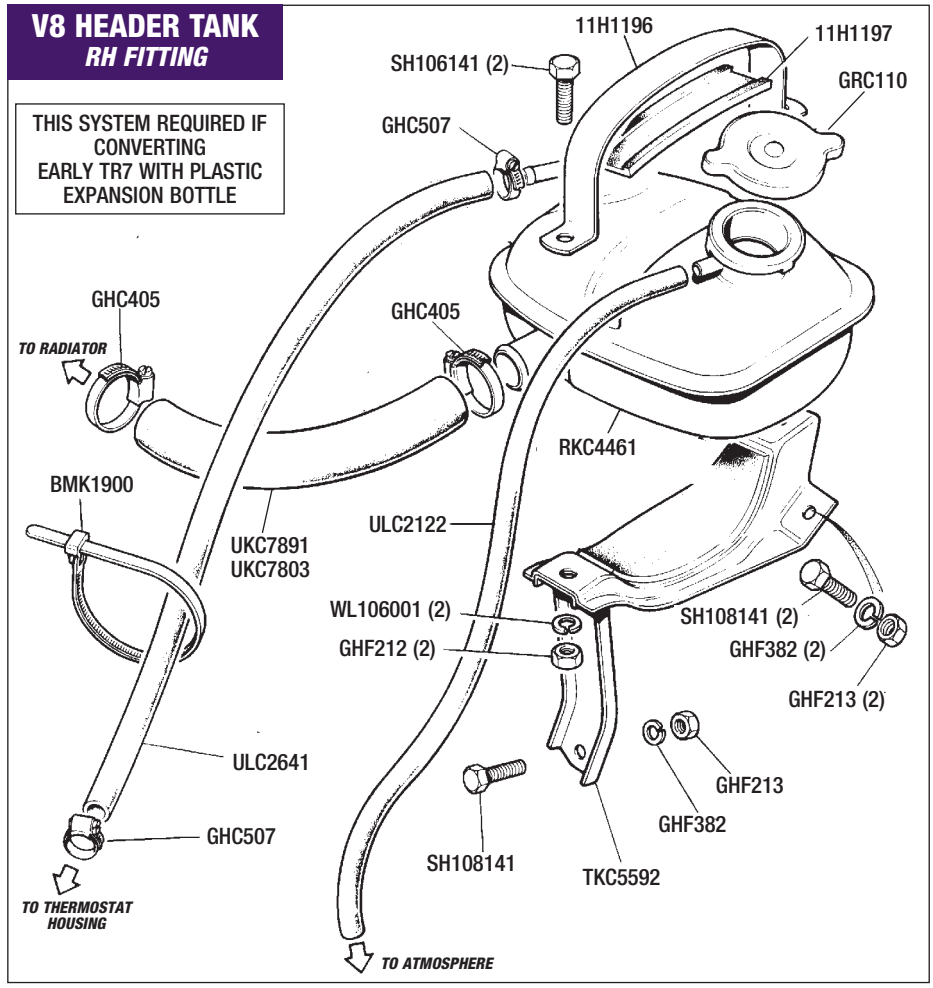

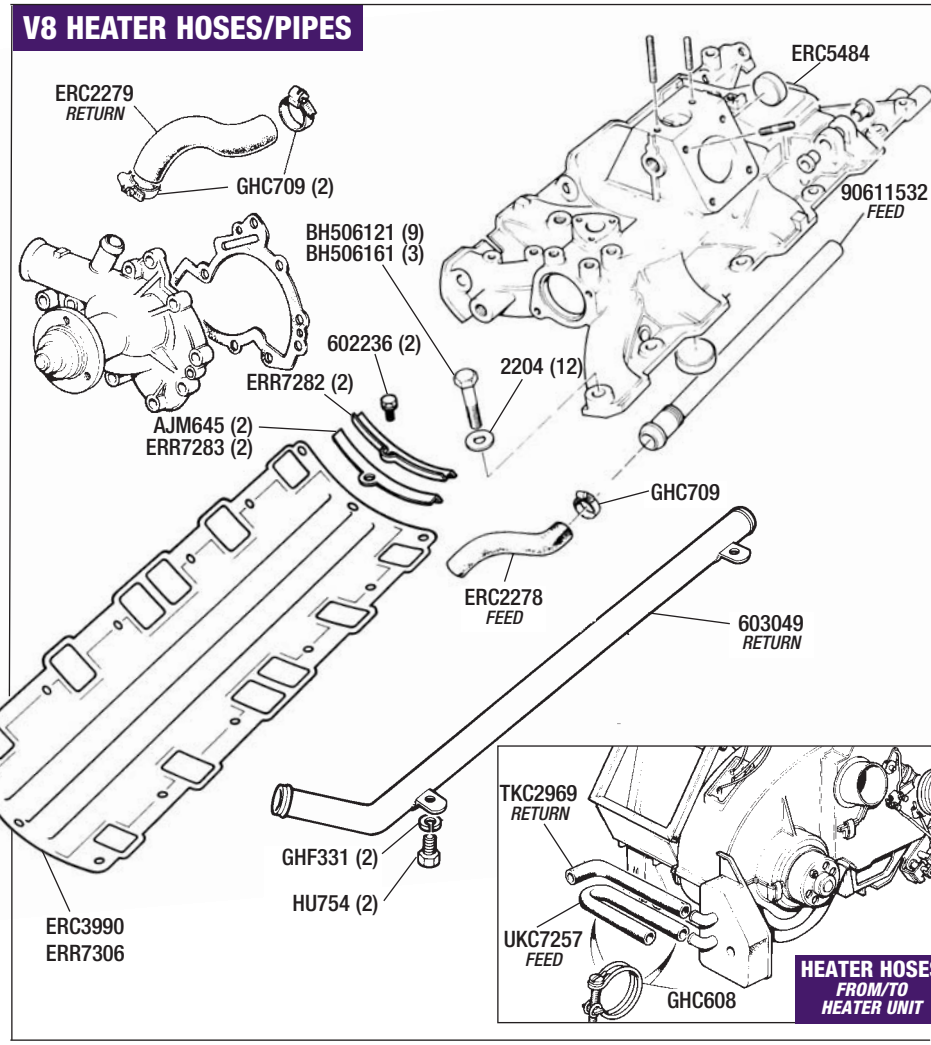

Description Qty Req. Part No.

CARB IDENTIFICATION

In order to select the correct parts, this section will help to identify the type of carbs fitted to your engine. It is for identification purposes only.

Carb Identification - Stromberg CD175 & SU HIF.

Both makes of carburettor have a silver tag - stamped with an identification number - which is attached to the carb by one of the dashpot retaining screws.
(Note; both rh & lh carbs have the same number but with an r or l suffix as appropriate). However, if the tag is missing, the engine number will help you to identify the carburettors, providing they have not been replaced by a previous owner. (For detailed information & specification of engine numbers, please refer to the 'V8 ENGINE' section on Page 132).

TR8

Original carb TR8s are fitted with a pair of Stromberg 175CDSET carbs, with an automatic choke.

ROVER SD1

*All Rover SD1 3500 saloons from 1976 to 1981 were equipped with a pair of SU HIF6 carburettors with a manual choke. The tag number on these carbs is **FZX1316R** (right hand carb) or **FZX1316L** (left hand).*
From 1982 until 1985, SD1 3500 carb engines were fitted with Stromberg CD175 carbs, incorporating a FASD (Fully Automatic Starting Device) on the side of the left hand carb. Easily identified by its blue plastic cover, the FASD is essentially a cold-start enrichment device.
Stromberg carbs have a stubby dashpot, compared to the SU's taller version.
*Finally, from 1985, the SUHIF6 was again fitted to some 3500 models. However, these were not the same carbs as the earlier ones, being considerably more complex in their cold-start enrichment operation. The tag numbers for these carbs are **FZX1456R** & **L**.*

RANGE ROVER

Two makes of carburettor are fitted to Range Rovers as standard equipment: the Zenith Stromberg CD175 - used exclusively from 1970 to 1986 - and the SU HIF, which was fitted for a short period (alongside the Stromberg) from 1986 until carbs were replaced by fuel injection.
The most obvious visual difference between the two types of carb is the dashpot; Strombergs having a stubby dashpot with the 'Zenith' name cast into it, while the SUs have a much taller dashpot without any markings.

ENGINE NUMBER	TAG NUMBER
Stromberg CD175	
Vehicles from 1970 to 1986;	
non-detoxed engines -	
*Please refer to the beginning of the **V8 Engine** section for information on 'Detoxed' or 'Non-detoxed'.*	
355 suffix C, D & E	3712
355 suffix F	
3550000F to 35542952F	3881
35542953F onwards	3915
13D & 18D	3915
detoxed engines -	
*Please refer to the beginning of the **V8 Engine** section for information on 'Detoxed' or 'Non-detoxed'.*	
341 & 359 -	
suffix A & B	3318
suffix C & D	3677
suffix E	3887
suffix F	3854
34183127F, 20D & 21D	3999
398	3881
11D,15D,16D, 17D & 19D	4104
Vehicles from 1986 onwards;	
non-detoxed engines -	
*Please refer to the beginning of the **V8 Engine** section for information on 'Detoxed' or 'Non-detoxed'.*	
28D & 29D	4185
detoxed engines -	
*Please refer to the beginning of the **V8 Engine** section for information on 'Detoxed' or 'Non-detoxed'.*	
26D & 27D	4187
30D	4186
SU HIF	
Vehicles from 1986 onwards;	
non-detoxed engines	
*Please refer to the beginning of the **V8 Engine** section or information on 'Detoxed' or 'Non-detoxed'.*	
28D & 29D	FZX2006
detoxed engines	
*Please refer to the beginning of the **V8 Engine** section for information on 'Detoxed' or 'Non-detoxed'.*	
26D, 27D & 30D	FZX2005

INTRODUCTION

TR8 - TR7 V8 Fuel Section

This section covers most applications for Rover V8 - including TR8 & TR7 V8 where relevent (since many parts for factory TR8's are no longer available). Please use this section to identify and select the parts you need by referring to the relevent sub-section, description & part numbers. Many owners will find this section useful as a reference especially if owning a converted TR7-V8 where parts have been transplanted from an SD1, Range Rover or similar.

Carbs

Though various other carbs have been used from time to time, by far the most common carburettors to be found supplying fuel to the Rover V8 are Zenith Stromberg CD175s and SUHIFs. Chosen for their combination of economy, low emissions and simplicity of operation (plus, of course, availability in large quantities), they are an excellent choice. Nevertheless, the SUHIF6 with manual choke, as fitted to SD1 3500 saloons from 1976 to 1981, is probably the most popular, due to the fact that it can be "tuned" to suit other engine upgrades.

Efi (Electronic Fuel Injection)

Electronic fuel injection first appeared on production Rover V8 engines as early as 1977, bound for the emissions-sensitive Australian market. Subsequently, it was fitted to TR8s and Rover SD1s sold in North America. However, these early systems were designed specifically to meet emissions requirements; it was the Rover SD1 Vitesse, introduced in 1982, that boasted the first efi system designed to increase power output. Vitesses produced 190bhp from a 3.5 litre engine which was otherwise largely similar to the carburettor version, producing 155bhp.
Three years later, in October 1985, the Range Rover V8 followed suit: efi replaced carbs for Vogue models initially, and for all V8 4-dr models from November 1986.

There are two basic types of efi system fitted to the Rover V8. Similar in operation, they both use solenoid injectors - one per cylinder - operating directly into the inlet ports. They both respond to information from sensors relating to temperature, throttle position and engine speed, but neither has any control over ignition. The differences between the systems are as follows:
The first system - Lucas L-Jetronic - uses an airflow meter, inside which is a hinged flap that measures, by deflection, the flow of air into the engine, thus varying the voltage signal to the ECU.
The second system - Range Rover/Discovery only, introduced to coincide with the 'new' 3.9 litre engine in 1988 but also fitted to some 3.5 litre engines - incorporates a 'hotwire' air metering system, which contains no moving parts. Instead, it employs two sensor wires - one of which is heated - to measure air mass as it passes over the wires and into the engine. A voltage signal is then sent to the ECU proportionate to the voltage required to maintain the temperature of the heated wire as it is cooled by the air flow.

The earlier type, which was fitted to the first 3.5 efi (non cat'-equipped) Range Rovers from 1986, is similar (though not identical) to the system fitted to the Rover SD1 Vitesse, the main difference being the ecu (electronic control unit). The hotwire type, fitted to later Range Rover 3.5, 3.9 & 4.2 vehicles (with or without cat's), despite appearing quite similar, shares few parts with the flap type system.

Twin plenum injection

Twin plenum, or twin-throttle plenum injection, was a variation of the Lucas-L system, produced for a short period in the mid 1980s. It was intended primarily for the Group A racing Vitesses being campaigned by BL Motorsport, but found its way onto a small number of production Rover Vitesses for homologation purposes. In road-car form, it is similar to the single-throttle type in every way except for the plenum chamber and associated air inlet trunking. Of the parts that are different, most are now unavailable.

Holley & Weber 4 barrel carbs

Finally, we supply two 4 barrel carburettor conversion kits for the Rover V8 engine (carb or efi, all engine sizes):
1. The legendary Holley 390cfm carburettor. The kit includes a 390cfm 4 barrel Holley carb, with vacuum secondaries and electric choke, an Offenhauser inlet manifold and choke cable kit, chrome plated pancake filter kit and full instructions.
2. The Weber 4-barrel carb kit. The kit includes a Weber 4 barrel 500cfm carb (bright finished), complete with Edelbrock Performer dual plane inlet manifold, chrome plated pancake air filter kit and all gaskets, cables and instructions for fitting. Ideal for on or off road, these replacement carbs both represent good value as performance upgrades. Use them on their own or, for maximum benefit, in conjunction with our Performance cylinder heads, uprated camshafts and stainless steel tubular manifolds. They work just as well (or better) with larger capacity engines and are the perfect solution for limited under-bonnet space, as with TR8 conversions.

K&N Filters

We also supply a range of K&N Air Filters for most applications including 4-Barrel pancakes. Refer to separate panel for details.

Inlet Manifold Fittings - V8 (Carbs) - *All applications*

All parts listed are suitable for saloon, sports and 4x4 applications unless otherwise stated.

Description	Qty Req.	Part No.
Inlet manifold - carburettor;		
SD1		
1976 - 1982, SU carbs	(1)	**ERC5484**
1982 on - Stromberg carbs		
all except engs 34A & 36A	(1)	**ERC5950**
engines 34A & 36A	(1)	**ERC9900**
TR8	(1)	**ERC5484**
Range Rover		
Please contact our sales department for price & availability of Range Rover inlet manifolds.		
Bolt - inlet manifold; *All engines.*		
3/8"UNC x 11/2"	(9)	**BH506121**
3/8"UNC x 2"	(3)	**BH506161**
Washer - manifold bolt	(12)	**2204**
Gasket - inlet manifold - all models;		
tin	(1)	**ERC3990**
composite	(1)	**ERR7306**
End seal - manifold gasket		
for tin gasket	(2)	**AJM645**
for composite gasket	(2)	**ERR7283**
Clamp - end seal	(2)	**ERR7282**
Screw - seal clamp	(2)	**602236**
Thermal transmitter *Located behind thermostat (when fitted).*	(1)	**545010**
Gasket - thermal transmitter	(1)	**236022**
Non-return valve - brake servo; *Not Range Rovers with ABS.*		
carb models	(1)	**ADU1402**
efi models	(1)	**RTC5907**
Washer - non-return valve	(1)	**232043**
Heater outlet - rear *Where fitted.*	(1)	**603440**
Gasket - rear heater outlet	(1)	**603441**
Temperature sender unit - coolant; *Located at front of inlet manifold - all engines.*		
carb models		
air con	(1)	**PRC6317**
non air con	(1)	**GTR108**
efi models		
3.5 litre -		
air con	(1)	**PRC6317**
non air con	(1)	**GTR108**
3.9 litre *With & without air-con.*	(1)	**PRC7918**
Washer - temperature sender unit	(1)	**90568054**
Thermostat *(Suitable for all engines)*;		
74°	(1)	**ETC4761**
82°	(1)	**GTS104**
88°	(1)	**GTS106**
Gasket - thermostat;		
Rover P6 type *With thermostat bypass in housing.*	(1)	**GTG116**
SD1/TR8	(1)	**GTG125**
Range Rover		
early engines *Pre 1976.*	(1)	**610387**
all other engines	(1)	**ERR2429**
Thermostat housing;		
saloon/sports		
standard type *Aluminium.*	(1)	**RB7211**
P6 type - steel *With integral bypass pipe. Suitable for Offenhauser or Edelbrock manifold. With integral by-pass pipe.*	(1)	**RB7322**
Range Rover		
without electric fan switch		
eng nos: 341, 355, 359 only	(1)	**RB7322**
all other models	(1)	**ERC2139**
with integral electric fan switch *For air con fans. Switch not included.*		
air con	(1)	**ETC6135**
non air con	(1)	**ETC4596**
Fan switch - thermostat housing *Range Rover.*	(1)	**PRC3505**
Washer - fan switch	(1)	**C457593**

TO ORDER: 01522 568000
www.rimmerbros.co.uk

Carburettors & Carb Components - TR8 & Rover SD1

Description	Qty Req.	Part No.
Carburettor;		
Where new units are unavailable, we can offer a reconditioning service - please enquire.		
SU HIF6 - SD1		
1976 - 1981		
rh	(1)	**FZX1316R**
lh	(1)	**FZX1316L**
1985 onwards		
rh	(1)	**FZX1456R**
lh	(1)	**FZX1456L**
Stromberg CD175		
SD1 1981 onwards		
rh	(1)	**ERC5991**
lh (with FASD unit)	(1)	**ETC4714**
TR8		
US federal spec		
- rh	(1)	**ERC2105**
- lh	(1)	**ERC2104**
US California spec		
- rh	(1)	**ERC3432**
- lh	(1)	**ERC3433**
Gasket - carb mounting;		
SUs	(4)	**ERR4381**
Strombergs	(4)	**ERR4381**
Insulating block - carbs	(2)	**ERC1102**

Carb components - SU HIF6 - 1976 to 1981

Chrome Dashpot Covers	(1)	**RB7658**
Lowered. Pairs.		
Damper Piston	(2)	**CUD2901A**
Piston spring	(2)	**AUD4398**
Metering needle *(Standard)*	(2)	**CUD1109**
Needle guide	(2)	**AUD4288**
Throttle spindle	(2)	**WZX1170**
Float needle & seat kit	(2)	**WZX1100**
Float		
rh	(1)	**WZX1509**
lh	(1)	**WZX1510**
Main jet		
rh	(1)	**WZX1453**
lh	(1)	**WZX1452**
Sealing Ring only (Lower)	(2)	**AUD3588A**
Gasket set	(2)	**WZX1505**
Seal kit	(2)	**RTC6072**

Carb components - SU HIF6 - 1985 on

Chrome Dashpot Covers	(1)	**RB7658**
Lowered. Pairs.		
Damper Piston	(2)	**CUD2901A**
Piston spring	(2)	**AUD4398**
Metering needle - BFW *(Standard)*	(2)	**NZX8069**
Needle guide	(2)	**AUD4288**
Float needle & seat kit	(2)	**WZX1097**
Float	(2)	**WZX1509**
Main jet	(2)	**WZX1453**
Sealing Ring only (Lower)	(2)	**AUD3588A**
Gasket Set	(2)	**WZX1505**
Seal kit	(2)	**RTC6072**

Carb components - Stromberg CD175

Damper Piston	(2)	**518432A**
Piston spring	(2)	**516946**
Metering needle (Standard) (TR8 only);		
USA Federal	(2)	**AAU7220**
USA California	(2)	**AAU7268**
Diaphragm	(2)	**JS499A**
Needle valve	(2)	**BHM1075**
Float & arm assembly	(2)	**605833**
Gasket set	(2)	**RTC1481A**
Service kit	(2)	**AAU7222**
Float	(2)	**WZX1509**
FASD Unit	(1)	**AEU2456**
Carb adjusting tool - Stromberg	(1)	**RX1222**
TR8 & SD1 only - not suitable for Land Rover applications.		

Carb Needles - Non Standard

For TR8/SD1 applications.

Richer needles. Use as required if fitting K&N filters and/or Tubular Exhaust manifolds.

Description	Qty Req.	Part No.
Carb Needles - Non Standard		
SU Applications		
BAF Needle	(2)	**CUD1105**
Standard exhaust manifold.		
BAC Needle	(2)	**CUD1102**
Tubular exhaust manifold.		
Stromberg Applications		
B1FB Needle	(2)	**RB7465**
Standard exhaust manifold.		
B1AW Needle	(2)	**RB7468**
Tubular exhaust manifold.		

Carburettor Components - Range Rover

Stromberg CD175 - 1970 to Oct 1985

Diaphragm - all models	(2)	**JS499A**
Spring - diaphragm	(2)	**606792**
Gasket kit;		
carbs 3712, 3915	(2)	**605857**
all other carbs	(2)	**RTC1481A**
Metering needle - non-detoxed vehicles;		
carbs:		
3712	(2)	**606793**
3881	(2)	**AAU8231**
3915	(2)	**AEU2462**
Metering needle - detoxed vehicles;		
Engine nos: 341, 359 - 8.13:1 CR.		
carbs:		
3318	(2)	**90608276**
3677 (BIDF)	(2)	**AAU1488**
3677 (BIFF)	(2)	**RTC4776**
3887	(2)	**AAU8229**
3854 (BIEJ)	(2)	**AAU8230**
3854 (BIFF)	(2)	**RTC4776**
3999 (BIFC)	(2)	**AEU1850**
4104	(2)	**AEU1851**
Needle valve;		
carbs:		
3712	(2)	**AAU4547**
3881 & 3915	(2)	**RTC1482**
3318	(2)	**AAU4547**
3677	(2)	**AAU4547**
3887 & 3854	(2)	**RTC1482**
3999	(2)	**RTC1482**
4104	(2)	**RTC1482**
Float (all models)	(2)	**605833**
Throttle disc;		
carbs:		
3712, 3881 & 3915	(2)	**605800**
3318	(2)	**597770**
3677, 3887, 3854 & 3999	(2)	**AAU1489**
4104	(2)	**AEU1848**
Temperature compensator - detoxed engines;		
carbs:		
3318, 3677, 3887 & 3854	(2)	**90608271**
3999 & 4104	(2)	**AAU7900**
Damper & oil cap - all models	(2)	**518432**
Cold start assembly;		
carbs:		
3712 & 3915	(1)	**606810**
3318 & 3677	(1)	**608282**
Vacuum switch	(1)	**614361**
Detoxed engines.		
Fuel trap	(1)	**ERC2042L**
Detoxed engines.		

Stromberg CD175 - 1986 onwards

Diaphragm	(2)	**JS499A**
Spring - diaphragm	(2)	**606792**
Gasket kit	(2)	**RTC1481**
Service kit	(2)	**AAU2967**
Kit includes: needle valve, diaphragm, float gasket and seals.		
Metering needle;		
carbs:		
4186	(2)	**AEU1851**
4187		
to VIN 162496	(2)	**AEU1851**
VIN 162497onwards	(2)	**RTC4774**
4185	(2)	**AEU1850**
Needle valve	(2)	**RTC1482**
Float	(2)	**605833**
Temperature compensator	(2)	**AAU7900**
Throttle disc	(2)	**AEU1848**
Damper & oil cap	(2)	**518432**
Fuel trap	(2)	**ERC2042L**

SU HIF from 1986

Engine numbers with a 'C' suffix.

Seal kit	(2)	**RTC6072**
Gasket kit	(2)	**WZX1505**
Metering needle;		
carbs:		
FZX2005	(2)	**NZX8077**
FZX2006	(2)	**NZX8076**
Jet assembly;		
rh	(1)	**CUD2785**
lh	(1)	**CUD2788**
Needle guide	(2)	**AUD4288**
Float needle & seat kit	(2)	**STC205**
Float;		
rh	(1)	**LZX1600**
lh	(1)	**RTC3566**
Piston spring	(2)	**AUD4398**
Damper & oil cap	(2)	**LZX1505**
Fuel trap	(2)	**ERC2042**

Carb Mountings - Range Rover;

Stromberg and SU carbs.

gasket - carb to manifold	(6)	**ERR4381**
insulating block		
carbs - 3712, 3881 & 3915	(2)	**ERC1102A**
all other carbs	(2)	**ERR4383**
gasket - carb to elbow	(2)	**612435**
'O' ring - elbow to cleaner	(2)	**602634**

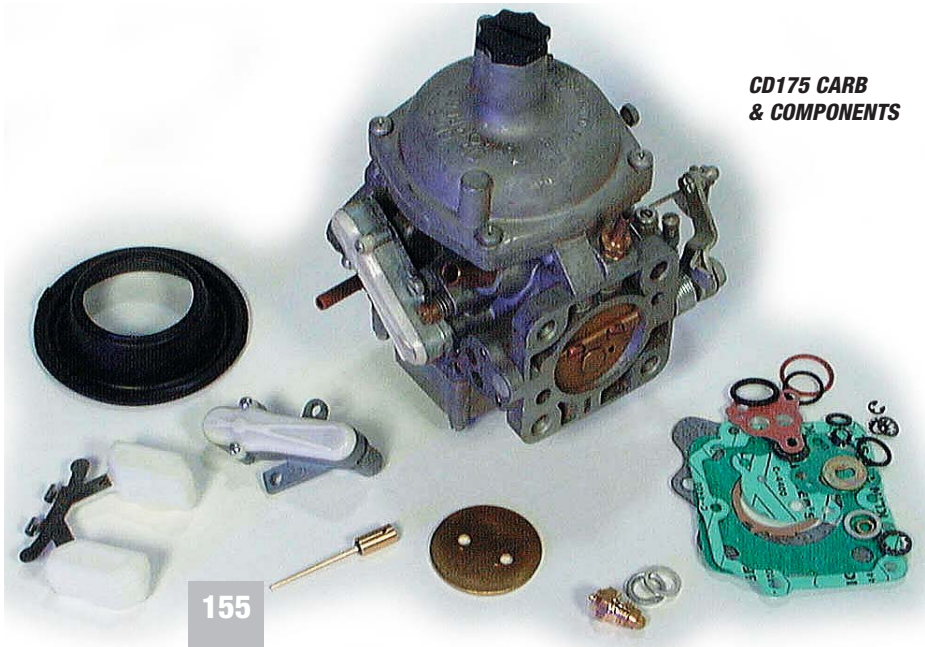

CD175 CARB & COMPONENTS

Description	Qty Req.	Part No.

4 Barrel Carb Components

Carburettor only		
Weber 500	(1)	**RA1335**
Holley 390	(1)	**RB7254**
Jets - 390 carb (pair)	(1)	**RB7254J**
Overhaul kit - Holley 390 carb	(1)	**RB7254H**
Holley Stud/Nut/Washer Set	(1)	**RB7254S**
Gasket *(Carb to manifold) (Holley & Weber)*	(1)	**RB7181**
Inlet manifold - 4 barrel carb *Suitable for Weber & Holley carbs*		
Offenhauser 360° *Dual Plane. Lowest bonnet clearance.*	(1)	**RB7314**
Offenhauser/JWR *(Dual Port)*	(1)	**RA1336**
Edelbrock performer *Dual Plane. High Torque.*	(1)	**RA1337**
Gasket - inlet manifold;		
tin	(1)	**ERC3990**
composite	(1)	**ERR7306**
End seal - manifold gasket		
for tin gasket	(2)	**AJM645**
for composite gasket	(2)	**ERR7283**
Water Pipe - inlet manifold *Rear of manifold to heater.*	(1)	**CX2774**
Gasket for above	(1)	**CX2784**
Thermostat housing;		
cast iron	(1)	**RB7322**
Gasket - thermostat housing	(1)	**GTG116**
Accelerator cable kit *(Holley/Weber)*	(1)	**RB7278**
Manual choke conversion kit *(Holley)*	(1)	**RB7184**
Auto choke conversion kit *(Weber)*	(1)	**RA1323ACH**
Manual choke cable *(Holley)*	(1)	**RB7290**
Spacer - carb to pancake filter *Allows clearance on Weber/Edelbrock linkage.*	(1)	**BY9340**

Air cleaner base to flame trap/breather.

4 Barrel Carb Conversion Kits

Suitable for all engine sizes.
Complete conversion kits for all V8 engines.
Kits include: 4 barrel carb, inlet manifold, chromed 14" air cleaner (can be substituted with K&N air cleaner at extra cost), thermostat housing and accelerator cable kit.
See also fuel pump section for details of our Facet type electric fuel pump, which may be required in addition to the 4 barrel carb kits, depending on application.

HOLLEY - OFFENHAUSER CARB KIT

Holley/Offenhauser conversion;
390cfm Holley carb with auto choke, Offenhauser manifold, air cleaner, thermostat housing & accelerator cable kit.

Kit 1 *With 3" deep air cleaner.*	(1)	**RB7262**
Kit 2 *With 2" deep air cleaner for extra bonnet clearance.*	(1)	**RB7262L**

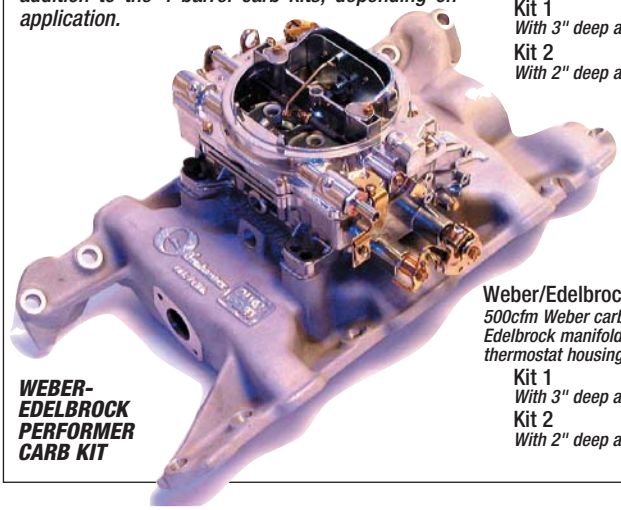

WEBER-EDELBROCK PERFORMER CARB KIT

Weber/Edelbrock Performer conversion;
500cfm Weber carb with manual choke, Edelbrock manifold, air cleaner, thermostat housing & accelerator cable kit.

Kit 1 *With 3" deep air cleaner.*	(1)	**RA1323**
Kit 2 *With 2" deep air cleaner for extra bonnet clearance.*	(1)	**RA1323L**

PANCAKE AIR CLEANERS FOR HOLLEY OR WEBER CARBS

4 Barrel Air Cleaners

Air cleaner kit; *14" diameter chromed 'pancake' type, complete with filter, suitable for Weber & Holley. See also K&N filter assys.*		
standard - 3" deep	(1)	**RB7438**
'low-rider' - 2" deep *For extra bonnet clearance.*	(1)	**RB7439**
Replacement element - air cleaner;		
standard element		
3" deep	(1)	**RB7438EL**
2" deep	(1)	**RB7439EL**
K&N element		
3" deep	(1)	**RB7438ELK**
2" deep	(1)	**RB7439ELK**
Adaptor - breather pipe	(1)	**RB7654**

K&N 4 Barrel Air Cleaners

See following pages for other K&N applications.

K&N Filter - Holley & Weber 4 barrel carbs
Pancake (14") filter assembly, bolts directly on to carb. May also be fitted with 'X-stream' filter top (lid).

recessed type (assembly) *Sits low on carb for extra bonnet clearance. N.B. for use with manual choke only.*	**RA1397**
flat type (assembly) *2¼" deep, fits either manual or automatic choke.*	**RA1398**
'X-stream' air flow (lid only) *For maximum air flow. Replaces standard pancake K&N lid. Available in black, blue, red or polished. N.B. K&N filter assembly (recessed or flat type) must be purchased separately.*	**RA1399**

HELP US TO HELP YOU

If you are not sure which part/part number you require, to ensure you receive the correct component, wherever possible please quote;
MODEL, YEAR, CHASSIS AND/OR ENGINE NUMBER PLUS ANY COMPONENT INFORMATION.

TO ORDER: 01522 568000
www.rimmerbros.co.uk

ELECTRONIC FUEL INJECTION

Inlet Manifold Fittings - Airflow Meter efi (3.5 litre)

All parts listed are suitable for most TR8 efi, Rover SD1 Vitesse, VDP efi and Range Rover/Discovery 3.5 efi unless otherwise stated.

Description	Qty Req.	Part No.
Inlet manifold - 3.5 efi *SD1 Vitesse & VDP efi.* *Please contact our sales department for price & availability of inlet manifolds for Range Rover efi.*	(1)	**ERC9194**
Bolt - inlet manifold *(all engines)*;		
3/8"UNC x 11/2"	(9)	**BH506121**
3/8"UNC x 2"	(3)	**BH506161**
Washer - manifold bolt	(12)	**2204**
Gasket - inlet manifold - all models;		
tin	(1)	**ERC3990**
composite	(1)	**ERR7306**
End seal - manifold gasket		
for tin gasket	(2)	**AJM645**
for composite gasket	(2)	**ERR7283**
Clamp - end seal	(2)	**602076**
Screw - seal clamp	(2)	**602236**
Auxiliary air valve	(1)	**ERC3617A**
Thermotime switch	(1)	**EAC1385**
Temperature sensor *Next to thermotime switch.*	(1)	**ETC8496A**
Sealing washer *(Temp sensor)*	(1)	**243967**
Injector	(8)	**ERC3620A**
O-Ring seal - injector;		
large (upper)	(8)	**EAC2414A**
small (lower)	(8)	**EAC2415A**
Fuel pressure regulator;		
standard		
SD1/TR8/Range Rover	(1)	**ERR268**
adjustable *Recommended for performance applications. Increases fuel pressure, according to inlet manifold demand, by a greater ratio than standard item.*	(1)	**EAC1284UR**
Uprated fuel pump resistor *Use in conjunction with adjustable pressure regulator.* *Enables fuel pump to cope with extra fuel demand.*	(1)	**DRC3017HP**
Fuel rail;		
right hand	(1)	**ERC3735A**
left hand	(1)	**ERC3734A**
Fuel hose (8cm length) *High pressure efi hose to join fuel rails.*	(2)	**TKC6351**
Fuel hose - cold start injector *Also suitable for pressure regulator.*	(1)	**ETC7241A**
Clamp - efi hoses	(a/r)	**C435996**
Overrun fuel cut-off switch	(1)	**ETC6143**

Thermostat

Description	Qty Req.	Part No.
Thermostat; *Suitable for all engines.*		
74°	(1)	**ETC4761**
82°	(1)	**GTS104**
88°	(1)	**GTS106**
Gasket - thermostat;		
SD1/TR8	(1)	**GTG125**
Range Rover	(1)	**ERR2429**
Thermostat housing;		
saloon/sports *Aluminium.*	(1)	**RB7211**
Range Rover		
without electric fan switch		
eng nos: 341, 355, 359 only	(1)	**RB7322**
all other models	(1)	**ERC2139**
with integral electric fan switch *For air con fans. Switch not included.*		
air con	(1)	**ETC6135**
non air con	(1)	**ETC4596**
Fan switch - thermostat housing *Range Rover.*	(1)	**PRC3505**
Washer - fan switch	(1)	**C457593**
Temperature transmitter	(1)	**GTR138**
Non-return valve - brake servo	(1)	**ETC6143**

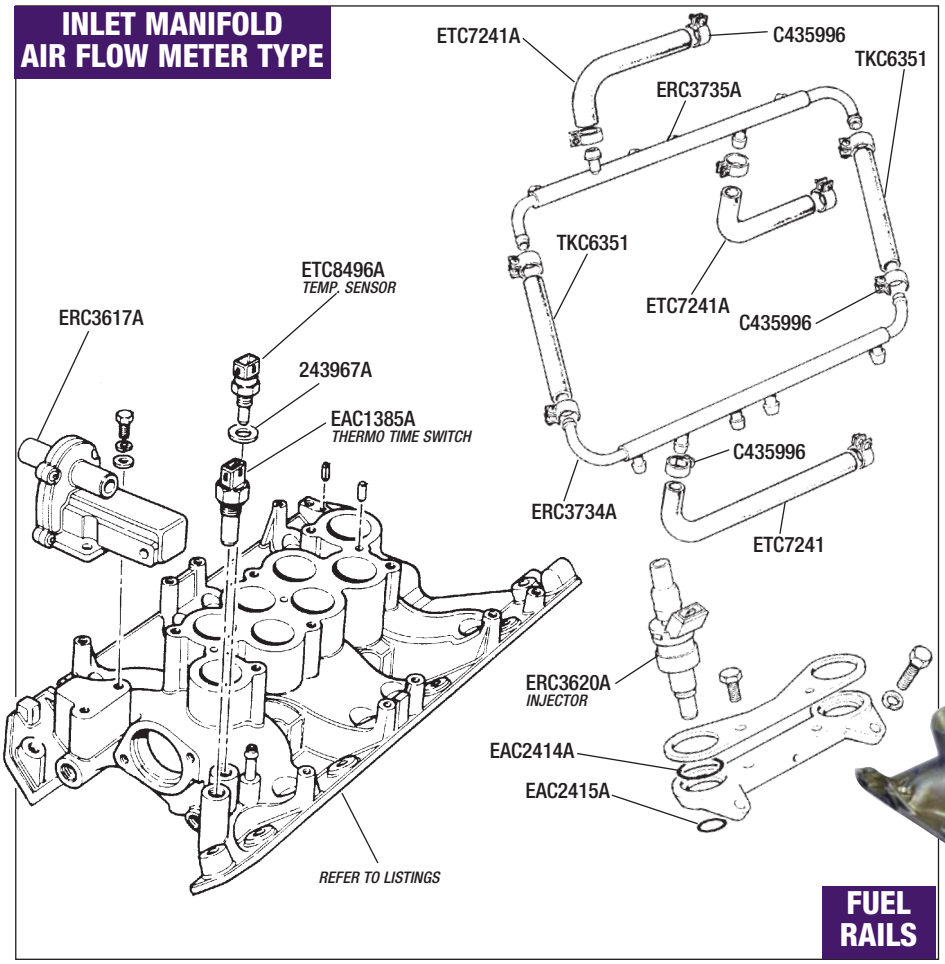

Efi Upgrade Kit

*For larger capacity (4.6 litre and above) Performance engines using the original fuel injection system, considerable gains in torque and horsepower are attainable by fitting an **Efi Upgrade Kit**. Kits are available for both Flap-type and Hotwire efi systems and comprise a ported and enlarged inlet manifold (inlet tracts opened out to 45mm diameter), trumpet base with enlarged (45mm diameter) intake trumpets and plenum chamber with enlarged (72mm diameter) throttle body. These components help to remove the restriction in air flow, which can strangle your engine's power potential.*
Efi Upgrade Kits are sold on an exchange basis.
See also our Re-mapped & Re-chipped ECUs.

Description	Qty Req.	Part No.
Efi upgrade kit;		
flap-type efi	(1)	**RB7691**
hotwire efi	(1)	**RB7692**

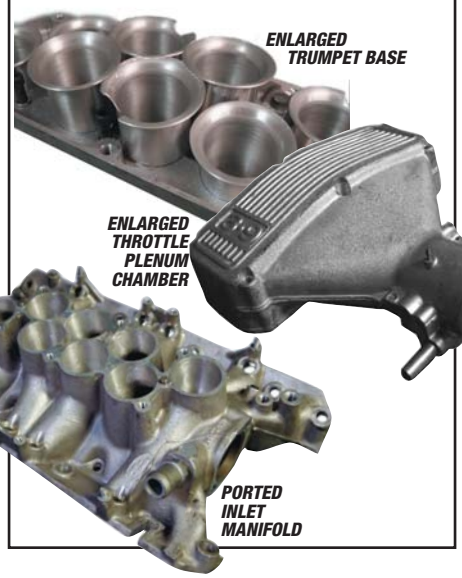

Inlet Manifold Fittings - Hotwire efi (3.5, 3.9 & 4.2)

Parts listed are suitable only for Range Rover/Discovery (plus other vehicles - such as TVR etc - fitted with Land Rover engines) equipped with hotwire efi systems, unless otherwise stated. Items not illustrated.

Description	Qty Req.	Part No.
Inlet manifold - 3.9 efi *Please contact our sales department for price & availability of 3.9 hotwire inlet manifolds.*		
Bolt - inlet manifold *(all engines)*;		
3/8"UNC x 1 1/2"	(9)	**BH506121**
3/8"UNC x 2"	(3)	**BH506161**
Washer - manifold bolt	(12)	**2204**
Gasket - inlet manifold - all models;		
tin	(1)	**ERC3990**
composite	(1)	**ERR7306**
End seal - manifold gasket		
for tin gasket	(2)	**AJM645**
for composite gasket	(2)	**ERR7283**
Clamp - end seal	(2)	**602076**
Screw - seal clamp	(2)	**602236**
Temperature sensor	(1)	**ETC8496A**
Sealing washer *(Temp sensor)*	(1)	**243967A**
Injector;		
3.5	(8)	**ETC6264**
3.9 & 4.2	(8)	**ERR722**
O-Ring - injector	(16)	**RTC5679**
Clip - injector	(8)	**ETC6375**
Fuel pressure regulator *3.5, 3.9 & 4.2*	(1)	**ETC8494**
Fuel temperature sensor *Front of fuel rail.*	(1)	**ETC6661**

Plenum Chamber Components / Airflow Meter & Hotwire - efi

Please contact our Sales Department for price & availability of plenum chambers.

Description	Qty Req.	Part No.
Screw - hex key type; *Plenum Chamber to Ram Housing.*		
single plenum	(6)	**SS108801**
twin plenum		
short	(4)	**SS108801**
long	(2)	**ETC6057A**
Throttle disc;		
SD1		
single plenum	(1)	**ERC9112A**
twin plenum	(2)	**ERC9112A**
Range Rover		
engine nos. 22D & 23D *Low compression.*	(1)	**ETC5772**
all other engine nos	(1)	**ERC9112A**
Throttle spindle;		
SD1		
single plenum	(1)	**ERC9113**
twin plenum		
front	(1)	**ETC6013A**
rear	(1)	**ETC6014A**
Range Rover		
engine nos. 22D & 23D *Low compression.*	(1)	**ETC5771**
all other engines	(1)	**ERC9113**
Bush - throttle spindle *Single plenum only.*	(2)	**611795**
Seal - throttle spindle;		
single plenum	(2)	**AUD3577**
twin plenum	(4)	**AUD3577**
Idle speed screw;		
all engines to July 1987	(1)	**ERC7809**
all engines July 1987 on	(1)	**ST606080**
Throttle potentiometer;		
SD1	(1)	**ETC4483**
Range Rover		
3.5 litre	(1)	**ETC5598**
31D engine nos only *3.5 litre hotwire type.*	(1)	**ETC6443**
3.9 & 4.2 litre	(1)	**ETC8495**
Gasket - potentiometer	(1)	**ERR4944**
Cold start injector *Airflow meter type efi only*	(1)	**EAC1383**
Gasket - cold start injector	(1)	**ERC3795**
Idler control assembly *Range Rover.*	(1)	**ETC6214**
Stepper motor *Range Rover.*	(1)	**ETC6660**
Gasket - stepper motor	(1)	**ERR2926**
Overrun valve	(1)	**ERC9786**
Gasket - overrun valve	(1)	**C44190**
Air-valve solenoid *Air con models*	(1)	**ERC7536A**
Breather Hose *Flame trap to plenum.*	(1)	**ERC9116A**
Hose - extra air valve to plenum *C-shaped hose*	(1)	**ERC9117**
Non return valve - servo	(1)	**RTC5907**
Pneumatic actuator *Cruise control.*	(1)	**ETC7150**

PLENUM CHAMBER

AIR FLOW METER TYPE

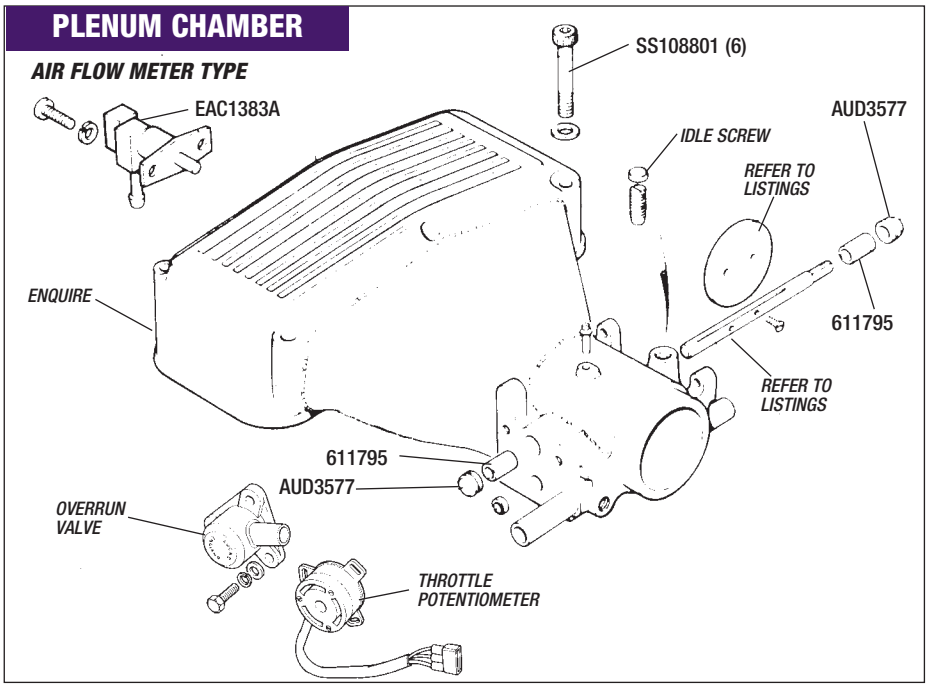

Cables

Description	Qty Req.	Part No.
Accelerator cable;		
SD1 V8		
1976 - 1980	(1)	**CRC481**
1981 on	(1)	**NAM6865**
TR8	(1)	**UKC6482**
Range Rover V8		
carb - rhd		
4-sp manual	(1)	**566426**
5-sp manual	(1)	**NRC8388**
automatic	(1)	**NTC3083**
carb - lhd		
manual	(1)	**577356**
automatic	(1)	**NTC3084**
efi - to 1989 (VIN FA)		
rhd - all models	(1)	**NTC1054**
lhd - 3.5	(1)	**NTC4842**
- 3.9	(1)	**NTC6723**
efi - 1990 (VIN GA) on		
rhd (3.9 & 4.2)	(1)	**ANR5328**
lhd - 3.5	(1)	**NTC7198**
- 3.9 & 4.2	(1)	**ANR5327**
Holley carb	(1)	**RB7278**
Choke cable;		
SD1 V8 - early models	(1)	**CRC516**
TR8	(1)	**TKC6742**
Range Rover V8		
Stromberg carbs		
rhd	(1)	**NRC9094**
lhd	(1)	**NRC9095**
SU carbs (rhd & lhd)	(1)	**NTC3690**
Holley carb	(1)	**RB7290**

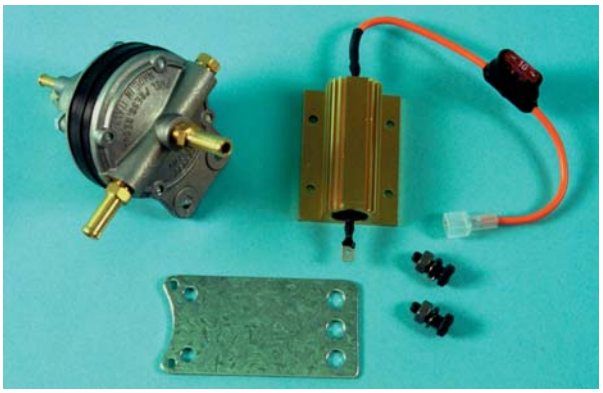

HIGH PERFORMANCE PRESSURE REGULATOR AND PUMP RESISTOR

Electronic Components - efi

ECU - new

Please contact our sales department for availability & price of new ECUs.

ECU - reconditioned/recalibrated/re-chipped;

We can recondition your existing Lucas 4CU (flap-type) or 14CUX (hotwire type) ECU to original specification.
Alternatively, our fuel injection expert can recalibrate both types of ecu for more power and economy, on either standard or modified engines. For instance, re-chipping a hotwire ecu can give your 3.9 an extra 20bhp with no other modifications; driveability and cruise economy are similarly improved. Or, if you are considering a large capacity engine for your fuel injected car, a recalibrated ecu will provide the correct fuelling essential for the engine, giving you full power with no loss of fuel economy.
Please contact our sales department to discuss your requirements.
All ECUs are guaranteed for 1 year.

Description	Qty Req.	Part No.
Diode pack (relay) *(Red)*	(1)	**DAC1861**
Relay - fuel pump *(Aluminium)*		
non catalyst vehicles	(1)	**AGU1068**
catalyst vehicles	(1)	**AFU2913L**
Tune resistor - hotwire;		
red	(1)	**PRC8005**
yellow	(1)	**PRC8007**
white	(1)	**PRC8009**
green	(1)	**PRC8172**
blue	(1)	**AMR2016**
Airflow meter;		
flap type	(1)	**ERC9127A**
hotwire type	(1)	**ESR1057**
Air intake hose;		
SD1		
air cleaner to a/flow meter *Single & twin plenum.*	(1)	**ERC9197**
a/flow meter to plenum chamber		
single plenum	(1)	**ERC9129**
twin plenum		
- long	(1)	**ETC6009A**
- short	(1)	**ETC6008A**
Range Rover		
air cleaner to a/flow meter *Flap type only.*	(1)	**NRC9996**
a/flow meter to plenum chamber		
flap type	(1)	**NRC9997**
hotwire type -		
- to 1994 (VIN LA)	(1)	**ESR1611L**
- 1995 (VIN MA) onwards	(1)	**ESR1807**
Hose clip;		
air cleaner to a/flow meter *Flap type.*	(2)	**RTC3518**
a/flow meter to chamber *All models.*	(2)	**CN100908**
Y-adaptor - air intake hose *Twin plenum only.*	(1)	**ETC6003A**
Power resistor	(1)	**DAC1211A**

TO ORDER: 01522 568000
www.rimmerbros.co.uk

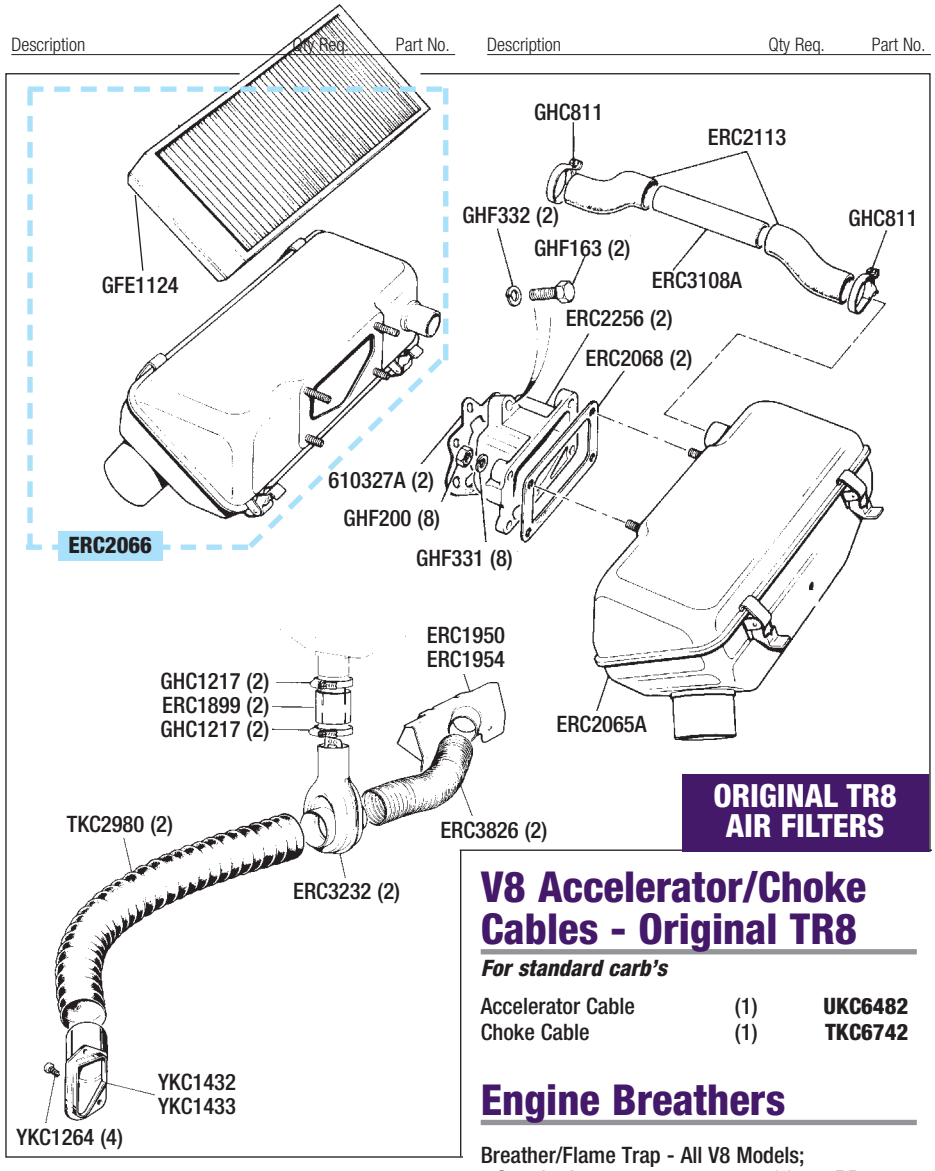

ORIGINAL TR8 AIR FILTERS

V8 Air Cleaners - Original TR8

*See also; **K&N Filters and Holley Carb Conversion/K&N Filters.***

Description	Qty Req.	Part No.
Air Cleaner Box;		
Rh	(1)	ERC2066
Lh	(1)	ERC2065A
Air Filter	(2)	GFE1124
Adaptor-Air Intake Box *Air box assembly to carb.*	(2)	ERC2256
Gasket *(Air box to adaptor)*	(2)	ERC2068
Gasket *(Adaptor to carb)*	(2)	610327A
Nut *(Air box to adaptor)*	(8)	GHF200
Washer *(Air box to adaptor)*	(8)	GHF331
Setscrew *(Air box adaptor)*	(2)	GHF163
Washer-Spring *(For GHF163)*	(2)	GHF332
Air Balance Tube	(1)	ERC3108A
Hose-Connecting	(2)	ERC2113
Hose Clip	(2)	GHC811
Heat Shield *(Exh manifold);*		
Rh	(1)	ERC1954
Lh	(1)	ERC1950
Stud *(Shield to exh manifold)*	(4)	ERC2019
Washer *(For ERC2019)*	(4)	RTC613A
Nut *(For ERC2019)*	(4)	GHF201
Flexible Hose	(2)	ERC3826
Air Temperature Control Unit	(2)	ERC3232
Sleeve	(2)	ERC1899
Clip	(4)	GHC1217
Flexible Hose	(2)	TKC2980
Air Intake Moulding*		
Rh	(1)	YKC1433
Lh	(1)	YKC1432
Screw **Locates to Inner Flitch.*	(4)	YKC1264
Flame Trap	(1)	603330A

V8 Accelerator/Choke Cables - Original TR8

For standard carb's

Description	Qty Req.	Part No.
Accelerator Cable	(1)	UKC6482
Choke Cable	(1)	TKC6742

Engine Breathers

Description	Qty Req.	Part No.
Breather/Flame Trap - All V8 Models;		
Standard	(1)	RB7432
Short Type *(½ Standard Height)*	(1)	RB7432LOW
Chromed *(Will not fit original Rocker Covers)*	(1)	RB7432C
Powder Coated (Black)	(1)	RB7432PC BLACK
Powder Coated (Red)	(1)	RB7432PC RED
Breather Filter - V8 Carb Models *Rear of LH Rocker Cover*	(1)	GFE7004
Breather Filter Element (foam)- V8 EFi Models *Rear of LH Rocker Cover*	(1)	ERC3209A
Plastic Cap for Above	(1)	ERC3208A
Mounting Plate for Filter	(1)	ERC3933

Carb Breather Pipes

3500 - '76-'86-SU

Description	Qty Req.	Part No.
Breather Pipe Kit (inc items*)	(1)	RO1142
'Y' - Piece*	(1)	ERC882A
Hose - 'Y' to RH Carb*	(1)	ERC879
Hose - 'Y' to LH Carb*	(1)	ERC880
Hose - 'Y' to Crankcase Vent*	(1)	ERC881
Breather Filter	(1)	GFE7004
Hose - Short R/Cover to Filter	(1)	154212
Hose - Long Filter to Air Box	(1)	ERC298A

3500 - '82-'85 Stromberg

Description	Qty Req.	Part No.
Breather Pipe Kit (inc items*)	(1)	RO1143
'Y' - Piece*	(1)	156605
Hose - 'Y' to RH Carb*	(1)	UAM8068
Hose - 'Y' to LH Carb*	(1)	UAM8067
Hose - 'Y' to Crankcase Vent*	(1)	ERC881
Breather Filter	(1)	GFE7004
Hose - Short R/Cover to Filter	(1)	154212
Hose - Long Filter to Air Box	(1)	ERC298A

3500 '82 on - SU

Description	Qty Req.	Part No.
Breather Pipe Kit (inc items*)	(1)	RO1144
'Y' - Piece*	(1)	ERC882A
Hose - 'Y' to RH Carb*	(1)	ERC8716
Hose - 'Y' to LH Carb*	(1)	ETC4727
Hose - 'Y' to Crankcase Vent*	(1)	ERC881
Breather Filter	(1)	GFE7004
Hose - Short R/Cover to Filter	(1)	154212
Hose - Long Filter to Air Box	(1)	ERC298A

V8 EFi - Breather/ Plenum Hoses

Description	Qty Req.	Part No.
Hose - Breather Flame Trap to Plenum (Long)	(1)	ERC9116
Hose - Steel Pipe to Decel Valve	(1)	ERC4468
Hose - Steel Pipe to Plenum	(1)	ERC9115
Hose - Steel Pipe to Aux Air Valve	(1)	ERC9118
Hose - Aux Air Valve to Plenum (C-Shaped)	(1)	ERC9117
Hose - Steel Pipe to Solenoid/Valve	(1)	ERC7508
Air Valve - Solenoid Operated	(1)	ERC7536
Hose - Solenoid/Valve to Housing	(1)	ERC9218

Description | Qty Req. | Part No.

V8 Air Filters - Standard
All Applications

Air filter - carburettor;

SD1		
cylindrical air box	(2)	**GFE1068**
oval air box	(2)	**GFE1117**
TR8 - original	(2)	**GFE1124**
Range Rover		
all except Australia	(2)	**605191**
Australia only	(2)	**GFE1124**
Seal - air filter *Range Rover, except Australia.*	(4)	**RTC5888**

Air filter - efi;

SD1 *Except North America.*	(1)	**GFE1104**
TR8/SD1 North America	(1)	**GFE1093**
Range Rover		
to 1994 (VIN LA)	(1)	**RTC4683**
1995 (VIN MA) onwards	(1)	**ESR1445**

V8 Air Filters - K&N
All Applications

For 4-Barrel filter see page 156.
K&N offer superior filtration, an improvement in air flow and many times longer life than standard elements. In addition, they can be cleaned and re-used.
Available for both carburettor and efi petrol models, they replace the original air intake box and paper element and require no alterations to the fuel system on a standard engine (with standard exhaust).
K&N Filters are proven in both competition and off-road environments.

Air filter - K&N;

carb vehicles *Stromberg & SU.*	(2)	**RB7296**
efi vehicles -		
flap type *Length 170mm, flange ID 73mm Clamps to air flow meter.*	(1)	**RA1063**
hotwire type *Length 180mm, flange ID 85mm Clamps to air flow meter.*	(1)	**RA1060**
Carb Needles - TR8/SD1; *Richer needles. Use as required if fitting K&N filters and/or Tubular Exhaust manifolds.*		
SU Applications		
BAF Needle *Standard exhaust manifold.*	(2)	**CUD1105**
BAC Needle *Tubular exhaust manifold.*	(2)	**CUD1102**
Stromberg Applications		
B1FB Needle *Standard exhaust manifold.*	(2)	**RB7465**
B1AW Needle *Tubular exhaust manifold.*	(2)	**RB7468**
Cleaning fluid (1 litre) *For cleaning filter element.*	(a/r)	**RX1346**
Element oil *(For re-oiling element);*		
1 fl oz sachet	(a/r)	**RX1347**
250ml bottle	(a/r)	**RX1348**
400ml aerosol	(a/r)	**RX1349**

Description | Qty Req. | Part No.

V8 Fuel Pump
All Applications

Rover SD1 and original TR8 carb vehicles both have in-tank fuel pumps, which deliver approximately 4.5psi pressure (ie. usually sufficient for a Holley or Weber carb but inadequate for efi).

Rover SD1 efi vehicles have a high pressure fuel pump (delivering around 40psi), mounted very close to, but outside, the base of the fuel tank.

Early, non power steering, V8 engines have a mechanical fuel pump bolted to the timing cover and driven by a lobe on the camshaft spacer.

Power steering equipped cars usually have an electric fuel pump (due to the location of the p.a.s. pump where the fuel pump had previously been).

Early pas-equipped Range Rovers have an electric pump in the engine bay.

From 1986, the fuel pump for both carb and efi Range Rovers is fitted inside the fuel tank. However, the two types are not interchangeable, as the efi pump is a high pressure type not suitable for carb vehicles.

Up to approximately 1991, the in-tank fuel pump is separate from the fuel level sender. From 1991 onwards, the pump and sender unit are combined.

We also stock non standard electric fuel pumps, designed to fit in the engine bay. The 'Universal' pump is suitable for all carb engines (excluding 4-barrel). The Facet pump is suitable as a replacement for any carb vehicle, including Weber or Holley-equipped, it delivers 4-5psi pressure. It is not suitable for efi. See below for listings. These pumps are ideal for TR8 conversions.

CARB ENGINES

Fuel pump - carb;		
SD1 *In-tank type.*	(1)	**DRC195**
TR8 *In-tank type.*	(1)	**TKC3410**
Range Rover		
1970-1986 - in engine bay		
mechanical	(1)	**RTC6724**
electric *Horizontal or vertical.*	(1)	**PRC390**
1986 on - in tank	(1)	**PRC702**
Fuel pump - carb (non standard)		
'universal' fit *Remote mounted electric pump suitable for most carb engine applications. Complete with banjo fittings.*	(1)	**RB749**
uprated (carb type) *Facet competition high capacity electric pump (remote mounted). Complete with unions. Suitable for all carb engines (including Holley/Weber conversions).*	(1)	**RB725**
Gasket - mechanical pump *Pump to timing cover.*	(1)	**602180PA**
Gasket - electric pump;		
for TKC3410	(1)	**ARA1502**
for PRC3901	(1)	**90606261**
for PRC7020	(1)	**ESR3278**
Mounting bobbin - fuel pump *For PRC3901 pump.*	(2)	**NRC7135**
Nut - for mounting bobbin	(4)	**GHF200**
Earthing braid	(1)	**568244**
Filter - electric pump *For PRC3901 pump.*	(1)	**90606262**

Description | Qty Req. | Part No.

ELECTRIC FUEL PUMP (CARBS) STANDARD (UNIVERSAL) - RB7496

Efi ENGINES

Fuel pump - efi;		
TR8/SD1 - under-floor		
standard	(1)	**AUU1649**
performance	(1)	**AUU1649A**
Range Rover - in-tank		
To VIN HA464553 (1991) *Separate sender type.*	(1)	**PRC8318**
VIN HA464554 to KA642682 *Combined pump/sender type.*	(1)	**PRC9409**
VIN KA642683 (1993) onwards *Combined pump/sender type.*	(1)	**ESR3926**
Gasket - efi fuel pump; *Pump to tank.*		
TR8/SD1	(1)	**ARA1502**
Range Rover		
separate pump/sender	(1)	**ESR3278**
combined pump/sender	(1)	**NTC5859**
Locking ring - pump/sender;		
TR8/SD1	(1)	**ARA1501**
Range Rover	(1)	**NTC5858**
Suppressor - fuel pump *Range Rover*	(1)	**PRC7491**
Fuel pump resistor;		
standard	(1)	**DRC3017**
performance *Use with rising rate fuel pressure regulator.*	(1)	**DRC3017HP**

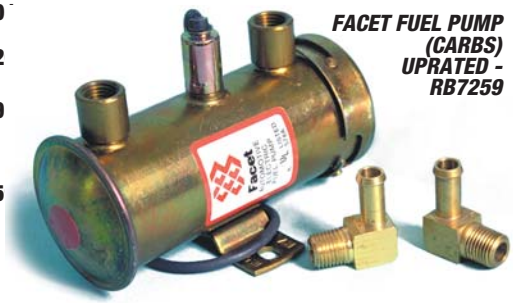

FACET FUEL PUMP (CARBS) UPRATED - RB7259

V8 Fuel Filter
All Applications

Fuel filter assembly- carb vehicles;		
SD1/TR8	(1)	**GFE7004**
Range Rover		
to approx' 1986	(1)	**90577508**
approx' 1986 onwards	(1)	**NRC9786**
Element & seal - filter *All carb Range Rovers.*	(1)	**JS660L**
Seal - bowl retaining bolt; *All carb Range Rovers.*		
outer	(1)	**606207**
inner	(1)	**AEU1147**
Fuel filter - efi vehicles;		
SD1/TR8 *Charcoal canister.*	(1)	**GFE7001**
Range Rover		
to 1990 (VIN GA) *Push-on connector type.*	(1)	**GFE7001**
1991 (VIN HA) onwards *Screw-on connector type.*	(1)	**ESR4065**
'O'-ring - pipe to filter *Range Rovers from 1992 onwards.*	(2)	**ESR259**

TO ORDER: 01522 568000
www.rimmerbros.co.uk

Description Qty Req. Part No.

V8 Exhaust Systems

Designed to fit

All our exhausts in this section are manufactured from stainless steel, and are designed to fit correctly when the original TR8 specification subframe is used (which acts as a datum for engine/transmission position). Please Note: to enable correct fitting of manifolds and exhaust system, ensure engine mountings/brackets fit behind (and not in front of) subframe support brackets. If a modified TR7 subframe is fitted then you will only overcome fitting/clearance problems by modifying the exhaust system.

Which system?

Twin exit? Single exit? Standard manifolds? Tubular manifolds? The choice is yours!

To achieve maximum performance from any engine modifications you may have carried out, it is recommended that the exhaust system is selected accordingly. Along with silencer requirements - quiet or noisy! The following pages show the options available.

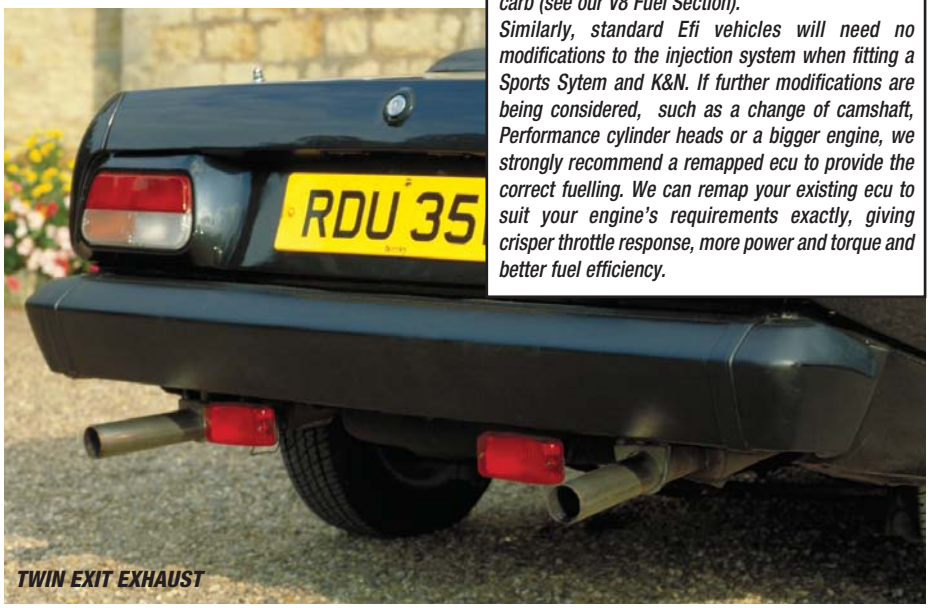

TWIN EXIT EXHAUST

SINGLE EXIT EXHAUST

Description Qty Req. Part No.

ENHANCEMENTS FOR SPORTS EXHAUST

Our Sports Exhaust Systems are designed to give an increase in power & torque on an otherwise unmodified vehicle. The way this is achieved is by helping the engine to 'breathe out' more efficiently. Naturally, it works just as well (or even better) on modified engines, since most modifications are designed to make the engine breathe more efficiently.

Fitting K&N air filters at the same time as one of our Sports Systems will help the engine to 'breathe in' more efficiently - by removing the restrictive standard air filter - yielding even better results. (For K&N filters, see our V8 Fuel Section).

To gain maximum benefit from our Sports Systems, particularly in large capacity V8s (3.9 or even 4.6 litre versions), fit our Big Valve Performance cylinder heads. These heads are ported and gas-flowed to help the engine achieve optimum efficiency. (For Performance cylinder heads, refer to our V8 Engine Section).

Finally, don't forget your fuel system: all this extra efficiency will be lost if your carbs are worn out or your injection system is not up to scratch! The original carbs should be adequate for an otherwise unmodified 3.5 engine fitted with a Sports System and K&N filters (provided they are correctly set up). For the same vehicle fitted with modified cylinder heads or a bigger engine, however, we would recommend fitting either a Holley or Weber 4 barrel carb (see our V8 Fuel Section).

Similarly, standard Efi vehicles will need no modifications to the injection system when fitting a Sports Sytem and K&N. If further modifications are being considered, such as a change of camshaft, Performance cylinder heads or a bigger engine, we strongly recommend a remapped ecu to provide the correct fuelling. We can remap your existing ecu to suit your engine's requirements exactly, giving crisper throttle response, more power and torque and better fuel efficiency.

Description Qty Req. Part No.

V8 EXHAUST SYSTEMS *YOUR CHOICE!*

Description	Qty Req.	Part No.

ORIGINAL TR8 CAST IRON MANIFOLDS

Cast Iron Manifolds & Fittings

Description	Qty Req.	Part No.

TR8 ORIGINAL CAST IRON MANIFOLDS

Cast Iron Manifold	(2)	**ERC2901**
Please refer to Price Guide for current availability.		
Gasket *(Manifold to head)*	(8)	**AJM692**
Setscrew *(Manifold to head)*	(16)	**GHF165**
Lock Plate *(For setscrew)*	(8)	**90613659**
Stud *(Manifold to down pipe)*	(6)	**TE108051**
Nut *(Manifold to down pipe)*	(6)	**GHF213**
Gasket *(Manifold to down pipe)*	(2)	**GEG745**

SD1 TYPE CAST IRON MANIFOLDS

Although not recommended for the TR8 conversion, it is possible to fit the SD1 type manifolds (using the downpipes listed over the page), to couple to one of our TR8 twin outlet exhaust systems. However, clearance problems usually necessitates modification of the down pipes and/or bulkhead. We recommend Tubular Extractor manifolds for easy installation.

Cast Iron Manifold		
Rh	(1)	**ERC428**
Lh	(1)	**ERC4754**
Gasket *(Manifold to head)*	(8)	**AJM692**
Setscrew *(Manifold to head)*	(16)	**GHF165**
Lock Plate *(For setscrew)*	(8)	**90613659A**
Stud *(Manifold to down pipe)*	(6)	**TE108051**
Nut *(Manifold to down pipe)*	(6)	**GHF213**
Gasket *(Manifold to down pipe)*	(4)	**ERC273A**

Exhaust System Fittings

*See also: **Fitting Kits.***

Description	Qty Req.	Part No.
Downpipe Bracket;		
Manual	(1)	**UKC4472**
Auto	(1)	**UKC4473**
Exhaust Clamp	(5)	**GEX9008**
Hanging Bracket		
Rh	(1)	**YKC2119**
Lh	(1)	**YKC957**
Setscrew	(8)	**SH108201**
Washer-Spring	(8)	**GHF382**
Washer-Flat	(8)	**GHF301**
Mounting Ring *(Rubber)*	(4)	**GEX7487**
Rebound Rubber	(2)	**GEX7479**
Support Bracket	(2)	**UKC2404**
Setscrew	(4)	**SH108161**
Nut	(4)	**GHF213**
Washer-Spring	(4)	**GHF382**
Rear Strap-Upper	(2)	**UKC5048**
Mounting Ring *(Rubber)*	(4)	**GEX7487**
Rear Strap-Lower	(2)	**UKC2274**
Nut	(4)	**GHF213**
Washer-Spring	(4)	**GHF382**
Jointing Compound	(4)	**GCH112**

TR8 ORIGINAL CAST IRON MANIFOLD

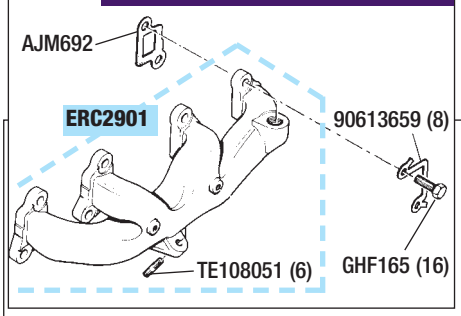

V8 EXHAUST FITTINGS

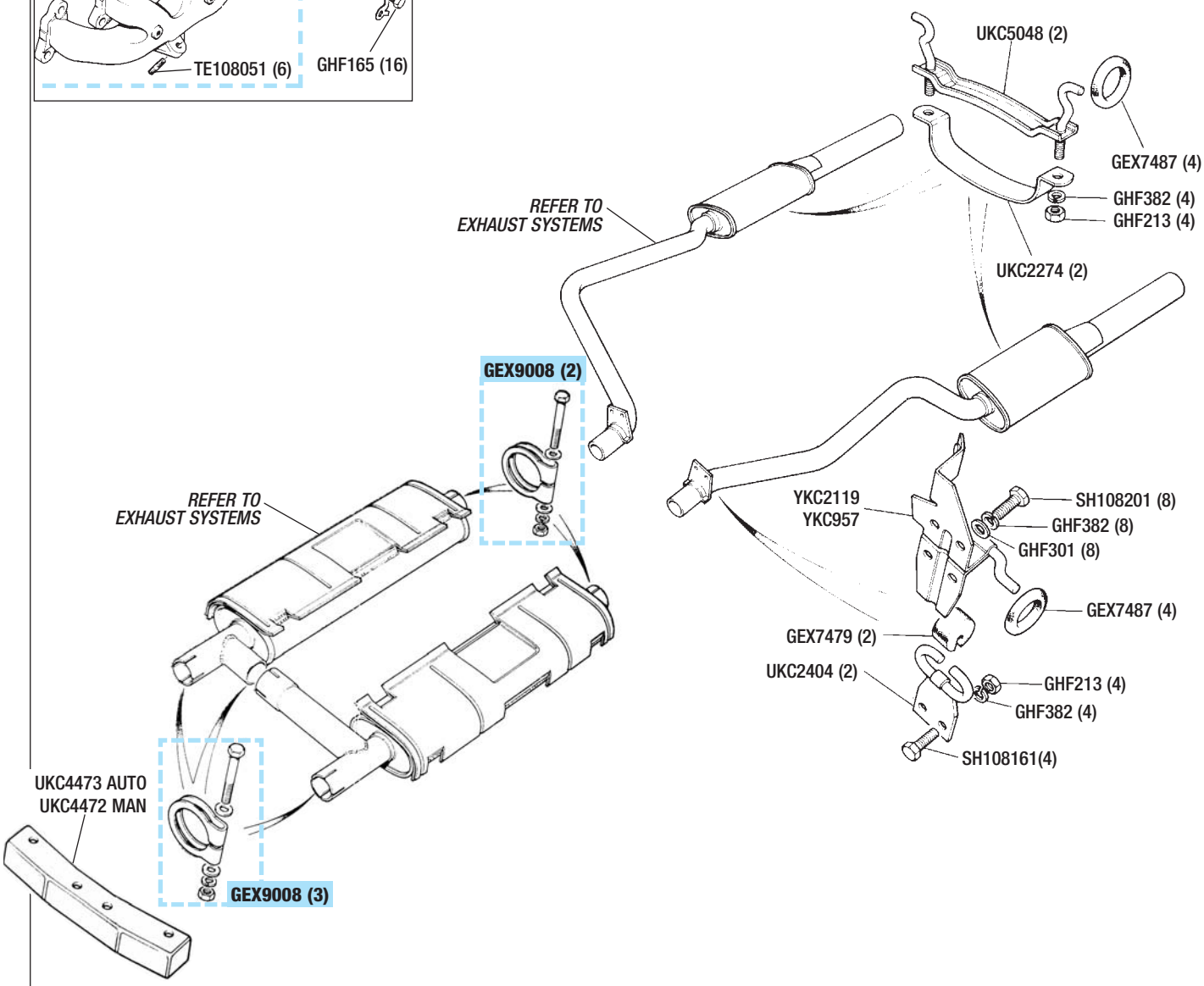

TO ORDER: 01522 568000
www.rimmerbros.co.uk

Description Qty Req. Part No.

TR8 - ORIG. MANIFOLDS EXHAUST SYSTEMS (S/S)
STANDARD - TWIN

The following systems are a direct replacement for the standard (non catalyst) original (twin) TR8 exhaust which uses original TR8 cast iron manifolds. Available in stainless steel only ('Lifetime' Guarantee). *See also: **'Sport Exhausts'.***

TR8 - ORIGINAL MANIFOLDS- QUIET

Full System (4-Box)	(1)	**RB7294**

Includes downpipes, centre silencers & tailpipes. Excludes fitting kit. Offers refined and subtle exhaust note.

Individual components:

Downpipe		
Rh	(1)	**RB7493**
Lh	(1)	**RB7494**
Centre Silencer		
Rh	(1)	**GEX3680SS**
Lh	(1)	**GEX3681SS**
Tailpipe & Silencer		
Rh	(1)	**GEX3683SS**
Lh	(1)	**GEX3684SS**
Fitting Kit	(1)	**RB7294FK**

Includes rear mounting brackets, assembly fittings and jointing compound.

TR8 - ORIGINAL MANIFOLDS - NOISY

Full System - 'H'-Pipe (2-Box)	(1)	**RB7301**

Identical to standard system except for an 'H'-Pipe that replaces the centre silencers for a more noisy exhaust. Includes downpipes, H-pipe & tailpipes. Excludes fitting kit.

Individual components:

Downpipe		
Rh	(1)	**RB7493**
Lh	(1)	**RB7494**
Centre 'H'-Pipe	(1)	**RB7297**
Tailpipe & Silencer		
Rh	(1)	**GEX3683SS**
Lh	(1)	**GEX3684SS**
Fitting Kit	(1)	**RB7301FK**

Includes rear mounting brackets, assembly fittings and jointing compound.

Description Qty Req. Part No.

TR8 - SD1 MANIFOLDS EXHAUST SYSTEMS (S/S)
STANDARD - TWIN

The following systems can be used when utilising the cast iron manifolds from the SD1. We can not guarantee that the system will be a straight forward fit since many converted TR7 V8's that have SD1 manifolds may have been fitted with a non standard subframe and/or mounted with the engine lower in the engine bay. Customers should be aware of this when purchasing such a system and be prepared to modify/adapt to suit. Available in stainless steel only ('Lifetime' Guarantee). *See also: **'Sport Exhausts'.***

TR8 - SD1 MANIFOLDS - QUIET

Full System (4-Box)	(1)	**RB7703**

Includes 2 - twin downpipes, link pipes, centre silencers & tailpipes. Excludes fitting kit. Offers refined and subtle exhaust note.

Individual components:

Downpipe		
Rh	(1)	**RB7339**
Lh	(1)	**RB7340**
Link Pipe (Rh/Lh)	(2)	**RB7495**
Centre Silencer		
Rh	(1)	**GEX3680SS**
Lh	(1)	**GEX3681SS**
Tailpipe & Silencer		
Rh	(1)	**GEX3683SS**
Lh	(1)	**GEX3684SS**
Fitting Kit	(1)	**RB7703FK**

Includes rear mounting brackets, assembly fittings and jointing compound.

TR8 - SD1 MANIFOLDS - NOISY

Full System - 'H'-Pipe (2-Box)	(1)	**RB7704**

Identical to system listed above except for an 'H'-Pipe that replaces the centre silencers for a more noisy exhaust. Includes 2 - twin downpipes, link pipes, H-Pipe & tailpipes. Excludes fitting kit.

Individual components:

Downpipe		
Rh	(1)	**RB7339**
Lh	(1)	**RB7340**
Link Pipe (Rh/Lh)	(2)	**RB7495**
Centre 'H'-Pipe	(1)	**RB7297**
Tailpipe & Silencer		
Rh	(1)	**GEX3683SS**
Lh	(1)	**GEX3684SS**
Fitting Kit	(1)	**RB7704FK**

Includes rear mounting brackets, assembly fittings and jointing compound.

Description Qty Req. Part No.

TR8 - PART SYSTEMS (S/S)
TWIN EXIT

The following systems are ideal if downpipes or manifolds are not needed and a replacement is required for the standard orginal (twin) TR8 exhaust. Supplied as either a 'Quiet' (4-box) or 'Noisy' (2-Box) system. They can also be coupled to a pair of tubular manifolds using link pipes RB7495. Available in stainless steel only ('Lifetime' Guarantee).

TR8 - PART SYSTEM - QUIET

Part System (4-Box)	(1)	**RB7312**

Includes: centre silencers & tailpipes. Excludes fitting kit.

Fitting Kit	(1)	**RB7312FK**

Includes rear mounting brackets, assembly fittings and jointing compound.

TR8 - PART SYSTEM - NOISY

Part System - 'H'-Pipe (2-Box)	(1)	**RB7303**

Includes: H-Pipe & tailpipes. Excludes fitting kit.

Fitting Kit	(1)	**RB7303FK**

Includes rear mounting brackets, assembly fittings and jointing compound.

Description Qty Req. Part No.

TR8 - SPORTS EXHAUST SYSTEMS (S/S) PERFORMANCE - TWIN

The following systems are supplied with a pair of tubular manifolds to extract more power from the V8. Coupled (using link pipes) to the original (twin) TR8 exhaust system. Available in stainless steel only ('Lifetime' Guarantee).

Note: *The manifolds and systems listed are designed to fit correctly when the original spec TR8 subframe is used (which acts as a datum for engine position), note that engine mountings should fit behind subframe brackets. If a modified TR7 subframe is fitted then you will only overcome fitting/clearance problems by modifying the exhaust system.*

TR8 - PERFORMANCE - TWIN EXIT - QUIET

Full System (4-Box) (1) **RB7269**
Includes; pair tubular manifolds (fits Rhd & Lhd), link pipes, centre silencers & tailpipes, excludes fitting kit.
Offers performance with refined & subtle exhaust note.

Individual components:

Manifold (pair)	(1)	**RB7030SS**
Link Pipe (Rh/Lh)	(2)	**RB7495**
Centre Silencer		
Rh	(1)	**GEX3680SS**
Lh	(1)	**GEX3681SS**
Tailpipe & Silencer		
Rh	(1)	**GEX3683SS**
Lh	(1)	**GEX3684SS**
Fitting Kit	(1)	**RB7269FK**

Includes manifold gaskets, rear mounting brackets, assembly fittings and jointing compound.

TR8 - PERFORMANCE - TWIN EXIT - NOISY

Full System - 'H'-Pipe (2-Box)(1) **RB7264**
Identical to system listed above except for an 'H'-Pipe that replaces the centre silencers for a more noisy exhaust. Includes tubular manifolds (fits Rhd & Lhd), link pipes, H-pipe & tailpipes. Excludes fitting kit.

Individual components:

Manifold (pair)	(1)	**RB7030SS**
Link Pipe (Rh/Lh)	(2)	**RB7495**
Centre 'H'-Pipe	(1)	**RB7297**
Tailpipe & Silencer		
Rh	(1)	**GEX3683SS**
Lh	(1)	**GEX3684SS**
Fitting Kit	(1)	**RB7264FK**

Includes manifold gaskets, rear mounting brackets, assembly fittings and jointing compound.

Description Qty Req. Part No.

TR8 - SPORTS EXHAUST SYSTEM (S/S) PERFORMANCE - SINGLE EXIT - LARGE BORE

The following system is supplied with a pair of tubular manifolds to extract more power from the V8. Coupled to a large bore rally type exhaust system (2 1/4" bore) with single exit straight through silencer and 3" dia tailpipe, this system is very noisy - pure V8!. Available in stainless steel only ('Lifetime' Guarantee).

Note: *The manifolds and systems listed are designed to fit correctly when the original spec TR8 subframe is used (which acts as a datum for engine position), note that engine mountings should fit behind subframe brackets. If a modified TR7 subframe is fitted then you will only overcome fitting/clearance problems by modifying the exhaust system.*

TR8 - PERFORMANCE - SINGLE EXIT - NOISY

Full System - Large Bore (1) **RB7279**
Includes: pair tubular manifolds (fits Rhd & Lhd), 'Y' pipe, axle pipe and straight through rear silencer (3" tailpipe).
Excludes fitting kit.
Offers performance with race/rally type exhaust note.

Individual components:

Manifold (pair)	(1)	**RB7030SS**
Y-Pipe (A)	(1)	**TH801**
Y-Pipe (B)	(1)	**TH802**
Axle Pipe	(1)	**TH803**
Tailpipe & Silencer	(1)	**TH804**
Fitting Kit	(1)	**RB7279FK**

Includes manifold gaskets, assembly fittings and jointing compound.

TR8 - PART SYSTEM SINGLE EXIT - LARGE BORE

The following system is designed to be fitted to a pair of tubular manifolds. This large bore rally type exhaust system with single exit straight through silencer and 3" dia tailpipe is very noisy - pure V8! Available in stainless steel only ('Lifetime' Guarantee).

Note: *This system will fit directly on to Rimmer Bros tubular manifolds (when using original spec TR8 subframe). Modification may be required for other applications.*

TR8 - PART SYSTEM - SINGLE EXIT - L/BORE

Part System - Large Bore (1) **RB7317**
Less manifolds. Includes: 'Y' pipe, axle pipe and straight through rear silencer (3" tailpipe). Excludes fitting kit.

Fitting Kit (1) **RB7317FK**
Includes manifold gaskets, assembly fittings and jointing compound.

Description Qty Req. Part No.

TR8 - SPORTS TUBULAR MANIFOLDS (S/S) & COMPONENTS

Fitting a pair of tubular manifolds allows the engine to 'breathe', by extracting the exhaust gasses more efficiently. Noticeable improvements in power and mid-range torque can be expected - especially when combined with Thermo-Tec manifold insulation wrap and a pair of K&N filters. Please refer also to the various exhaust systems listed which include these manifolds. Manifolds fit both RHD and LHD vehicles.

Note: *The manifolds listed are designed to fit correctly when the original spec TR8 subframe is used (which acts as a datum for engine position), note that engine mountings should fit behind subframe brackets. If a modified TR7 subframe is fitted then you will only overcome fitting/clearance problems by modifying the manifolds.*

TR8 SPORTS TUBULAR MANIFOLDS (S/S)

Tubular Manifolds (pair) (1) **RB7030SS**
Fits both Rhd & Lhd vehicles.

Link Pipe (Rh/Lh) (2) **RB7495**
If coupling to twin exhaust system.

COOL IT Thermo-Tec

EXHAUST INSULATING WRAP

Thermo-Tec exhaust insulating wrap reduces under bonnet temperatures by as much as 70%, this increases air intake and exhaust gas velocity which adds performance. Retaining the heat in the exhaust protects you from mechanical burns and it will also help to prevent under bonnet fires. Any electrical components which are close to the manifold will be less prone to heat failure, increasing their life and performance. As an added benefit, under bonnet noise is also reduced! Thermo-Tec contains no asbestos or carcinogens.
The Snap Strap Installation Kit secures Thermo-Tec exhaust insulation wrap to your tubular manifold/s. A stainless steel high temperature material designed better than hose clamps and is easier to use.
Also recommended is Hy-cote paint. This preserves and protects the exhaust wrap after installation. Extra resins and binders seal the pores, toughen the surface and help extend the life of the wrap.

Insulation Wrap *(2" x 50' roll)*	(2)	**RX1382**
Snap - Strap Kit	(1)	**RX1383**
Hy-cote Paint, Aerosol *(400ml)*	(1)	**RX1432**

Manifold Fitting Kit (1) **EF1001**
Replaces original manifold bolts with studs to enable easier installation of manifolds. Inc. 16 studs, nuts & washers.

Gasket - Manifold to head (4) **AJM692S**
Twin port gasket.

Jointing Compound (1) **GCH112**

TO ORDER: 01522 568000
www.rimmerbros.co.uk

TR8 Transmission Details

In this TR8 Transmission & Axles section, apart from listing parts/components that relate solely to the TR8, we have also listed a 5 speed (heavy duty) gearbox, and rear axle units, that you may wish to consider fitting when converting your TR7 to TR8, especially if you are fitting or have fitted an uprated or large capacity engine.

V8 Gearbox - 5 Speed (Heavy duty)

Although you can re-use your existing TR7 5sp gearbox in the TR8 conversion, we offer a Heavy Duty V8 5sp gearbox which is a more robust unit to cope with the power increase. Please refer to main TR7 5 speed gearbox section for all gearbox internals, gear selector shafts & gearchange not listed here.

Description	Qty Req.	Part No.
Gearbox-Heavy Duty (5 Sp) *Recon. Supplied Less bellhousing, speedo pinion & gearchange remote assembly.*	(1)	**UKC9076RHD**
Gearbox Mounting (TR8) *Original TR8 Spec, harder than standard.*	(1)	**TKC2642**
Gear Oil (ATF) *(0.5 Litre)*	(a/r)	**GGL175**
Gear Oil (ATF) *(5 Litre)* *Gearbox capacity - 1.5 Litre.*	(a/r)	**GGL505**

V8 MANUAL GEARBOX ASSEMBLY *5 SPEED*

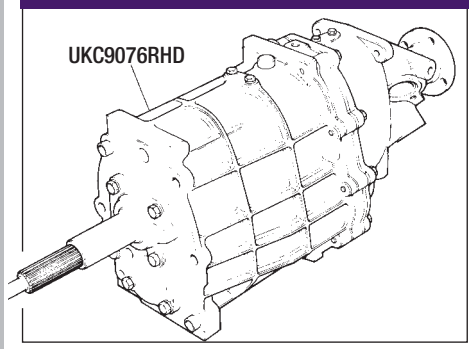

V8 Clutch Housing & Operation

Description	Qty Req.	Part No.
V8 Bellhousing	(1)	**FRC133**
Bolt Kit *Bellhousing to Block/Gearbox. Includes all bolts, nuts, washers marked '+' and '*.'*	(1)	**RB7130**
Bolt+ *(2" long)*	(6)	**BH505161**
Bolt+ *(2.75" long)*	(2)	**BH506221**
Washer-Spring+ *+Bellhousing to cyl' block.*	(8)	**GHF333**
Setscrew*	(4)	**SH112301**
Washer-Spring*	(4)	**WL112001**
Bolt*	(2)	**BH112091**
Washer-Spring*	(2)	**WL112001**
Washer-Flat*	(2)	**WA112081**
Bolt*	(2)	**GHF135**
Washer-*Flat	(2)	**WC110061**
Dowel* **Bellhousing to gearbox.*	(2)	**UKC25**
Clutch Operating Lever *(TR7/TR8)*	(1)	**LBU1234**
'Slipper' Pad (TR7/TR8)	(2)	**159003**
Clip (TR7/TR8) *Clutch arm to slave cyl push rod.*	(1)	**UKC1806**
Fulcrum Pin/Bolt *TR8 spec, use if converting TR7 5sp gearbox.*	(1)	**UKC13**
Dirt Shield-Lower	(1)	**FRC142**
Setscrew	(4)	**SH106161**
Washer	(4)	**WL106001**
Setscrew	(2)	**SH505051**
Washer	(2)	**GHF332**
Clutch Release Bearing•	(1)	**GRB209**
Carrier-Release Bearing• *•For original Non self centering type clutch.*	(1)	**FRC5368A**
Clutch Release Bearing & Sleeve■ *■For self centering type clutch only.*	(1)	**GRB90247**

V8 Speedo Cable & Drive

Please refer to main TR7 5 speed gearbox section for speedo drive housings/seals not listed here.

Description	Qty Req.	Part No.
Speedo Cable;		
Converted TR7 *Vehicles to 1981/VIN 402026.*	(1)	**GSD287**
Converted TR7 *Vehicles from 1981/VIN 402027.*	(1)	**GSD388**
Original TR8 *(LHD only)*	(1)	**GSD333**
Speedo Worm Drive Gear;		
Manual - 5 speed *Located on mainshaft, colour code Black.*	(1)	**TKC1274**
Automatic - BW66	(1)	**AEU1515**
Speedo Drive Pinion;		
Manual Gearbox *(22 teeth)*	(1)	**219003**
Manual Gearbox *(Optional - 21 teeth)*	(1)	**219002A**
Automatic Gearbox *(20 teeth)*	(1)	**219001**
Automatic Gearbox *(21 teeth)*	(1)	**219002A**
'O' Ring/Seal	(1)	**TRS1620**
Housing/Bearing *(Speedo drive pinion)*	(1)	**22G1486**
Oil Seal *(Speedo drive pinion)*	(1)	**NKC105A**
Retaining Plate	(1)	**22G1711**
Setscrew *(for 22G1711)*	(1)	**SH106201**
Washer-Spring	(1)	**GHF331**
Washer-Plain	(1)	**GHF300**

V8 SPEEDO CABLE & DRIVE

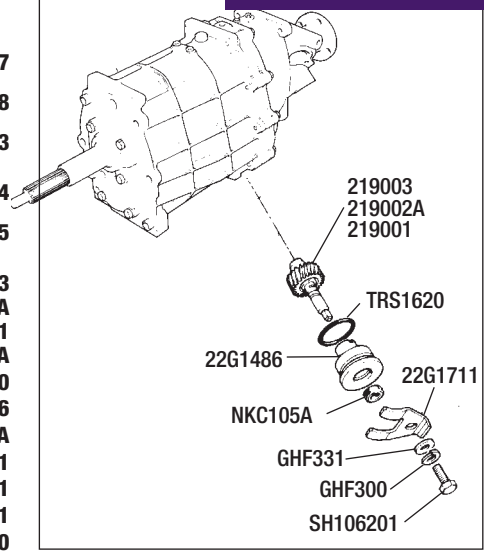

V8 CLUTCH HOUSING/ OPERATION

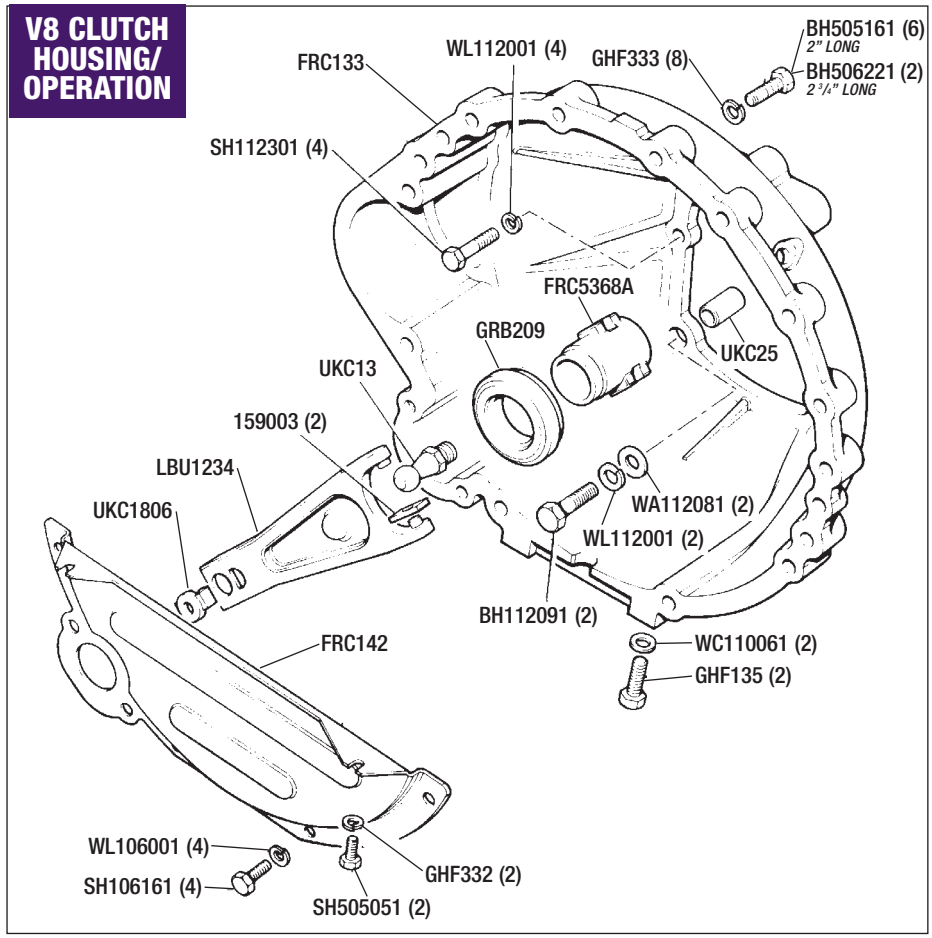

V8 Propshaft & Fittings

Description	Qty Req.	Part No.
Propshaft (TR8)	(1)	**RKC2890**
Original TR8 spec, manual & automatic. Designed to be used with our original TR8 front subframe, which denotes engine/gearbox position relative to rear axle.		
Bolt	(8)	**FRC90**
Nut	(8)	**GHF233**
Bump Stop *(Propshaft)*	(1)	**UKC8268**
Spacer	(2)	**UKC8413**
Washer	(2)	**WC105001**
Nut	(2)	**NY105041**

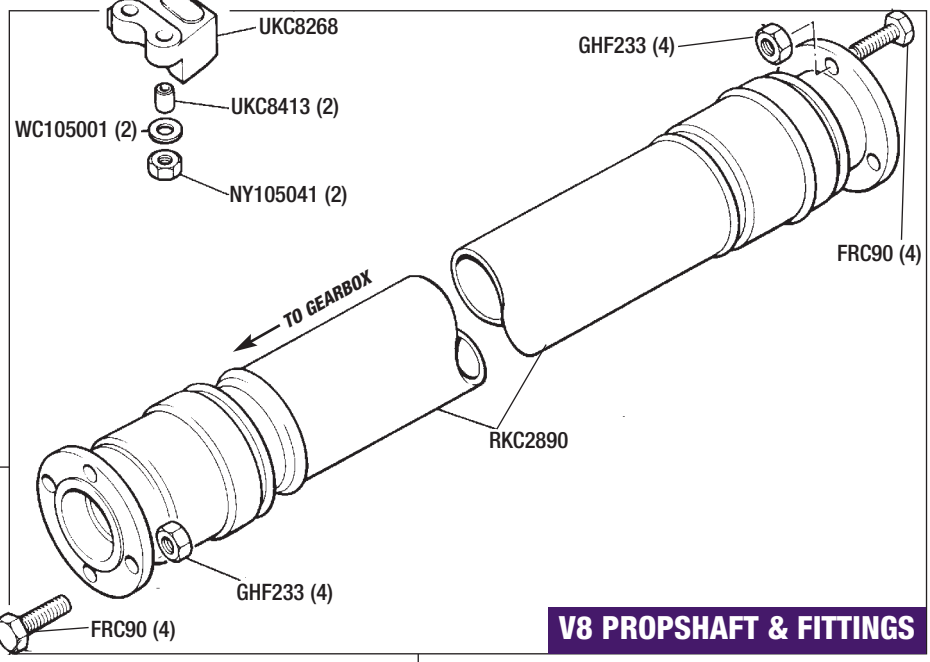

V8 PROPSHAFT & FITTINGS

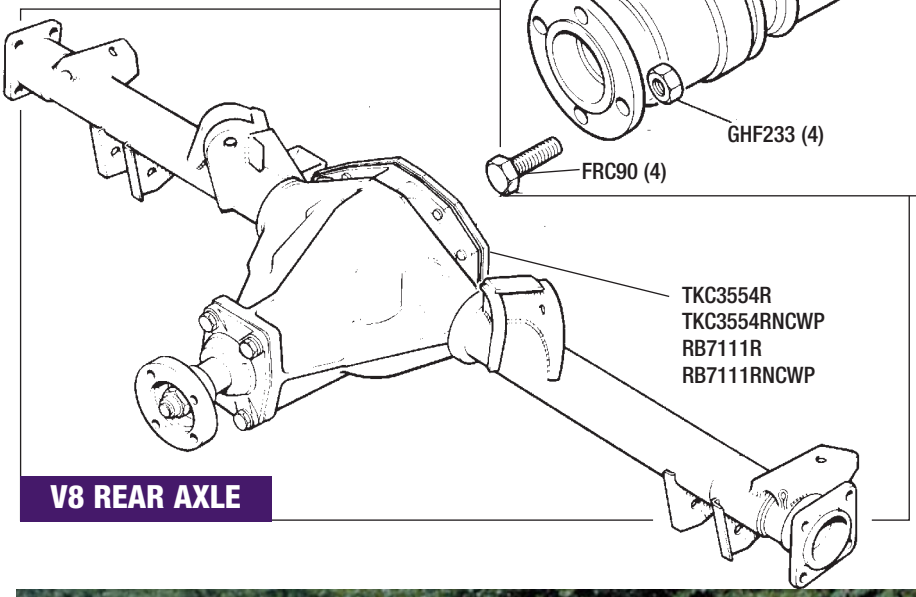

V8 REAR AXLE

V8 Rear Axle

Although you can re-use your existing TR7 5 speed rear axle in the TR8 conversion, we recommend fitting the TR8 axle (3.08:1 ratio), which will give you a more suitably geared vehicle.

Please refer to main TR7 Rear Axle (5 speed) section for rear axle/differential components.

Rear Axle ***(Standard Differential)***;
Reconditioned, less half shafts.

3.08:1 Ratio	(1)	**TKC3554R**
3.08:1 Ratio*	(1)	**TKC3554RNCWP**

**Fitted with new crown wheel & pinion.*

Rear Axle & LSD ***(Limited Slip Differential);***
Recondioned, less halfshafts.
Fitted with new Limited Slip Differential.

3.08:1 Ratio *(with LSD)*	(1)	**RB7111R**
3.08:1 Ratio* *(with LSD)*	(1)	**RB7111RNCWP**

**Fitted with new crown wheel & pinion.*

Unipart EP90 Gear Oil *(0.5 litre)* (a/r) **GGL190**
Rear axle capacity - 1.1 Litre.

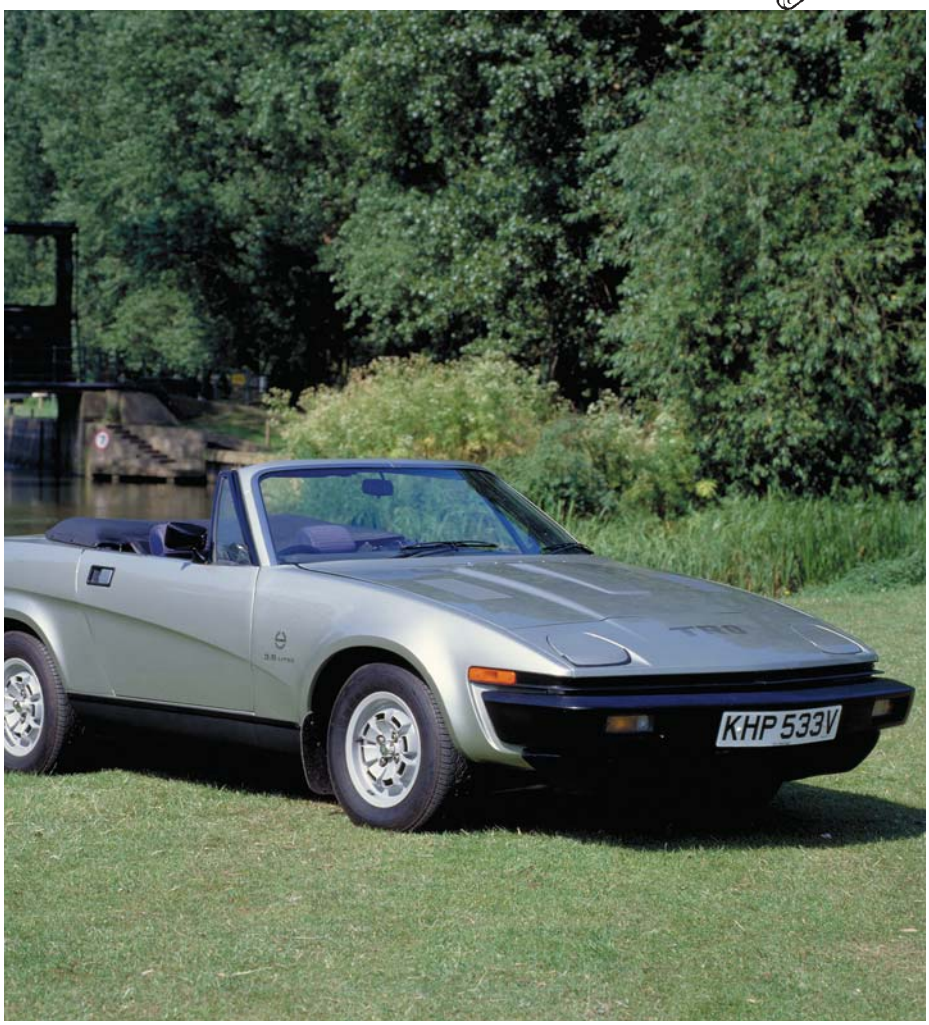

QUAIFE LIMITED SLIP DIFFERENTIALS FOR EXTRA TRACTION

V8 CWP & LSD

Please refer to main TR7 Rear Axle (5 speed) section for rear axle/differential components.

Crown Wheel & Pinion *(3.08:1 Ratio)* (1) **TKC2945**
Gear set.

Limited Slip Diff' unit *(Quaife)* (1) **RB7003**
See photo.

TO ORDER: 01522 568000
www.rimmerbros.co.uk

Description Qty Req. Part No.

TR8 (TR7) SUSPENSION DETAILS

With the exception of the TR8 front subframe, and its mounting bolts & spacers, this section is virtually identical to the uprated TR7 suspension listed earlier in the catalogue.

As we recommend that the suspension is uprated when converting to TR8 spec, we have listed the necessary kits & individual parts again for ease of reference.

Please also refer to following page for details of uprated suspension components and kits.

Description Qty Req. Part No.

Description Qty Req. Part No.

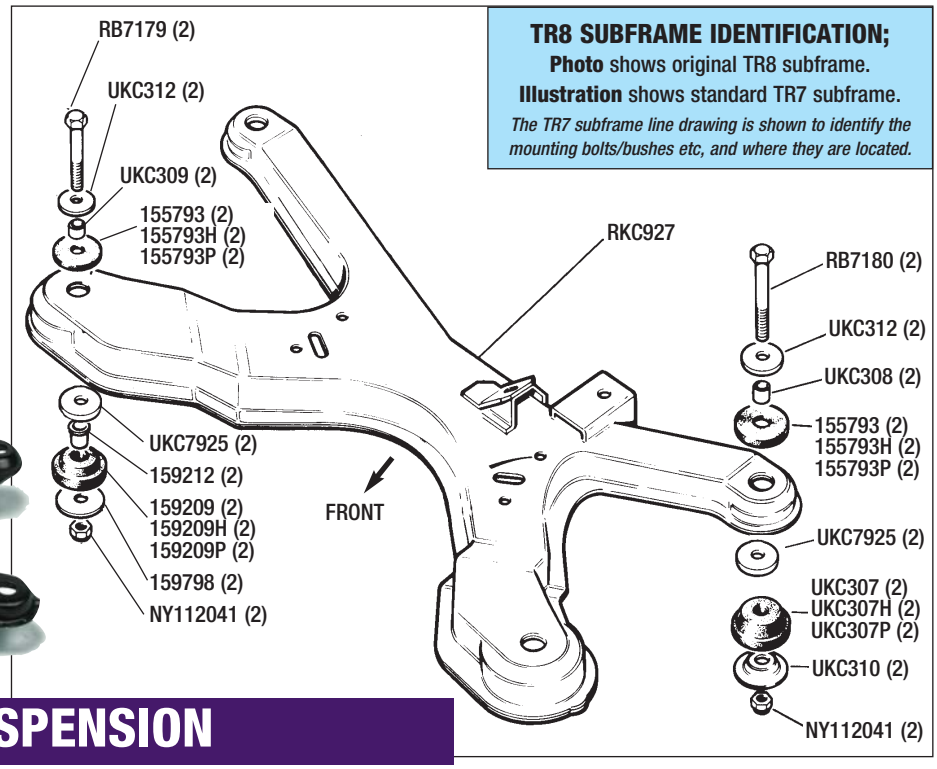

TR8 SUBFRAME IDENTIFICATION;
Photo shows original TR8 subframe.
Illustration shows standard TR7 subframe.
The TR7 subframe line drawing is shown to identify the mounting bolts/bushes etc, and where they are located.

FRONT SUSPENSION

V8 Front Subframe

*For engine mountings & brackets, please refer to; **V8 Engine & Gearbox Mountings.***

Front Subframe - New *Original TR8 Specification.*	(1)	**RKC927**
Subframe Bush Kit; *Includes; 2-159209, 2-UKC307 & 4-155793 bushes.*		
Standard bushes	(1)	**RB7061**
Uprated (Hard) bushes	(1)	**RB7061H**
Uprated (Poly) bushes	(1)	**RB7061P**
Subframe Bolt Kit *Includes nuts/bolts/spacers/washers marked + Note; Includes subframe mounting spacers & longer bolts - for additional engine to bonnet clearance. If spacers are not required order the standard TR7 subframe bolt kit (RB7025), which contains standard length bolts.*	(1)	**RB7102**
Subframe Spacer Kit only *Includes spacers/nuts/bolts marked * in subframe text. Increases engine/bonnet clearance.*	(1)	**RB7135**

FRONT MOUNTINGS

Bolt+* *For use with subframe spacer application.*	(2)	**RB7179**
Washer+ *(Upper)*	(2)	**UKC312**
Spacer+ *(Upper)*	(2)	**UKC309**
Mounting Rubber *(Upper);*		
Standard	(2)	**155793**
Uprated *(Hard)*	(2)	**155793H**
Uprated *(Poly)*	(2)	**155793P**
Spacer+* *(Lower)*	(2)	**UKC7925**
Spacer+ *(Lower)*	(2)	**159212**
Mounting Rubber *(Lower);*		
Standard	(2)	**159209**
Uprated *(Hard)*	(2)	**159209H**
Uprated *(Poly)*	(2)	**159209P**
Washer+ *(Lower)*	(2)	**159798**
Nut+*	(2)	**NY112041**

REAR MOUNTINGS

Bolt+* *For use with subframe spacer application.*	(2)	**RB7180**
Washer+ *(Upper)*	(2)	**UKC312**
Spacer+ *(Upper)*	(2)	**UKC308**
Mounting Rubber *(Upper);*		
Standard	(2)	**155793**
Uprated *(Hard)*	(2)	**155793H**
Uprated *(Poly)*	(2)	**155793P**
Spacer+* *(Lower)*	(2)	**UKC7925**
Mounting Rubber *(Lower);*		
Standard	(2)	**UKC307**
Uprated *(Hard)*	(2)	**UKC307H**
Uprated *(Poly)*	(2)	**UKC307P**
Retainer+ *(Lower mounting)*	(2)	**UKC310**
Nut+*	(2)	**NY112041**

V8 Anti-Roll Bar - Front

Items listed here are those we recommend when converting to TR8 specification. All other parts as standard TR7.

Anti-Roll Bar - Uprated *See also 'Uprated Anti-roll Bar Kit' page 168. Increased roll stiffness (30%) for improved handling. Powder coated. Uses original mountings. (Front Bushes UKC210 require reaming out from 19mm to 22.5mm).*	(1)	**RKC30UR**
Anti-Roll Bar Bush Kit; *Includes; 4-TKC6097 & 2-UKC210 bushes.*		
Standard bushes	(1I)	**RB7045**
Uprated (Hard) Bushes	(1)	**RB7045H**
Uprated (Poly) Bushes	(1)	**RB7045P**
Anti-Roll Bar Bolt Kit	(1)	**RB7348**
Front 'Anti-Dive' Kit *Kit includes 2 aluminium spacer blocks, extra long bolts (& nuts). Aluminium blocks fit between subframe & anti-roll bar to increase resistance of car front end 'diving' under heavy braking. For use with standard roll bar only.*	(1)	**RB7100**

V8 Track Arm Bushes

Items listed here are those we recommend when converting to TR8 specification. All other parts as standard TR7.

Track Arm Mounting Bush;		
Standard	(2)	**CRC1709**
Uprated (Hard)	(2)	**CRC1709H**
Uprated (Poly)	(2)	**CRC1709P**

V8 Strut Insert & Spring

*See also; **TR8 SHOCK ABSORBER/SPRING PACKAGES.** Items listed here are those we recommend when converting to TR8 specification. All other parts as standard TR7.*

SAFETY NOTE: we recommend fitting strut inserts in pairs.

Strut Insert *(Shock absorber);*		
Spax Insert *(Each)* *Heavy Duty*	(2)	**GSA2024S**
Spax Insert TA2 *(Pair)* *On Car Adjustable*	(1)	**GSA2024STA2**
Koni Insert *(Pair)* *Off Car Adjustable*	(1)	**GSA2024K**
Gaz Insert *(Pair)* *On Car Adjustable.*	(1)	**GSA2024G**
Front Spring-Uprated *Fit in pairs. Uprated to 200lb, 1" lowered ride height. Bump stop should be shortened when fitting lowered front springs. Springs should only be fitted in vehicle sets, 2 front/2 rear.*	(2)	**TKC1328UR**

REAR SUSPENSION

V8 Anti-Roll Bar - Rear

Anti-Roll Bar - Uprated *See also 'Uprated Anti-Roll Bar Kit' page 168. Increased roll stiffness (30%) for improved handling. Powder coated.*	(1)	**TKC253UR**

V8 Trailing Arm & Tie Bar Bushes

*See also: **TR8 SUSPENSION BUSH/BOLT KITS.** Items listed here are those we recommend when converting to TR8 specification. All other parts as standard TR7.*

Trailing Arm Bush;		
Standard	(4)	**ULC1580**
Uprated (Hard)	(4)	**ULC1580H**
Uprated (Poly)	(4)	**ULC1580P**
Tie Bar Bush;		
Standard	(4)	**UKC5514**
Uprated (Hard)	(4)	**UKC5514H**
Uprated (Poly)	(4)	**UKC5514P**

V8 Shock Absorber & Spring

*See also; **TR8 SHOCK ABSORBER/SPRINGPACKAGES.** Items listed here are those we recommend when converting to TR8 specification. All other parts as standard TR7.*

SAFETY NOTE: we recommend fitting shock absorbers in pairs.

Shock Absorber *(Inc bushes);*		
Spax *(Pair)* *On Car Adjustable.*	(1)	**GSA374S7**
Koni *(Pair)* *Off Car Adjustable.*	(1)	**GSA374K7**
Gaz *(Pair)* *On Car Adjustable.*	(1)	**GSA374G7**
Rear Spring-Uprated *Uprated to 200Lb, 1" lowered ride height. Note: when fitting uprated rear springs, install with retaining kit (TKC3300URFK)to hold springs in position. Springs should only be fitted in vehicle sets, 2 front/2 rear.*	(2)	**TKC3300UR**
Retaining Kit *(Uprated Rear Springs)* *For 2 springs. Kit includes retaining plates/hooks, bolts, nuts & washers.*	(1)	**TKC3300URFK**

V8 SUSPENSION PACKAGES

SHOCK ABSORBER & SPRING PACKAGES

STANDARD OR UPRATED SUSPENSION PACKAGE ?	Triumph Standard	SPAX Uprated	SPAX Uprated	Koni Uprated	GAZ SHOCKS Uprated
Our popular Suspension Packs are excellent value for money. • Save money and buy a kit! • Easy to order • Improve handling • Increased safety • Bush & Bolt kits available	FRONT INSERTS WITH REAR SHOCK ABSORBERS	FRONT INSERTS WITH REAR ADJUSTABLE SHOCK ABSORBERS	ADJUSTABLE 'ON CAR' FRONT INSERTS WITH REAR ADJUSTABLE SHOCK ABSORBERS	ADJUSTABLE 'OFF CAR' FRONT INSERTS WITH REAR ADJUSTABLE SHOCK ABSORBERS	ADJUSTABLE 'ON CAR' FRONT INSERTS WITH REAR ADJUSTABLE SHOCK ABSORBERS
Suspension/Package Contents	***ORDER KIT NO***	***ORDER KIT NO***	***ORDER KIT NO***	***ORDER KIT NO***	***ORDER KIT NO***
INSERTS & SHOCK ABSORBERS 2 Front Strut Inserts 2 Rear Shock Absorbers	RB7059	RB7059S	RB7059STA2	RB7059K	RB7059G
INSERTS & SHOCK ABSORBERS WITH STANDARD SPRINGS 2 Front Strut Inserts 2 Rear Shock Absorbers 4 Standard Road Springs	RB7696	RB7696S	RB7696STA2	RB7696K	RB7696G
INSERTS & SHOCK ABSORBERS WITH UPRATED SPRINGS 2 Front Strut Inserts 2 Rear Shock Absorbers 4 Uprated Road Springs *(200Lb, ride height lowered 1")* *NB. Bump stops should be shortened when fitting lowered front springs. Install rear springs with retaining kit TKC3300URFK.*	RB7700	RB7700S	RB7700STA2	RB7700K	RB7700G
INSTALLATION KIT **GAITERS/TIES/SPRING RUBBERS** 2 Front Strut Gaiters 2 Front Gaiter Ties 4 Front Spring Insulator Rubbers* 4 Rear Spring Insulator Rubbers* **Available in rubber or polyurethane material.*	RB7007	RB7007	RB7007	RB7007	RB7007

ANTI-DIVE KIT

Kit includes 2 aluminium spacer blocks, extra long bolts (& nuts).

Aluminium blocks fit between subframe & front anti-roll bar to increase resistance of car front end 'diving' under heavy braking. For use with standard front anti-roll bar only.

FRONT 'ANTI-DIVE' KIT (1) **RB7100**

Why not fit this Anti-Dive Kit with one of our uprated Suspension packs?

UPRATED FRONT & REAR ANTI-ROLL BAR KIT

Transform the handling of your TR7 or TR8 by fitting a pair of uprated anti-roll bar's. Increased roll stiffness (30%) and powder coated for meaningful apperance. Kit is supplied complete with polyurethane mounting bushes (UKC210 front bushes require reaming out from 19mm to 22.5mm) and mounting kit.

UPRATED FRONT & REAR ANTI-ROLL BAR KIT (1) **RB7695**

Includes front & rear roll bars, polyurethane mounting bush kit and mounting bolt kit.

TO ORDER: 01522 568000
www.rimmerbros.co.uk

V8 SUSPENSION BUSH & BOLT PACKAGES

By ordering our Front/Rear Suspension Bush & Bolt Packs you will have everything you need when upgrading (or overhauling) your TR7 suspension to TR8 specification, and save money too!		STANDARD BUSHES	UPRATED BUSHES (HARD)	POLYURETHANE BUSHES
KIT DESCRIPTION	*KIT CONTENTS*	*ORDER KIT NO*	*ORDER KIT NO*	*ORDER KIT NO*
Front/Rear Suspension BUSH KIT A	**Car set.** Less Subframe Mounting Bushes. Includes 2 track arm bushes (CRC1709), 6 anti-rollbar bushes (4 TKC6097 & 2 UKC210), 4 rear trailingarm bushes (ULC1580), & 4 rear tie bar bushes (UKC5514). *Use with Suspension Bolt Kit 'A' (RB7113)*	RB7017	RB7017H	RB7017P
Front/Rear Suspension BOLT KIT A	**Car set.** Bolt set includes all necessary nuts, bolts & washers *To fit Suspension Bush Kit 'A' (RB7017 - RB7017H - RB7017P)*	RB7113	RB7113	RB7113
Front/Rear Suspension BUSH KIT B	**Car set.** With Subframe Mounting Bushes. Contents as Bush Kit A (RB7017), but includes 8 subframe bushes (2 159209, 2 UKC307 & 4 155793) *Use with Suspension Bolt Kit 'B1' (RB7200)*	RB7126	RB7126H	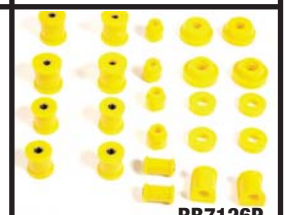 RB7126P
Front/Rear Suspension BOLT KIT B1	**Car set.** Bolt set includes all necessary nuts, bolts and washers as Bolt Kit A (RB7113), but also includes additional 'extra long' TR8 subframe bolts (for use with spacers), washers, nuts and spacers. *To fit Suspension Bush Kit 'B' (RB7126 - RB7126H - RB7126P)*	RB7200	RB7200	RB7200
Front Subframe BUSH KIT C	**Car set.** Includes 8 subframe mounting bushes, (2 159209, 2 UKC307 & 4 155793). *Use with Front Subframe Bolt Kit 'C1' (RB7102)*	RB7061	RB7061H	RB7061P
Front Subframe BOLT KIT C1	**Car set.** Inc spacers/longer bolts to increase engine /bonnet clearance. If spacers not required order Standard TR7 subframe bolt kit - RB7025 which contains standard length bolts. Bolt set inc 2 RB7179 bolts, 2 RB7180 bolts, 4 UKC312 washers, 2 UKC309 spacers, 2 UKC308 spacers, 4 UKC7925, 2 159212 spacers, 2 159798 washers, 2 UKC310 retainers & 4 NY112041 nuts. *To fit Front Subframe Bush Kit 'C' (RB7061 - RB7061H- RB7061P)*	RB7102	RB7102	RB7102
Front Subframe SPACER KIT D	**Car set.** This kit is included in Bolt kit'C1' RB7102. Includes 2-RB7179 bolts, 2-RB7180 bolts, 4-UKC7925 spacers & 4 nuts - NY112041. *Use to increase engine/bonnet clearance.*	RB7135	RB7135	RB7135
Anti-Roll Bar BUSH KIT E	**Car set.** Includes 2 mounting bushes (UKC210), and 4 end bushes (TKC6097). *Use with Anti-Roll Bar Bolt Kit 'E' (RB7348)*	RB7045	RB7045H	RB7045P
Anti-Roll Bar BOLT KIT E	**Car set.** Bolt set includes all necessary nuts, bolts & washers. For kit contents see Front 'Anti-Roll Bar'. *To fit Anti-Roll Bar Bush Kit 'E' (RB7045 - RB7045H - RB7045P)*	RB7348	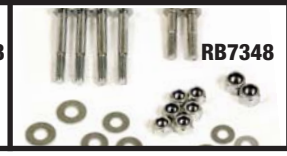 RB7348	RB7348

Description Qty Req. Part No. Description Qty Req. Part No. Description Qty Req. Part No.

UPRATED BRAKE KIT (FRONT)

We now supply one type of front Uprated Brake Kit (RB7117) for all TR7 & TR8 conversion applications. This utilises large calipers derived from the Rover SD1 Vitesse and adapted for use with special vented brake discs suitable for mounting to the 4-stud TR7 hub. This kit **cannot** be used with standard TR7 (13") wheels because of insufficient running clearance inside the wheel due to the larger calipers. It is therefore necessary to fit a minimum 14" diameter wheel (see 'Roadwheels' for details on our Minilite Replica Wheel Sets) with this kit.

For our long standing customers who have previously purchased an uprated brake kit (solid or vented) using the smaller 4 - pot calipers (RB7090 or RB7137) - retaining the 13" wheels - then we still supply service items for these kits (eg discs, pads, caliper repair kit etc) as listed below.

UPRATED BRAKE KIT

This kit is comprised of components derived from the Rover Vitesse, adapted to fit the standard TR7 4-stud hub, it includes: 2 vented brake discs, 2 large '4-pot' calipers, brake pads, 2 braided brake hoses, fittings & instructions.

Uprated Brake Kit (1) **RB7117**

This kit cannot be used with standard 13" TR7 wheels, minimum 14" wheels must be used for internal clearance. See Road Wheels section for details of 14" Minilite (Replica) wheel sets.

See also; ***Service Items-Uprated Brake Kits***

BRAKE PAD SURFACE AREA COMPARISON

THIS IS A GOOD REASON TO FIT UPRATED BRAKES.

SERVICE ITEMS FOR RIMMER BROS UPRATED BRAKE KITS

For our long standing customers who have previously purchased an Uprated Brake Kit (solid or vented) using the smaller 4 - pot calipers (RB7090 or RB7137) - retaining the 13" wheels - then we still supply service items as listed below.
Additionally, service items for our Uprated Brake Kit (RB7117) are also available.

Brake Pad Set;
- For Brake Kits RB7090 & RB7137
  - Standard Material (1) **RB7124**
  - Uprated 'Green Stuff' (Kevlar) (1) **RB7124GS**
- For Brake Kit RB7117
  - Standard Material (1) **GBP267**
  - Uprated 'Green Stuff' (Kevlar) (1) **GBP267GS**

Brake Disc (Replacement);
- Solid Disc *(For Kit RB7090)* (2) **RB7090A**
- Vented Disc *(For Kit RB7137)* (2) **RB7137A**
- Vented Disc *(For Kit RB7117)* (2) **RB7117A**

Pad Clip Kit *(anti-rattle);*
Includes 4 brake pad retaining clips.
- For Brake Kit RB7090 (1) **RB7176**
- For Brake Kit RB7137 (1) **RB7189**
- For Brake Kit RB7117 (1) **RB7196**

Pad Pin Kit *(Pad securing);*
Includes 4 brake pad retaining pins.
- For Brake Kit RB7090 (1) **RB7177**
- For Brake Kit RB7137 (1) **RB7190**
- For Brake Kit RB7117 (1) **RB7197**

Anti-Squeal Shims (4) **RX1409**
Stick-on type. Cut to fit.

Copaslip Slip *(85g Tube)* (1) **RX1345**

Caliper Repair Kit *(Kits are per caliper)*
- For Brake Kits RB7090 & RB7137(2) **RB7159**
- For Brake Kit RB7117 (2) **AEU1547**

Caliper Piston*(4 pistons per caliper):*
- For Brake Kits RB7090 & RB7137(4) **RB7086**
- For Brake Kit RB7117 (4) **606683**

Bleed Screw (Caliper) (6) **RTC1526**
Fits all 4 - pot calipers.

OTHER RECOMMENDED UPRATED BRAKING IMPROVEMENTS

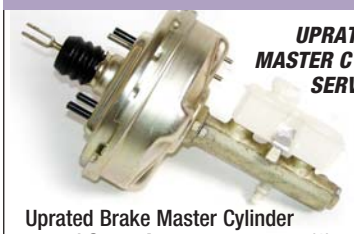

UPRATED BRAKE MASTER CYLINDER & SERVO RB7656

Uprated Brake Master Cylinder and Servo Assy (1) **RB7656**
Modified Rover servo to fit TR7/8.

Brake Hoses - Stainless Steel Braided;
For firmer brake pedal pressure.
- Front Flexible Hose *(each)* (2) **GBH418GR**
- Rear Flexible Hose (1) **GBH219GR**
- Car Set of 3 (1) **RB2011**

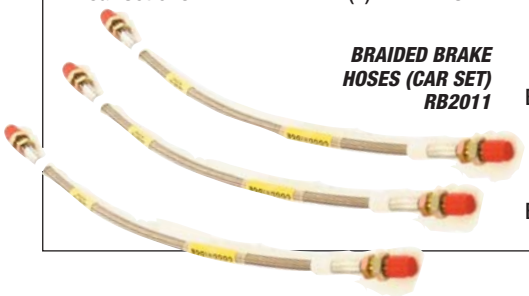

BRAIDED BRAKE HOSES (CAR SET) RB2011

Wheel Cylinder (2) **GWC1213**
When fitted to 5 speed & late automatic vehicles, this cylinder will increase rear braking power, due to smaller (than standard) internal diameter.

Brake Fluids;
- Standard (Dot 3) *(1 Litre)* (a/r) **GBF103**
- Silicone *(0.5 Litre)* (a/r) **RX1327**
- Silicone *(1 Litre)* (a/r) **RX1326**

Brake Cleaner *(Unipart-aerosol)* (1) **GBF901**

TR8 Original Brake Components

This section lists replacement components for original Left Hand Drive TR8's.
Please refer to TR7 Brake System for other components.

Front Brake Disc (Solid) (2) **TKC3157**
With identifying groove around disc circumference.

Brake Pads
- Pads only *(Standard)* (1) **GBP242**
- Pads & Fitting Kit (1) **GBP242K**
- Pads only *(Uprated, Kevlar)* (1) **GBP242GS**
- Pads & Fitting Kit (1) **GBP242GSK**
  Uprated, Kevlar.

Brake Caliper *(2 pot);*
- Rh (1) **AAU7960**
- Lh (1) **AAU7961**

Caliper Repair Kit (2) **8G8641**
Per caliper.

Rear Wheel Cylinder (2) **GWC1213**

Cylinder Repair Kit (2) **GRK2014**
Kit is per cylinder.

Brake Servo unit (1) **AAU7925**

Servo Repair Kit *(Original TR8)* (1) **AAU7924**

Gasket *(Servo mounting)* (1) **CRC250**

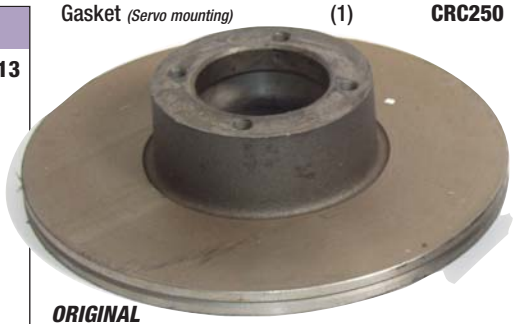

ORIGINAL TR8 BRAKE DISC TKC3157

TO ORDER: 01522 568000
www.rimmerbros.co.uk

Description	Qty Req.	Part No.

V8 Manual Steering Rack

The standard TR7 steering rack (& couplings) can be be used on a TR8 conversion, we do however recommend that you fit either a new or reconditioned steering rack - especially if the condition/state of your existing steering rack is unknown or suspect. Please refer to TR7 Steering section.

V8 Power Rack Conversion (RHD)

Our Power Steering Conversion Kit has been developed specifically for the TR7 to TR8 conversion.
You will need to purchase the power steering rack, installation kit, 2 track rod ends and steering shaft.

Description	Qty Req.	Part No.
Power Steering Rack *Inc gaiters. Less track rod ends.*	(1)	**RB7316R**
Installation Kit *(Power rack)* *Inc; mounting brackets, pump, pipes/hoses & drive belt.*	(1)	**RB7298**
Steering Shaft *(Power Rack)* *Not included in PAS installation kit.*	(1)	**UKC7951**
Track Rod End *Not included with PAS rack.*	(2)	**GSJ185**
Nut-Locking *Track rod end to track rod.*	(2)	**NT114040**

REPLACEMENT/SERVICE ITEMS
FOR RHD PAS CONVERSION

Description	Qty Req.	Part No.
Seal Kit *For power steering rack RB7316R.*	(1)	**RB7501**
Rack Gaiter *(Steering rack)* *Replacement for PAS rack.*	(2)	**RTC2219**
Fasteners-Rack Gaiter;		
Wire Tie *(Inner-large)*	(2)	**512781**
Clip *(Outer-small)*	(2)	**UKC5533**
Drive Belt-PAS Pump *Replacement.*	(1)	**GFB20864**

TR8 Original Power Rack (LHD)

See Illustration.

Description	Qty Req.	Part No.
Power Steering Rack (LHD) *Recon. Inc gaiters. Less track rod ends.*	(1)	**CAX2170R**
Steering Shaft	(1)	**UKC7951**
Track Rod End *Not included with PAS rack.*	(2)	**GSJ185**
Nut-Locking *Track rod end to track rod.*	(2)	**NT114040**
Seal Kit *For power steering rack CAX2170R.*	(1)	**RTC2393A**
Rack Gaiter *(Steering rack)* *Replacement for PAS rack.*	(2)	**RTC2219**
Fasteners-Rack Gaiter;		
Wire Tie *(Inner-large)*	(2)	**512781**
Clip *(Outer-small)*	(2)	**UKC5533**
Drive Belt-PAS Pump *Replacement.*	(1)	**GFB20864**

V8 Steering Wheel & Boss

*See also; **TR7 STEERING** for other steering wheels.*

Description	Qty Req.	Part No.
Steering Wheel - TR8 Original; *Leather (Moto-Lita) wheel fits all models.* *Complete with boss & wheel centre.*		
Black Leather rim	(1)	**PKC1295Black**
Blue Leather rim	(1)	**PKC1295Blue**
Wheel Centre *(Original TR8)*	(1)	**ULC2999**

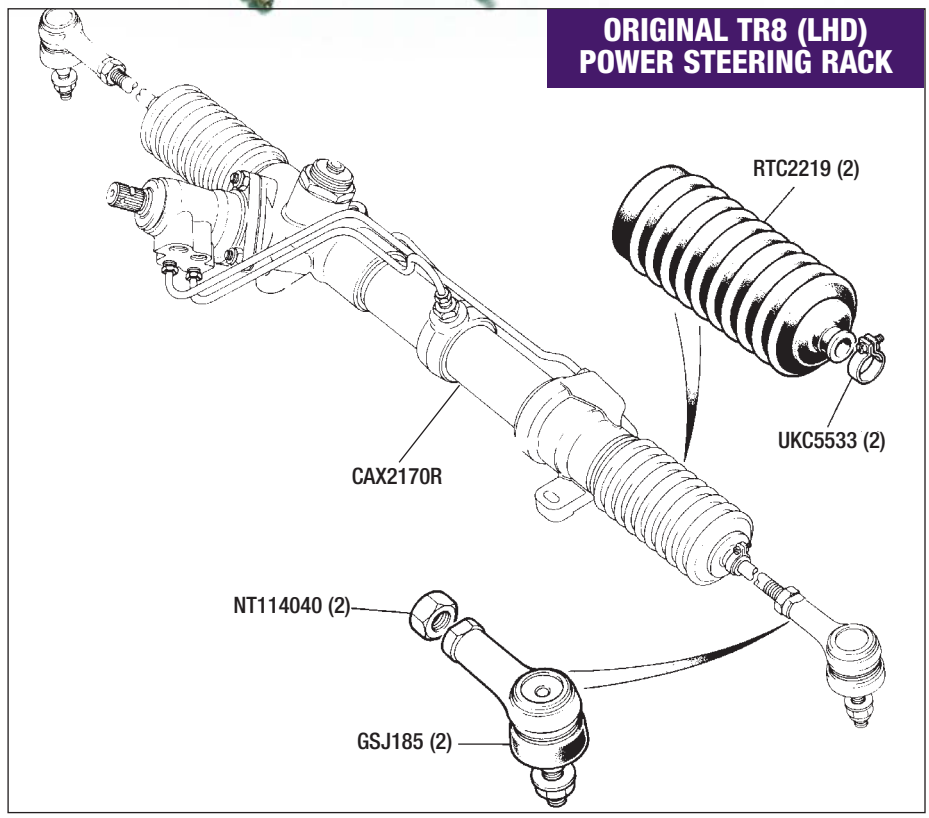

Please refer to 'TR7 Steering Wheel' Section for other steering wheels.

Description | Qty Req. | Part No.

V8 Engine Electrics - Major Units

STARTER MOTOR

Starter Motor *(including solenoid);*		
TR8 type		
Standard	(1)	**NAD101190**
Uprated Hi-Torque	(1)	**GXE4442UR**
SD1 type		
Standard	(1)	**GXE4442**
Uprated Hi-Torque	(1)	**GXE4442UR**
Starter Overhaul Kit	(1)	**RB7341**
For TR8 type only. Includes new internals, less solenoid.		
Starter Solenoid	(1)	**520473**
Starter Solenoid Cap only	(1)	**520473C**
Engine Earth Strap	(1)	**UKC7462**
Starter Cable	(1)	**UKC8346**

ALTERNATOR

Alternator *(Alter 'Handing' to suit);*		
Standard *(17 ACR)*	(1)	**GXE8211**
Heavy Duty *(25 ACR)*	(1)	**GXE2113**
Fan Belt		
Carb *(No A/C)*	(1)	**GFB215**
EFi *(With A/C)*	(1)	**GCB51118**

V8 UPRATED HI-TORQUE STARTER MOTOR

Fits as direct replacement to all saloon based vehicles (SD1, TR8, TR7 V8, MGB V8 etc). Starts engine regardless of compression or temperature. Up to 200% more cranking power using up to 50% less current.

Uprated Hi-torque Starter Motor (1) **GXE4442UR**

V8 Engine Electrics - Ignition System

DISTRIBUTOR - ORIGINAL TR8

Electronic Lucas distributor. Carb' engines only.

Distributor *(Original)* *Complete with vacuum unit.*	(1)	**ERC3047**
Electronic 'Pick-up' Module	(1)	**AAU3988**
Distributor Clamp	(1)	**613857**
Retaining Bolt	(1)	**GHF166**

DISTRIBUTOR - SD1/TR8 CONVERSION

Distributor - V8;		
Lucas 35DE 8* ('76-'85)	(1)	**ERC3047EL**
Lucas DM8* ('82-'85) -		
Carbs	(1)	**ERC8814**
EFi	(1)	**ERC9122**
Lucas DLM8* ('85 On) -		
Carbs	(1)	**ADU8817**
EFi	(1)	**ADU8818**
**Stamped on Distributor Body*		
Mallory Performance Distributor *High quality replacement distributors, complete with adjustable mechanical & vacuum advance.*		
TR8/SD1 Dual Point	(1)	**RB7459**
TR8/SD1 Electronic	(1)	**RB7459EL**
P6 Type	(1)	**RB7458**

Description | Qty Req. | Part No.

V8 DISTRIBUTOR ASSEMBLY

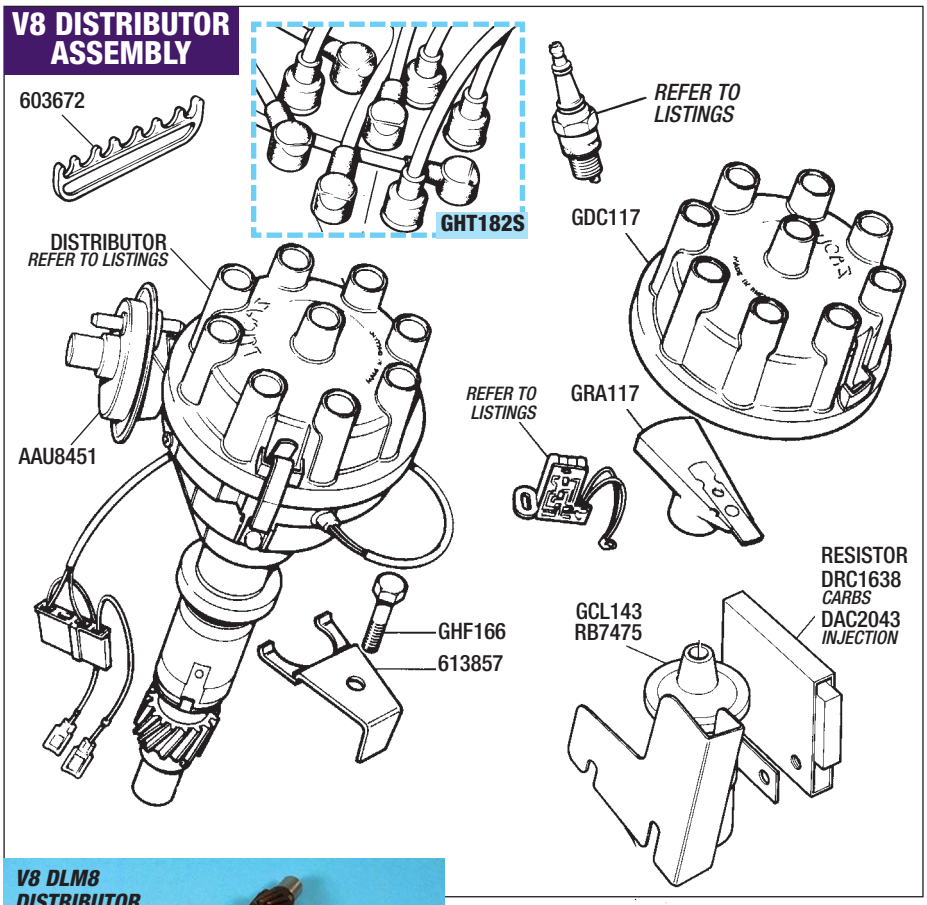

Disitributor Cap;		
Lucas Type	(1)	**GDC117**
Mallory Type	(1)	**RB7469**
Rotor Arm;		
Lucas Type	(1)	**GRA117**
Mallory Type	(1)	**RB7472**
Contact Breaker Points;		
V8 - Mallory	(2)	**RB7470**
Vacuum Advance Unit;		
Lucas	(1)	**AAU8451**
Mallory	(1)	**RB7473**
Pick-up Module/Baseplate;		
Opus ('76-'85)	(1)	**AAU3988**
DM8 ('82-'85)	(1)	**AEU1760**
DLM8 ('85 On)	(1)	**BAU5106**
Timing Rotor - V8 Opus	(1)	**AAU2873**
Condenser;		
Original *(where fitted)*	(1)	**AEU1239**
Mallory	(1)	**RB7471**
Distributor Drive Gear - V8	(1)	**ERC1353A**
'O' Ring - V8 Distributor Shaft	(1)	**603446**
Diagnostic Timing Sensor - V8	(1)	**DRC1110**
Ignition Module - Late SD1 Models; *Fixed to distributor casing.*		
V8 *(35DLM 8)*	(1)	**NJL100060**
Ballast Resistor;		
Opus 35DE8 Distributor *('76-'85)*	(1)	**DRC1638**
EFi Vehicles	(1)	**DAC2043**
Mallory Distributor	(1)	**RB7476**
Fits points & electronic type mallory distributors.		
Suppressor - Coil *(Radio anti-interference)*	(1)	**DRC1068**
Amplifier Module *('82 Onwards)* *Underneath Coil (35 DM8).*	(1)	**AEU1917**

DISTRIBUTOR P6

Single contact point type distributor.

Distributor *Complete with vacuum unit.*	(1)	**614031**
Contact Breaker Points	(1)	**GCS108**
Condenser	(1)	**GSC111**
Rotor Arm	(1)	**GRA112**
Drive Gear *Locates on distributor shaft.*	(1)	**605217**

PLUGS/PLUG LEADS (ALL)

Spark Plugs;		
TR8 *(19mm reach-Hot plug)*		
Standard	(8)	**GSP4382**
Hi-Performance	(8)	**GSP4382HP**
SD1 *(19mm reach-Warm plug)*	(8)	**GSP4362**
SD1/EFI *19mm Double Core-Resistor plug.*	(8)	**GSP6462**
P6 *(To 1976-12mm reach plug)*	(8)	**GSP4376**
Spark Plug Spanner	(1)	**GAT140**
Plug Lead Set - Silicone type	(1)	**GHT182S**
Plug Lead Retainer;		
Loose	(1)	**603673A**
Fixed	(1)	**603672A**

IGNITION COIL (All variants)

Ignition Coil;		
Standard *Ballast Resistor Type.*	(1)	**GCL143**
Uprated (Moroso, Chrome) *For Mallory Dual Point. Fit with Ballast Resistor RB7476.*	(1)	**RB7475**

TO ORDER: 01522 568000
www.rimmerbros.co.uk

Description	Qty Req.	Part No.	Description	Qty Req.	Part No.	Description	Qty Req.	Part No.

LUMENITION KITS

A Lumenition kit is available for the V8 Opus distributor, fitted from '76-'85 (SD1). The kit converts the magnetic pick-up type electronic distributor to the simpler and more reliable optical triggering system.

No kit is available for the 35DM8 distributor (1985 on).

Lumenition Electronic Ignition Kit;
Inc. power pack & fitting kit.

3500 *(35 DE8 Opus distributor '76-'85 SD1 only)*		
Standard Kit	(1)	**RB7323**
Performance Kit (inc Coil)	(1)	**RB7323P**
3500 *(P6 - Points Type)*		
Standard Kit	(1)	**RB7270**
Performance Kit (inc Coil)	(1)	**RB7270P**

OIL PRESSURE GAUGE KIT

Oil Pressure Gauge Kit	(1)	**RX1351/0**
'T' Piece	(1)	**RX1352**
Use if retaining oil pressure warning light.		
Bracket *(for remote mounting of gauge)*	(1)	**RB7050**

V8 BATTERY & FITTINGS
BOOT MNOUNTED

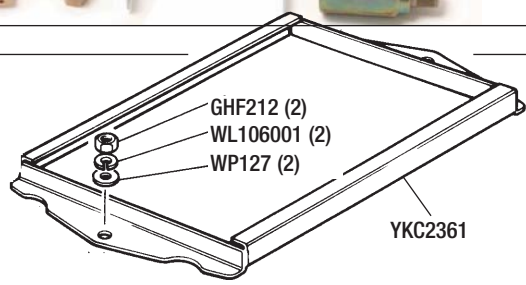

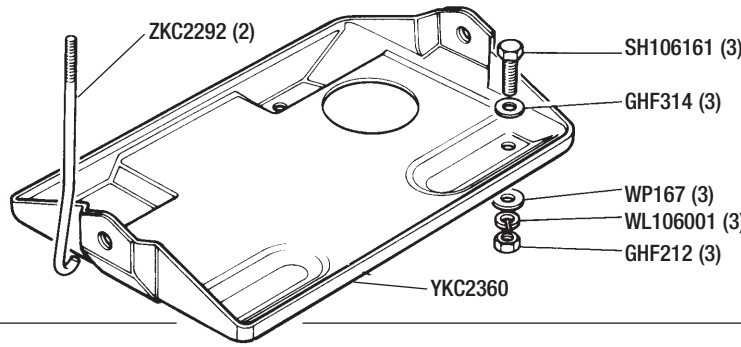

V8 Instruments

TR8 Instrument Panel		
Pod Assembly	(1)	**RKC2013**
New, complete with speedo, rev counter (8 cyl), time clock, temperature gauge, volt gauge, fuel gauge, printed circuit and facia cover, etc.		
NOTE: please state whether; UK, European, or USA spec speedo is required.		
TR7/8 Rev' Counter *(8 cylinder)*	(1)	**TKC2587**
Re-calibrated.		
Speedo Cable;		
Converted TR7	(1)	**GSD287**
Vehicles to 1981/VIN 402026		
Converted TR7	(1)	**GSD388**
Vehicles from 1981/VIN 402027		
Original TR8 *(LHD only)*	(1)	**GSD333**

V8 Battery & Fittings

Batteries not available on mail-order, Collection only.

Battery-Heavy Duty *(Wet Charged)*	(1)	**RS1701**
Battery Installation Kit *(Boot)*	(1)	**RB7304**
Includes all items marked.*		
Locates battery in Rh corner of boot.		
TR8 Boot Floor Mat *(Hardura)*	(1)	**XKC2475PA**
Accommodates boot mounted battery.		
Retaining Frame-Upper*	(1)	**YKC2361**
Remanufactured.		
Retaining Rod*	(2)	**ZKC2292**
Nut*	(2)	**GHF212**
Washer-Spring*	(2)	**WL106001**
Washer-Flat*	(2)	**WP127**
Battery Tray-Lower*	(1)	**YKC2360**
Remanufactured (flat tray).		
Bolt*	(3)	**SH106161**
Washer-Flat*	(3)	**GHF314**
Washer-Flat*	(3)	**WP167**
Washer-Spring*	(2)	**WL106001**
Nut*	(3)	**GHF212**
Battery Leads *(inc clamp);*		
'Positive' lead*	(1)	**UKC7460**
From battery to starter.		
'Negative' lead*	(1)	**UKC7461**
Earths to boot floor.		
Battery Clamp only *(inc bolt/nut);*		
'Positive' clamp*	(1)	**GHF2755**
'Negative' clamp*	(1)	**GHF2750**
Engine Earth Strap	(1)	**UKC7462**
Engine to vehicle body.		
Starter Cable	(1)	**UKC8346**

Description	Qty Req.	Part No.	Description	Qty Req.	Part No.	Description	Qty Req.	Part No.

TRANSFER SET RB7276

'V8' Chromed Stick-on Badge (a/r) **BRC6484**

V8 Transfers

'TRIUMPH TR8' Transfer Set *(Strobed);*
As original specification.
Includes large 'TR8' for front panel, 'Triumph' & TR8' for boot lid, '3.5 Litre' and small 'Laurel' leaf transfers for lower part of front wings.

Black	(1)	**RB7276Black**
Gold	(1)	**RB7276Gold**
Silver	(1)	**RB7276Silver**
Red	(1)	**RB7276Red**

3.9 LITRE

'3.9 LITRE' Transfer Set *(Strobed);*
Includes 2 '3.9 Litre' Transfers.
Purchase in addition to TR8 transfer set RB7276.

Black	(1)	**RB7498Black**
Gold	(1)	**RB7498Gold**
Silver	(1)	**RB7498Silver**
Red	(1)	**RB7498Red**

4.6 LITRE

'4.6 LITRE' Transfer Set *(Strobed);*
Includes 2 '4.6 Litre' Transfers.
Purchase in addition to TR8 transfer set RB7276.

Black	(1)	**RB7708Black**
Gold	(1)	**RB7708Gold**
Silver	(1)	**RB7708Silver**

TRIUMPH

'LAUREL' Leaf *(Small - approx 50mm dia)*
Available separately from TR8 transfer set if required.

Black	(2)	**RB7178Black**
Gold	(2)	**RB7178Gold**
Silver	(2l)	**RB7178Silver**

TR8

'TR8' Glove Box Badge (1) **YKC4010**

3.5 LITRE

'3.5 LITRE' Transfer;
Pre-production style,.

Black	(2)	**RB7263Black**
Gold	(2)	**RB7263Gold**
Silver	(2)	**RB7263Silver**

V8

'V8' Transfer;
Pre-production style.

Black	(2)	**RB7306Black**
Gold	(2)	**RB7306Gold**
Silver	(2)	**RB7306Silver**

TR8 Over Mats

TR8 Over Mats (Pair) (1) **RB7305**
Made from a Tough Luxury 'Velour' type material, with sewn-in emblem, for RHD & LHD Vehicles.
Available in:- Black, Beige, Blue & Grey.

TR8 Mudflaps

Mudflaps (Pair)		
Front (plain)	(1)	**RB7282**
Rear (TR8)	(1)	**RB7302**
Fitting Kit		
Front	(1)	**RB7267**
Rear	(1)	**RB7277**

TO ORDER: 01522 568000
www.rimmerbros.co.uk

V8 KEY FOBS & BOOKS

Description	Qty Req.	Part No.

Key Fobs

Key Fob;		
'TR8'	(a/r)	**RB7502**
'V8'	(a/r)	**RX1537**

V8 Manuals & Books

TR7/TR8 'BL' Parts Book *Includes early TR7 (Coupe only) and factory TR8 (Carburettor) models.*	(1)	**RTC9020B**
TR8 Owners Handbook	(1)	**AKM4779**
TR8 'BL' Workshop Manual	(1)	**AKM3971**
TR8 Repair Operation Supplement	(1)	**AKM5015**
SD1 Rover Workshop Manual *Factory.*	(1)	**AKM5343**
SD1 Rover Workshop Manual *Haynes.*	(1)	**RO1069**
Carburettor Manual *(Haynes)*		
Stromberg & Weber	(1)	**RX1412**
SU	(1)	**RO1135**
V8 Engine Overhaul Manual *Land Rover publication (152 pages).* *Covers 3.5 - 4.6 engines.*	(1)	**RD1024**
The Rover V8 Engine *David Hardcastle. 208 pages.*	(1)	**RX1429**
Tuning Rover V8 Engines *David Hardcastle. 208 pages.*	(1)	**RX1430**

RTC9020B

AKM3971

AKM4779

AKM5015

AKM5343

RO1069

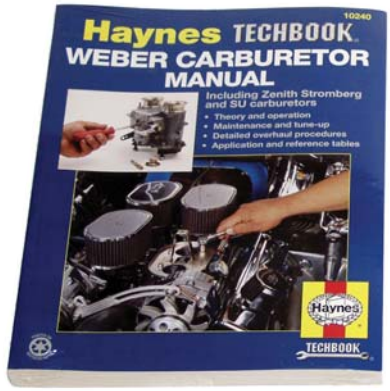

RX1412

RO1135

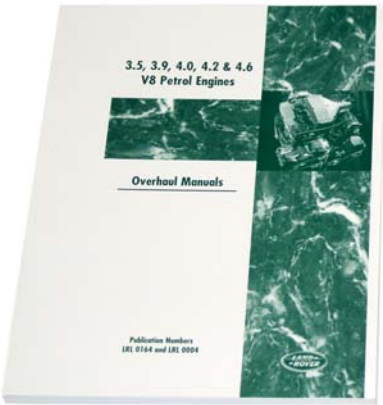

RD1024

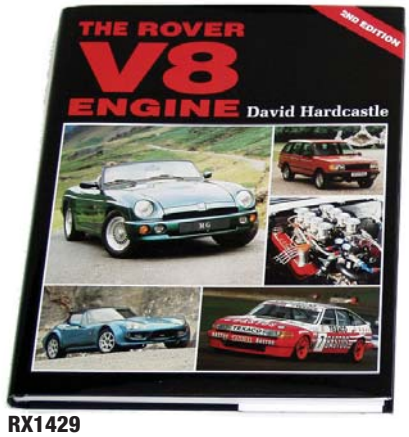

RX1429

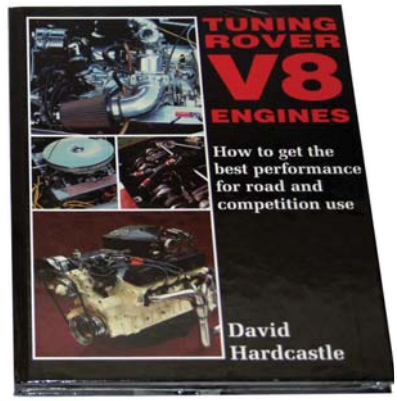

RX1430

TR7 16v SPRINT

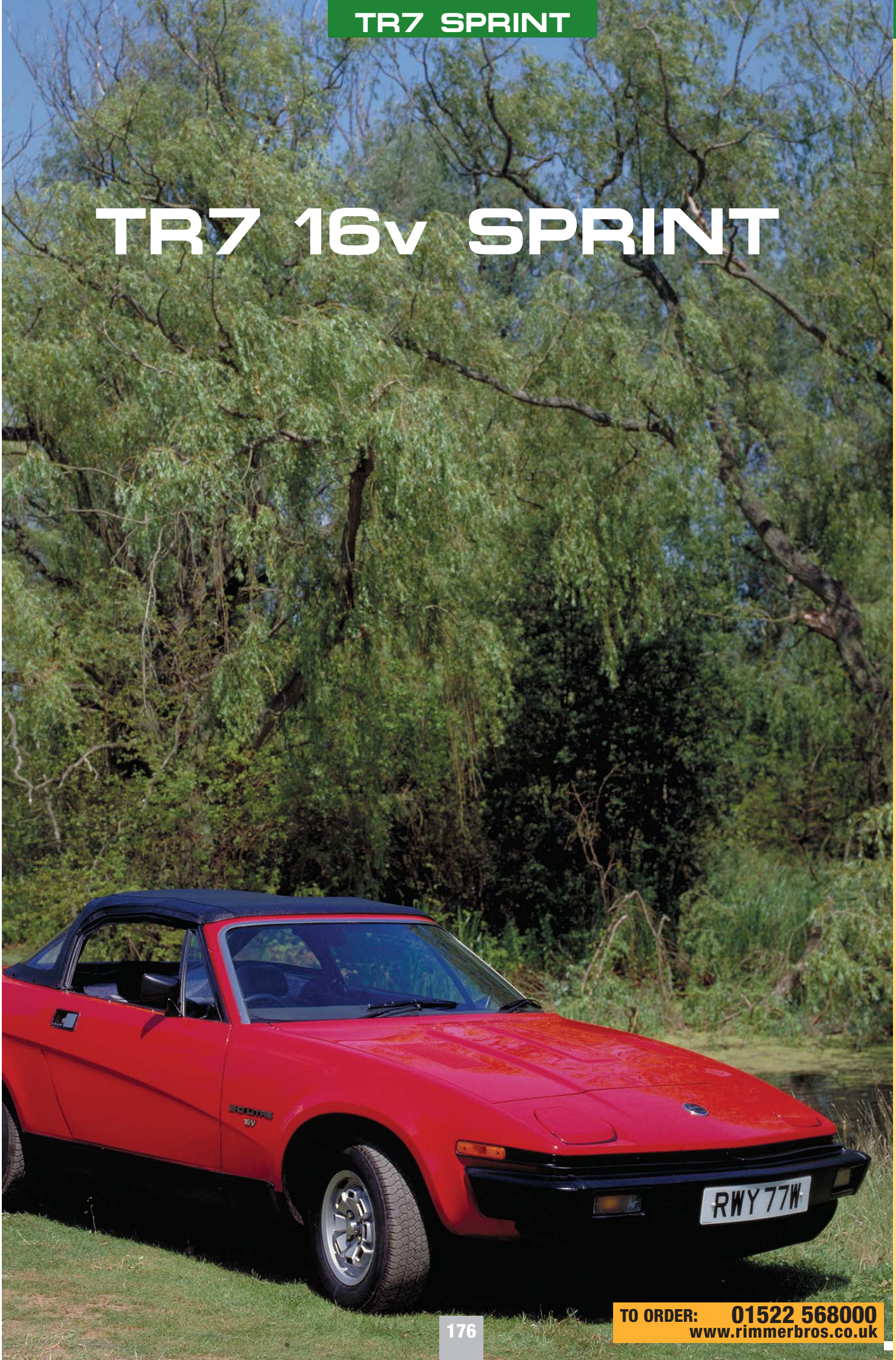

TO ORDER: 01522 568000
www.rimmerbros.co.uk

TR7 - TR7 16v SPRINT

PARTS COMPATIBILITY

The main differences between the TR7 and the TR7 16v Sprint are engine components, carburettors, exhaust, and the ignition system. The TR7 5 speed gearbox (4 speed not recommended), clutch, flywheel and engine adaptor plate along with the propshaft and rear axle can be re-used since all the mounting points are the same. The TR7 cooling system is also retained although a modification is required to the jacket plate at the rear of the Sprint cylinder head to allow a take-off for the heater. We have created a cross-reference table in the engine section which directs you to the appropriate section of either this catalogue or our Dolomite catalogue which should be obtained from us (free of charge), prior to commencing work.

Please remember, that if you have any difficulty whatsoever you only have to phone, our staff are here to help you.

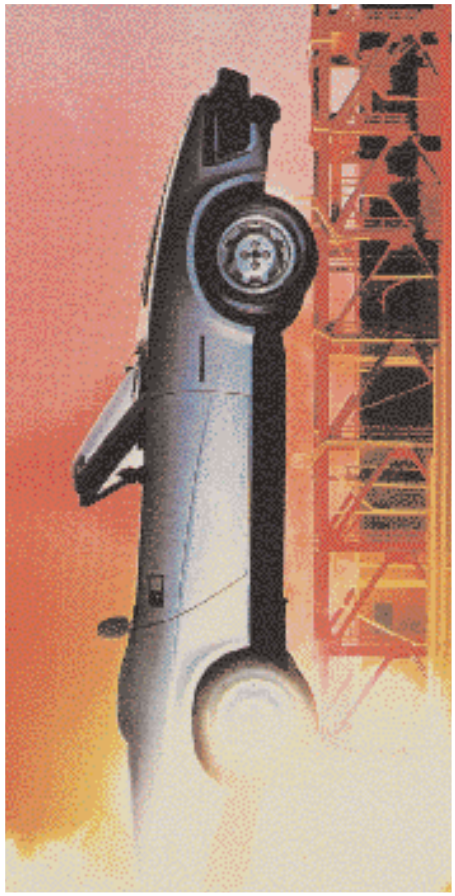

A VERY INTERESTING ALTERNATIVE!

The 16 valve Twin Carb Sprint engine was first introduced to the Dolomite range in the early 1970's. It was way ahead of its time (for a production vehicle) in terms of design and the fact there were 4 valves per cylinder. This is something we take for granted these days, but in the early 1970's, this was really something.

The unique design of the cylinder head with its ingenious single camshaft & separate rocker shaft allowed easy maintenance and was readily adapted by Leyland engineers to the slant-4 cylinder block of the 1850, which was bored out to 2 litres and fitted with high compression pistons.

When the TR7 was in early production, plans were already made to offer a 16 valve engine option. Unfortunately the 'TR7 Sprint' (as it was to be called), never went into production, although Leyland actually went to the trouble of printing an owners handbook! A few prototypes were built which 'escaped' on to the market in 1977 in coupe form. These particularly rare vehicles are readily identified by a unique cast iron exhaust manifold which has a twin vertical downpipe outlet (the Dolomite Sprint manifold exits at approximately 45°), and of course, by chassis number.

If you are looking for something a little different in 2 litre form rather than going for the 'V8' option, then you should consider converting to the 16 valve Sprint specification.

Although a popular conversion, it is not quite as straightforward as "just bolting a 16 valve Sprint head to a TR7 cylinder block" as so many people believe, in fact, there are very few engine similarities, for example;

BASIC DIFFERENCES

Between the 2 Litre '8 Valve' & 2 Litre '16 Valve' Engines

Cylinder Head	Rocker Cover (Cam Cover)
Cylinder Head Gasket	Oil Filler Cap
Rear Transfer Housing	Spark Plugs and HT Leads
Pistons	Spark Plug Tubes
Timing Chain and Sprockets	Distributor
Timing Chain Guides and Tensioner	Inlet Manifold
Timing Cover	Exhaust Manifold
Crankshaft Pulley	

However, this does not mean that the 16v conversion is difficult. It can be carried out by any competent DIY car enthusiast.

One option is to rebuild your own TR7 engine with sprint pistons, cylinder head, timing gear etc, ensuring that the 'bottom end' (crankshaft, bearings, etc) are in good order, as extra demands are made and it wouldn't take long to "finish off a tired crank". But, if you sit down and work out the cost before you start, it will probably make sense to purchase a reconditioned full engine (giving your TR7 engine in exchange).

The exhaust manifold is of particular relevance since the Dolomite Sprint manifold will not clear the TR7 bulkhead (without awkward modification to the bodywork) and because the factory TR7 sprint manifold has never been available, the only sensible solution is to fit the specially designed tubular extractor manifold - which also gives an increase in power.

You can expect an extra 25-40 BHP from the 16 Valve Sprint engine over the standard 8 valve TR7 engine, depending on whether the Tubular Extractor Exhaust Manifold is fitted or not.

While carrying out this conversion, you should also consider uprating the brakes and the suspension (springs, shock absorbers, bushes etc) to improve handling (please refer to TR7 suspension packs/kits in the main part of this catalogue for full details).

OUR TR7 16V SPRINT CONVERSION KIT MAKES IT EASY.

The easiest (and most cost effective) option is to purchase our 16v conversion kit. It contains all the basic parts & components required (but not every single nut & bolt!), including a Reconditioned Full Engine, Vented disc 4-pot uprated brake kit (14" min dia Roadwheels required), Tubular exhaust Manifold, Sports exhaust system etc. We will accept your old TR7 engine, distributor & carbs in exchange against the 16v Sprint units.

Note: *Your old TR7 (or Sprint) engine, distributor and inlet manifold/carbs is required in exchange for the units we supply in our conversion kit. Please note that some (minor) ancillary parts can be supplied as used/checked where not available new.*

IMPORTANT INFORMATION

MODIFICATIONS

If you modify your standard TR7 to TR7 16v Sprint specification by using separate components rather than using one of our 16v Conversion Kits, it is essential to uprate the Braking System. We also recommend you modify the Suspension by fitting uprated springs, shock absorbers, hard bushes etc, to improve handling. (Refer to TR7 Suspension Packs/Kits for full details).

INSURANCE

You must inform your insurance company of ANY vehicle modifications. If you have problems insuring your TR7 please contact us, we have details of insurance companies and brokers who specialise in modified and classic cars.

16V CONVERSION KIT

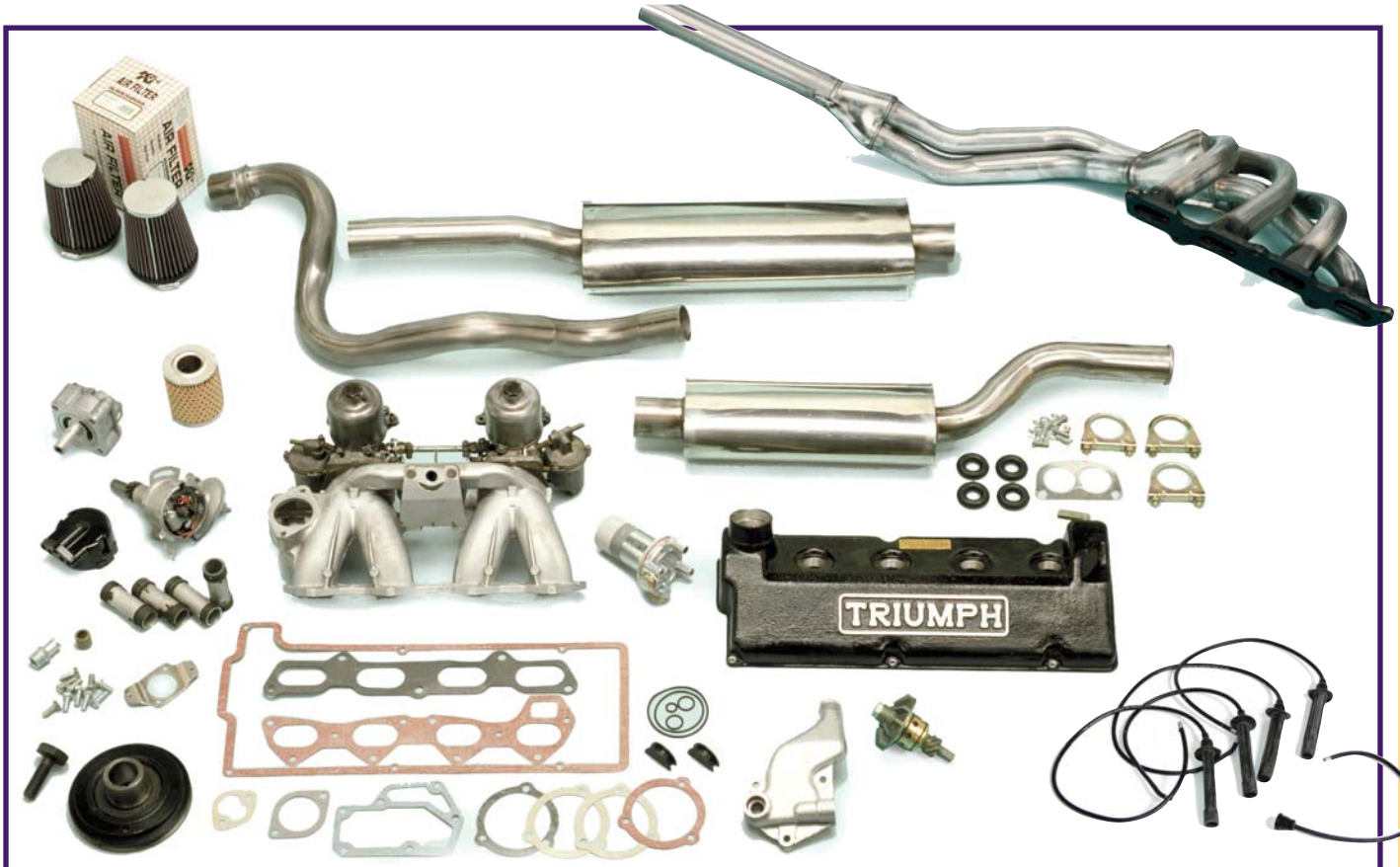

TR7 16v Sprint CONVERSION KIT

(Basic kit as listed) **Part No - RB7710**

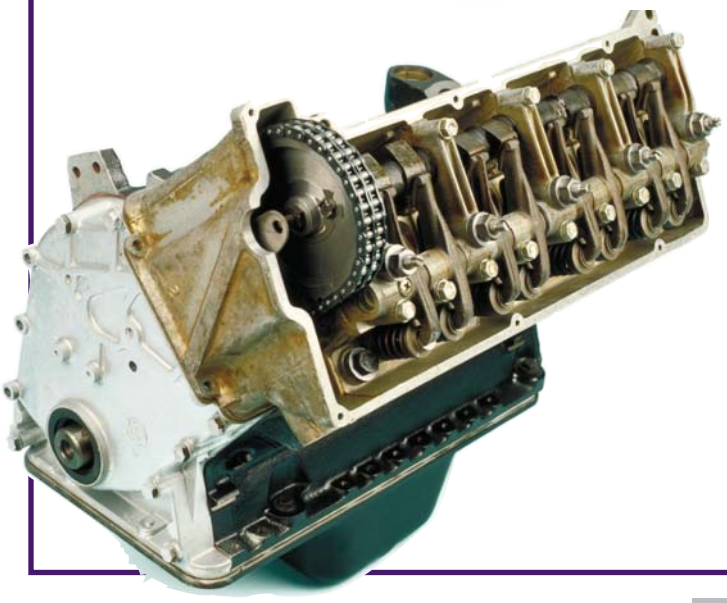

TR7 16v Sprint Conversion Kit RB7710 includes;

- Full Engine (16 valve)
  Reconditioned. Standard TR7 engine accepted in exchange.
  Note: *Engine supplied fitted with Dolomite sump.*
  Customer to refit TR7 Sump using new gasket supplied.
- New Oil Pump *(fitted)*
- New 12 Vane Water Pump & Cover
- Camshaft Cover & Retaining Screws
- Cylinder Head Water Jacket Adaptor (RB7240)
  For heater take-off. Includes Sprint head rear blanking plate, water take-off adaptor and elbow.
  Allows 90º exit for heater hose.
- Crankshaft Pulley & Bolt
- Distributor (Recon), Cap & Mounting Plate
  TR7 Distributor accepted in exchange.
- Plug Leads & Plug Tubes (New O' rings)
- Uprated ('Big') Brake Kit (RB7117)
  Includes specially adapted Rover Vitesse 4-pot calipers and special vented brake discs, pads, braided brake hoses, fittings and instructions. See page 59 for more information.
  Note: *This kit can not be used with standard 13" TR7 wheels. Minimum 14" wheels must be used for internal clearance. See roadwheels section.*
- Inlet Manifold Complete with cleaned and checked Carburettors
  TR7 manifold and carbs accepted in exchange.
- K+N Air Filters & Carb Needles
- Tubular Exhaust Manifold (Stainless Steel) & Gasket
- Stainless Steel Sports Exhaust System (RB7049)
  Including fitting kit.
- Oil Filter & all necessary Gaskets.

Note: *Some ancillary parts supplied as used/checked where not available new.*

TO ORDER: 01522 568000
www.rimmerbros.co.uk

16V ENGINES & COMPONENTS

Please request your free copy of our Dolomite Parts & Accessories Catalogue which covers all 16 valve engine components (including full and short engines).

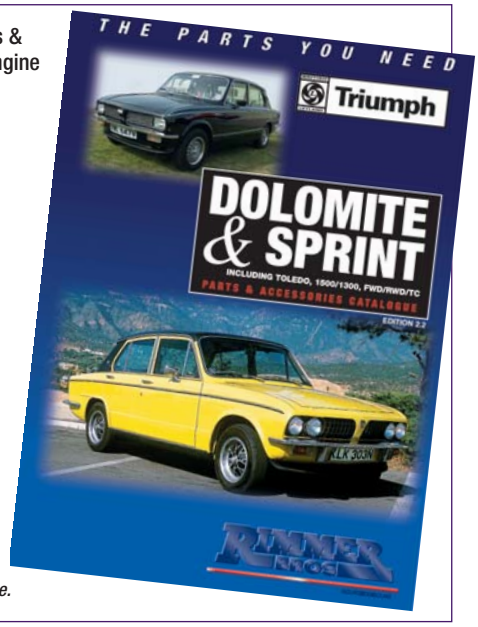

Dolomite Factory Parts Catalogue - **RTC9822CB**
A useful addition to cross reference parts to our TR7 catalogue.

CROSS REFERENCE TABLE

The following sub-sections of major components can be referred to using either this TR7 catalogue or our Dolomite catalogue as appropriate.

16V SPRINT Sub-section required	*Refer to catalogue*
FULL ENGINE	DOLOMITE
SHORT ENGINE	DOLOMITE
CYLINDER BLOCK & COMPONENTS	TR7
REAR ENGINE PLATE & OIL SEAL	TR7
SUMP PAN & DIPSTICK	TR7
CRANKSHAFT & PULLEY	DOLOMITE
FLYWHEEL	TR7
PISTONS	DOLOMITE
CONROD	TR7
OIL PUMP FILTER & SUCTION	TR7
OIL PRESSURE GUAGE	TR7
OIL COOLER KIT	TR7
SPIN-ON FILTER CONVERSION	TR7
CYLINDER HEAD & COMPONENTS	DOLOMITE
TIMING CHAIN & SPROCKETS	DOLOMITE
TIMING COVER & FITTINGS	DOLOMITE
CLUTCH	TR7
ENGINE & GEARBOX MOUNTINGS	TR7
COOLING & HEATING	TR7

TR7 (2.0 Litre) 16v Sprint Service Information

Settings & Capacities

125BHP ENGINE

ENGINE SETTINGS

Firing Order Numbered from front of engine.	1, 3, 4, 2.
Spark Plug Gap	0.024-0.026" (.61 -.63mm)
Contact Breaker Gap	0.014-0.016" (.35 -.40mm)
Dwell Angle	38° -40°
Ignition Timing (Static)	10° B.T.D.C.
Ignition Timing (Idle)	10° B.T.D.C.
Inlet Valve Clearance (Cold)	0.018" (0.50mm)
Exhaust Valve Clearance (Cold)	0.018" (0.50mm)
Idle Speed (Neutral)	650-850 RPM
Fast Idle Speed (Cold)	1100-1300 RPM
Idle Mixture (% CO)	2.5-4.5%

CAPACITIES

Cooling System; *Including Heater.*	
with Plastic expansion bottle	7.4 Litre
with Steel header tank	7.6 Litre
Engine Oil (20/50) *Including oil filter.*	4.5 Litre
Gearbox;	
4 Speed (EP90)	1.1 Litre
5 Speed (ATF)	1.5 Litre
Automatic (ATF) *Inc Torque Convertor & Oil Cooler.*	6.96 Litre
Rear Axle;	
4 speed/Early Auto (EP90)	1.3 Litre
5 speed/Late Auto (EP90)	1.1 Litre

TYRE PRESSURES - Standard 13" Wheels

(185/70 HR13 tyres)

Front (Cold)	24 Lbs Psi
Rear (Cold)	28 Lbs Psi

IMPORTANT INFORMATION

Idler Pulley

The existing TR7 fan idler pulley (UKC1626) can be fitted to the 16v Sprint timing cover (RKC776), with the 4-hole type fixing. Using the 16v Sprint idler pulley will result in the cooling fan being further back from the radiator leading to possible overheating problems when the vehicle is stationary.

SPRINT

Description	Qty Req.	Part No.

16v Inlet Manifold & Fittings

Inlet Manifold	(1)	**312431**
Gasket (Manifold to head)	(1)	**GEG683**
Setscrew (Manifold to head)	(10)	**GHF163**
Washer-Plain	(10)	**GHF301**
Setscrew	(2)	**HU754**
Washer-Spring	(2)	**GHF331**
Link/Tube Pipe	(1)	**UKC2538**
'O' Ring	(2)	**TRS1114**

16v Sprint Inlet Manifold Conversion

The inlet manifold on the 16v Sprint engine is different to the TR7, so if you carry out the conversion without using one of our TR7 16v Sprint conversion kits, it will be necessary to fit a Sprint inlet manifold complete with carbs, or, adapt your existing standard TR7 HS6 carbs to suit the Sprint manifold. This is a fairly straightforward procedure as the standard TR7 carbs will fit the Sprint manifold, but, because they sit further apart you will have to modify the linkage to suit.

Apart from purchasing a complete 16v conversion kit, the easiest option is to fit one of our TR7 Carb/Sprint Manifold sets, which come pre-assembled with TR7 carb's (checked & cleaned) mounted to a Sprint manifold, with the correct linkage. For fully reconditioned carburettors and overhaul/service items for TR7 carb's, please refer to TR7 FUEL SYSTEM. If you require overhaul components for original Sprint carbs, we stock a full range, so please phone with full details or refer to our Dolomite Catalogue.

AIR CLEANERS/FILTERS

The original TR7 air cleaner cannot be re-used in the conversion as the carburettors are spaced further apart. You can of course fit an original Dolomite Sprint air cleaner, but, to optimise the conversion we recommend you fit a pair of K&N air filters to improve engine breathing - whilst enhancing the appearance of the engine bay.

16v Carb/Manifold Conversion

For Carb Components please refer to main TR7 section or Dolomite Catalogue.

Carb & Manifold Set;
Comprises Sprint inlet manifold fitted with TR7 HS6 carbs & linkages. Carbs are cleaned & checked and sold on an exchange basis.

with Non Waxstat carb's	(1)	**RB7372**
with Waxstat carb's	(1)	**RB7372WAX**

OUR CARB/MANIFOLD SETS ARE FULLY ASSEMBLED AND READY TO FIT.

16v INLET MANIFOLD

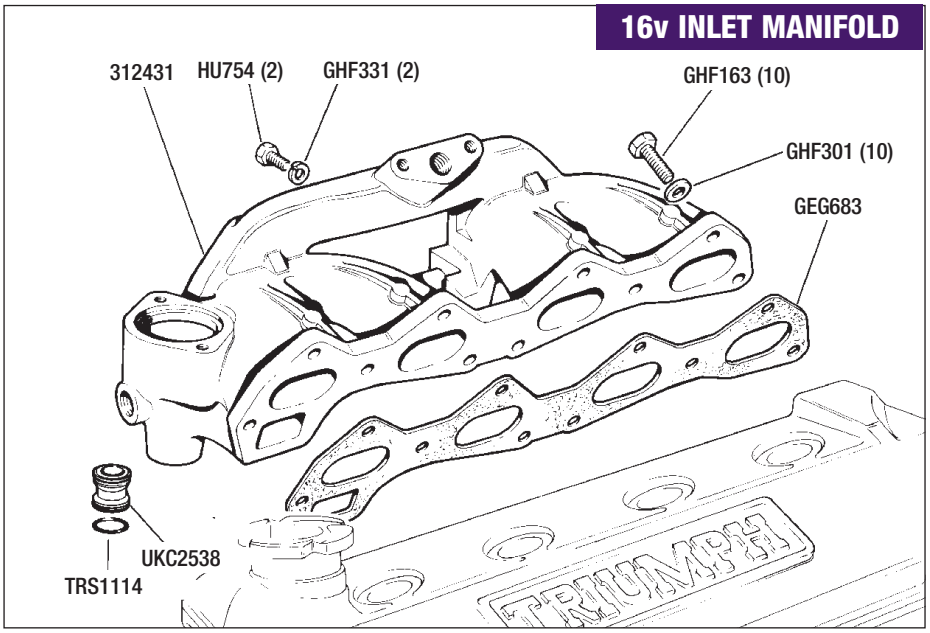

K&N FILTERS ARE RE-USABLE & HELP IMPROVE PERFORMANCE

16v K&N Air Filters

For improved engine breathing & performance.

K & N Air Filter *(each)*	(2)	**RB7070**
Cleaning Fluid *(K&N filters/1 litre)*	(a/r)	**RX1346**
Use to clean elements when servicing.		
Element Oil (K&N filters);		
Use to re-oil filter elements after cleaning.		
1fl ounce Sachet	(a/r)	**RX1347**
250ml Bottle	(a/r)	**RX1348**
400ml Aerosol	(a/r)	**RX1349**

Note: *When fitting K&N air filters and/or tubular exhaust manifold, the carb' needles may need to be changed to suit.*

CARBURETTOR NEEDLES

Carb Metering Needle;		
Use with standard exhaust manifold, & K&N air filters.		
Standard *(BDM)*	(2)	**NZX8012**
Carb Metering Needle;		
Use with tubular exhaust manifold & K&N air filters.		
TR7 HS6 carbs *(BAE)*	(2)	**CUD1104**
Sprint HS6 carbs *(BBT)*	(2)	**CUD1141**

TO ORDER: 01522 568000
www.rimmerbros.co.uk

Description Qty Req. Part No. Description Qty Req. Part No. Description Qty Req. Part No.

16V SPRINT EXHAUST MANIFOLDS & CONVERSION

The very few original TR7 16v Sprints that were produced by the factory featured a unique cast-iron exhaust manifold which had 'Twin Vertical exits' (similar to TR7), and it has never been available as a replacement part. For those people who own such a vehicle, we can supply a stainless steel downpipe that couples directly to the original manifold.

The question often asked is... "will the Dolomite Sprint exhaust manifold fit a 16v engine installed in a TR7?" - many people say yes - but, unless you modify the Lh engine bay bulkhead, it will foul in a big-way!, and because of this problem, we Do Not recommend it being used.

The most satisfactory solution (for cost, performance & fit) is the Tubular Extractor manifold, designed specifically for the 16v Sprint conversion, it will give you a respectable power increase of approximately 15 Bhp, and it will avoid any modification of the bodywork - it looks better too!

Although the tubular manifold is intended to be fitted with our Sports exhaust system (Large bore-Stainless Steel), it can be adapted to fit any existing standard exhaust system.

TR7 SPRINT EXTRACTOR MANIFOLD RB7241SS

16v Tubular Extractor Manifold

Tubular Extractor Manifold		
Stainless Steel	(1)	**RB7241SS**
Couples directly to Sports exhaust system. Fits Rhd & Lhd vehicles. Carb needles may require changing & carbs re-adjusting - see 'Fuel System'.		
Gasket-Exhaust Manifold	(1)	**RB7252**
Manifold to cyl head.		
Bolt *(Manifold fixing)*	(5)	**GHF165**
Washer-Spring *(For GHF165)*	(5)	**GHF333**

LARGE BORE STAINLESS STEEL SPORTS EXHAUST SYSTEM (RB7049) & EXHAUST FITTINGS.

16v Sports Exhaust System

Stainless Steel (Large bore)

Sports Exhaust System	(1)	**RB7049**
Couples directly to Tubular manifold. Less extractor manifold.		
Exhaust Fitting Kit	(1)	**RB7049FK**
Includes clamps, rear hanger, support rings and jointing compound.		
Adaptor Sleeve	(1)	**RB7024**
Allows sports system RB7049 to couple to factory TR7 Sprint down pipe.		

USE ADAPTOR SLEEVE RB7024, WHEN FITTING SPORTS SYSTEM RB7049 WITH ORIGINAL TR7 16v SPRINT DOWN PIPE RB7385.

EXHAUST INSULATING WRAP

Thermo-Tec exhaust insulating wrap reduces under bonnet temperatures by as much as 70%, this increases air intake and exhaust gas velocity which adds performance. Retaining the heat in the exhaust protects you from mechanical burns and it will also help to prevent under bonnet fires. Any electrical components which are close to the manifold will be less prone to heat failure, increasing their life and performance. As an added benefit, under bonnet noise is also reduced! Thermo-Tec contains no asbestos or carcinogens.

The Snap Strap Installation Kit secures Thermo-Tec exhaust insulation wrap to your tubular manifold/s. A stainless steel high temperature material designed better than hose clamps and is easier to use.

Also recommended is Hy-cote paint. This preserves and protects the exhaust wrap after installation. Extra resins and binders seal the pores, toughen the surface and help extend the life of the wrap.

Exhaust Insulating Wrap - 2" x 50'	(1)	**RX1382**
Snap Strap Exhaust Wrap Installation Kit	(1)	**RX1383**
Hy-Cote Paint, Aerosol *(400ml)*	(1)	**RX1432**
Available in black or aluminium.		

16v Standard Exhaust & Components

Down Pipe *(Stainless steel)*	(1)	**RB7385**
For Factory TR7 16v Sprints ONLY. Does NOT fit with Dolomite Sprint manifold.		
Gasket *(Downpipe to manifold)*	(1)	**GEG732**
Use with Downpipe RB7385.		
Centre Silencer (Standard);		
Mild Steel	(1)	**GEX3550**
Stainless Steel	(1)	**GEX3550SS**
Tail Pipe/Silencer (Standard);		
Mild Steel	(1)	**GEX3673**
Stainless Steel		
Standard	(1)	**GEX3673SS**
Large Bore	(1)	**GEX3673LBSS**
Exhaust Fitting Kit	(1)	**RB7015FK**
Includes clamps, rear hanger, support rings and jointing compound.		

THIS DOWN PIPE (RB7385) WILL ONLY FIT ORIGINAL TR7 16V SPRINT EXHAUST (CAST IRON) MANIFOLDS.

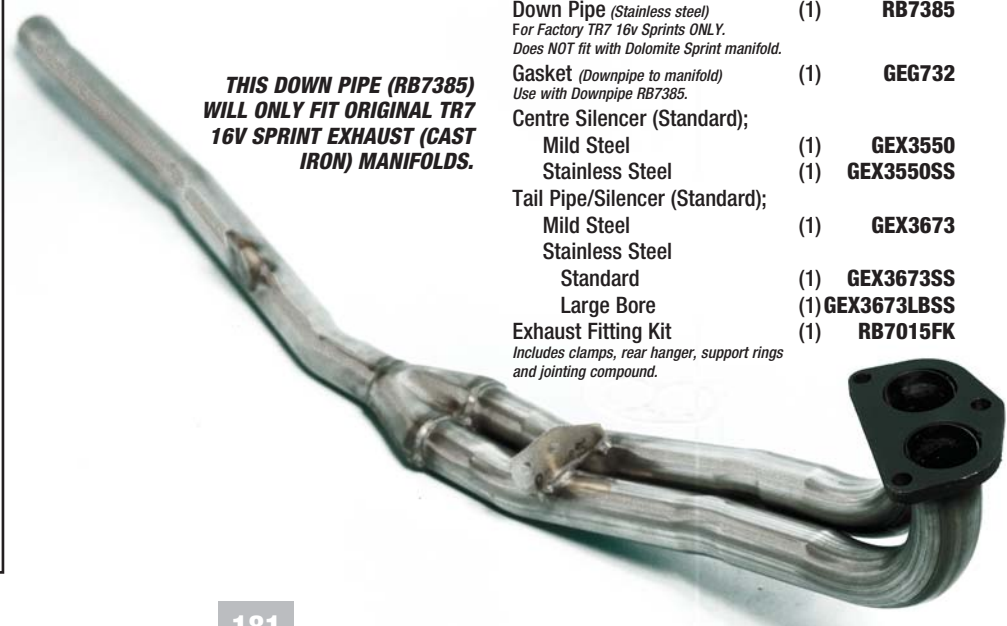

16v Engine Electrics - Ignition System

Description	Qty Req.	Part No.
DISTRIBUTOR		
Distributor *Less cap & rotor arm.*	(1)	RKC695
Distributor Cap	(1)	GDC134
Rotor Arm	(1)	GRA115
Flash/Spark Guard	(1)	RTC316
Contact Breaker Points	(1)	GCS118
Condenser	(1)	GSC118
Base Plate	(1)	RTC1496
Vacuum Unit	(1)	RTC321
Rubber Elbow *(Vacuum pipe)*	(2)	128262
Vacuum Pipe	(1)	UKC2110
Driven Gear *(Distributor)*	(1)	519595
Dowel Pin	(1)	517914
'O' Ring *(Body to block)*	(1)	517913
Mounting Plate *(To cyl block)*	(1)	RTC314
Bolt *(Distributor to block)*	(2)	GHF117
Washer-Spring	(2)	GHF331
Washer-Flat	(2)	WC701121

ELECTRONIC IGNITION KITS - REFER TO LISTINGS

ELECTRONIC IGNITION KIT;
These kits offer maintenance free ignition systems (in place of contact points), with improved performance and fuel economy.

Ignition Kit;		
Lumenition Magnetronic	(1)	RT1251
Newtronic	(1)	RT1194

PLUGS/LEADS/COIL		
Spark Plug	(4)	GSP4563
Plug Tube	(4)	156913
O' Ring only	(4)	156913RING
Plug Spanner *(Sprint original)*	(1)	TKC5627
Plug Lead Set	(1)	GHT148
Plug Lead End only	(4)	157108
Clip-Plug Lead *(Holds 4 cables)*	(1)	148673
Clip-Plug Lead *(Holds 2 cables)*	(2)	148672
Ignition Coil;		
Standard	(1)	GCL132
High Performance	(1)	GCL132HP
Ballast Resistor	(1)	134176A
Suppressor *(Ignition coil)* *Radio anti-interference.*	(1)	UKC2211
Coil Mounting;		
Setscrew	(2)	SH604051
Washer-Flat	(4)	GHF300
Washer-Spring	(2)	GHF331
Nut	(2)	GHF200

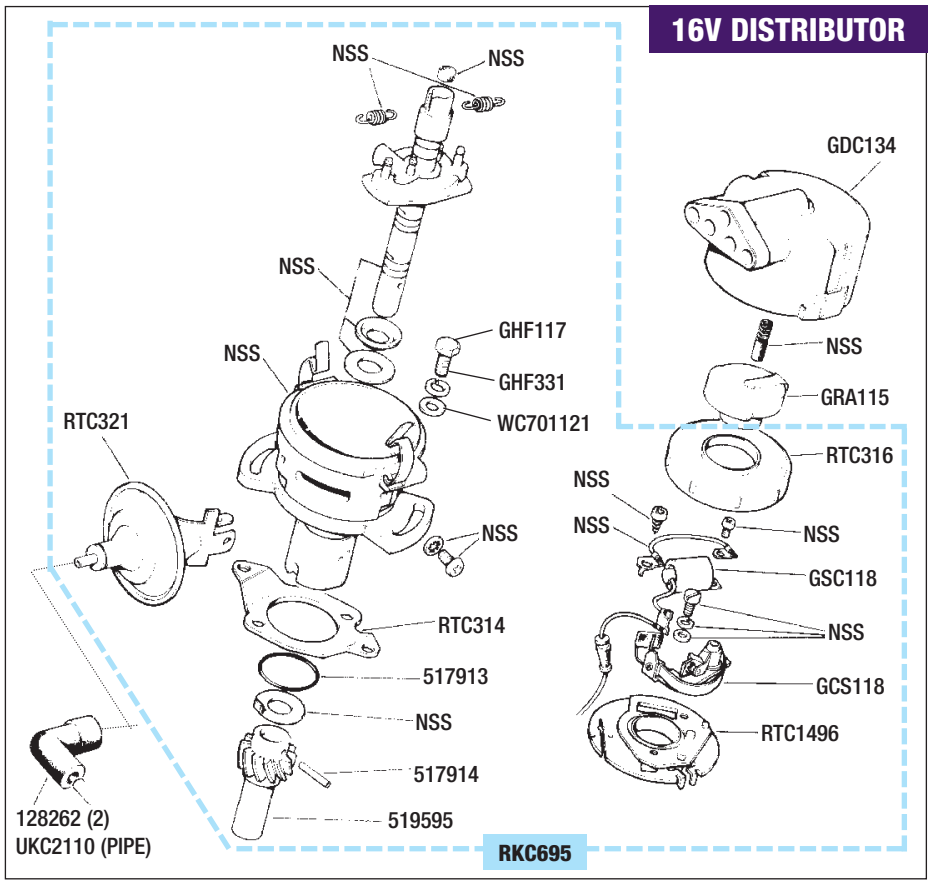

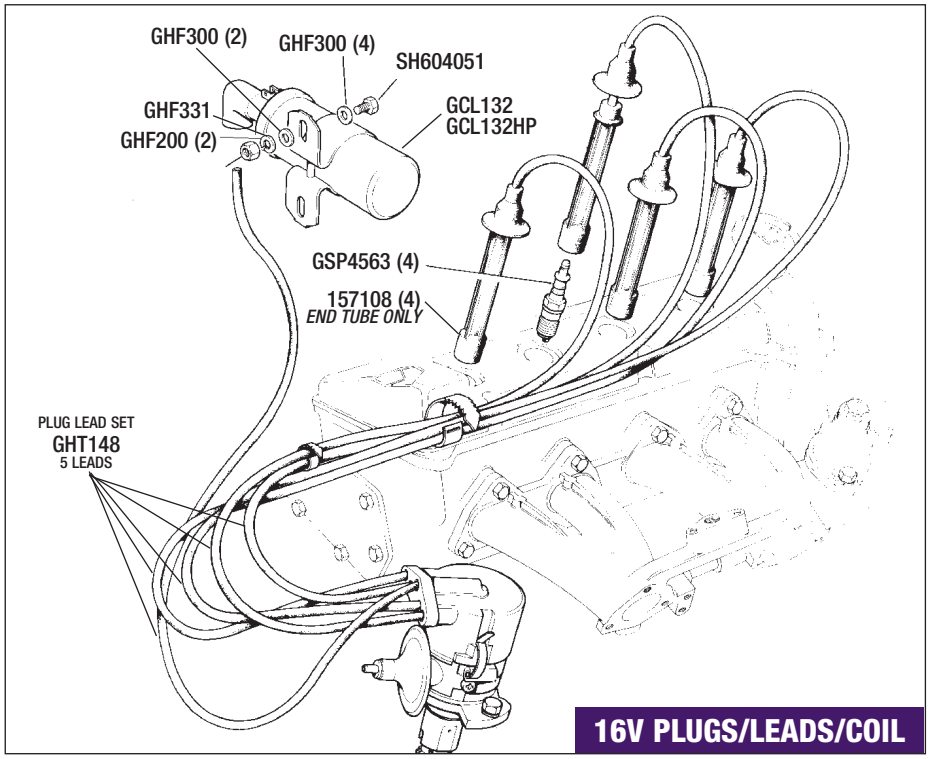

SPRINT

SPRINT PLUG LEADS (ALT) GHT148

16v Transfers

'Sprint' Transfer (Boot Lid);		
Black	(1)	RB7206Black
Gold	(1)	RB7206Gold
Silver	(1)	RB7206Silver

TO ORDER: 01522 568000
www.rimmerbros.co.uk

ENGINE

TR7 & SPRINT SPIN-ON OIL FILTER CONVERSION

This kit converts the standard 'Bowl' type Filter to the more efficient 'Spin-on' Cartridge type which makes filter changing easier & cleaner.

RECOMMENDED FOR ALL TR7 & SPRINT OWNERS!

Adaptor *TR7 & Sprint vehicles without engine oil cooler*	(1)	**RB7016**
Adaptor *TR7 & Sprint vehicles with engine oil cooler.*	(1)	**RB7048**
Oil Filter Cartridge	(1)	**RR1243**
Service kit for adaptor *Replacement O' rings.*	(1)	**RB7016SK**

TR7 & SPRINT OIL COOLER KIT

Oil Cooler Kit (TR7 & Sprint) **RB7060**
Includes radiator, hoses & fittings.
Thermostat available separately.

Thermostat **RS1456**

KENLOWE ELECTRIC FAN KIT

Kenlowe Electric Fan Kit
Not suitable for A/C vehicles.

TR7/TR7 16v (13" Fan)	**RB7065**
TR8/TR7 V8 (16" Fan)	**RS1537**

OIL PRESSURE GAUGE KIT

Oil Pressure Gauge Kit *(All models)*	**RX1351/0**
'T' Piece *Use if retaining oil pressure warning light.*	**RX1352**
Bracket *(for remote mounting of gauge)*	**RB7050**

KENLOWE ENGINE HOT START & INTERIOR PRE-HEATER SYSTEM

The ultimate in comfort & convenience: Kenlowe Engine Hotstart is a mains-powered pre-heater and coolant pump. Fitted in a convenient position in the engine bay, Hotstart rapidly heats the engine to operating temperature and holds it there, eliminating the engine wear, extra fuel costs and de-icing associated with cold winter mornings.
The Kenlowe Interior Pre-Heater, working in conjunction with Hotstart, pre-heats the car's interior (as well as demisting iced-up windows) before you even turn on the ignition, making the start of your journey safer and more comfortable.

Kenlowe 'Hotstart'
engine & interior pre-heater **RX1361**

AIR FILTER - K&N

K&N offer superior filtration, an improvement in airflow and many times longer life than standard elements. In addition, they can be cleaned and re-used. Available for both carb and Efi petrol models, they replace the original air intake box and paper element and require no alterations to the fuel system on a standard engine (with standard exhaust).
K&N filters are proven in both competition and off-road environments.

K & N FILTERS ARE RE-USABLE & HELP IMPROVE PERFORMANCE

K&N Replacement Air Filter;

TR7/TR7 Sprint *(2 required)*	**RB7070**
TR8/TR7 V8	
3500 Caburettor *(2 required)*	**RB7296**
3500 EFi	**RA1063**
3900 EFi *Larger diameter for Hotwire systems*	**RA1060**

K&N Cleaning Fluid - 1 Litre **RX1346**
Use to Clean Elements

K&N Element Oil;
Use to re-oil elements after cleaning.

1 fl. ounce sachet	**RX1347**
250 ml bottle	**RX1348**
400 ml aerosol	**RX1349**

V8 - ENGINES & PERFORMANCE PARTS

Please refer to V8 Engine Section (pages 130-150) for full details.

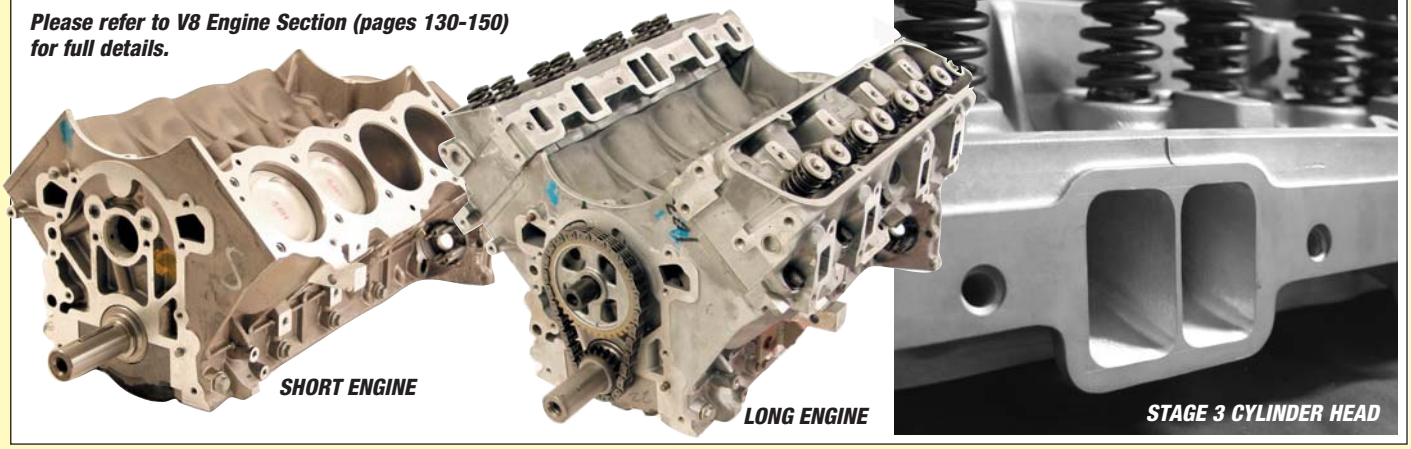

V8 SILICONE PLUG LEAD SET

V8 Silicone HT Lead Set **GHT182S**

V8 CYLINDER HEAD STUD KIT

V8 Cylinder head stud kit **RB7680**

Engine set of ARP cylinder head studs, washers and nuts toreplace original bolts. Studs improve cylinder head sealing & prevent damage to block threads.

V8 PERFORMANCE SUMP

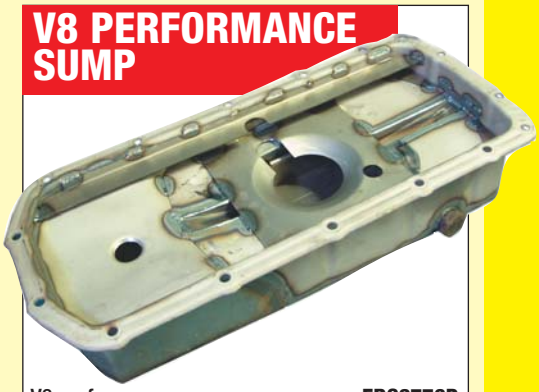

V8 performance sump **ERC2776P**

V8 OIL COOLER (ENGINE)

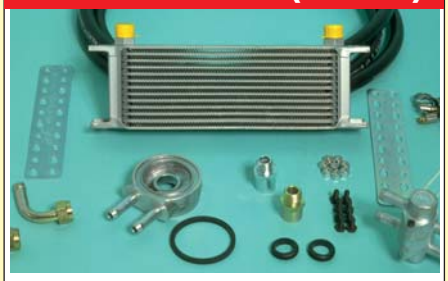

If high oil temperatures are a problem, for example when towing, the V8 engine will benefit from the fitting of an oil cooler. We recommend fitting a thermostat at the same time, to avoid overcooling.

V8 Oil cooler kit **RB7260**
Includes radiator, hoses and all fittings.

Thermostat - oil cooler **RS1456**

V8 REMOTE OIL FILTER KIT

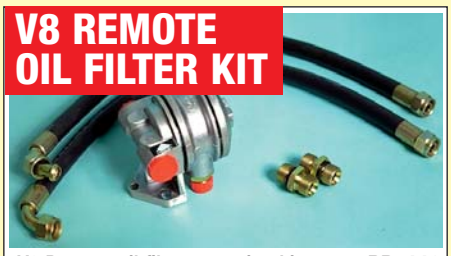

V8 Remote oil filter mounting kit **RB7116**
Allows mounting of oil filter away from engine.
Kit includes filter housing, hoses & mountings.

V8 REMOTE TAKE OFF

V8 Oil pump cover/remote take-off **RO1105**
Very low profile oil pump cover & relief valve housing for maximum clearance.
Use with remote oil filter mounting kit.

V8 - 4 BARREL CARB CONVERSION KITS

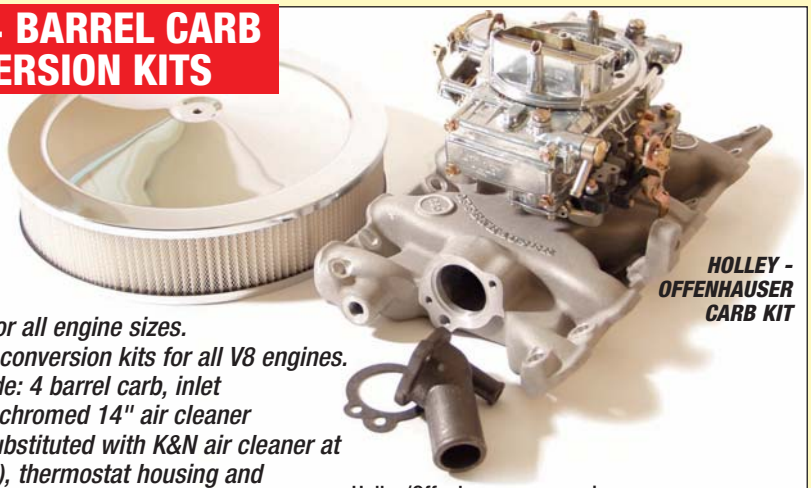

HOLLEY - OFFENHAUSER CARB KIT

Suitable for all engine sizes.
Complete conversion kits for all V8 engines.
Kits include: 4 barrel carb, inlet manifold, chromed 14" air cleaner (can be substituted with K&N air cleaner at extra cost), thermostat housing and accelerator cable kit.
See also fuel pump section for details of our Facet type electric fuel pump, which may be required in addition to the 4 barrel carb kits, depending on application.

Holley/Offenhauser conversion;
390cfm Holley carb with auto choke, Offenhauser manifold, air cleaner, thermostat housing and accelerator cable kit.

Kit 1 **RB7262**
With 3" deep air cleaner.

Kit 2 **RB7262L**
With 2" deep air cleaner for extra bonnet clearance.

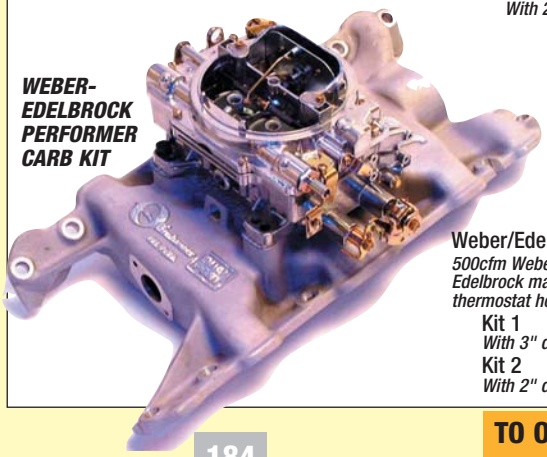

WEBER-EDELBROCK PERFORMER CARB KIT

Weber/Edelbrock Performer conversion;
500cfm Weber carb with manual choke, Edelbrock manifold, air cleaner, thermostat housing and accelerator cable kit.

Kit 1 **RA1323**
With 3" deep air cleaner.

Kit 2 **RA1323L**
With 2" deep air cleaner for extra bonnet clearance.

TO ORDER: 01522 568000
www.rimmerbros.co.uk

STAINLESS STEEL EXHAUSTS

REFER TO EXHAUST SECTIONS ON PAGE 32 (TR7), PAGE 181 (TR7 SPRINT) AND PAGE 163 (TR8) FOR DETAILS ON OUR STANDARD AND SPORTS EXHAUSTS INCLUDING TUBULAR MANIFOLD INSULATING WRAP FOR EXTRA EFFICIENCY.

POLY BUSH KITS

POLYURETHANE BUSH KITS. SEE PAGE 54 (TR7) AND PAGE 169 (TR8) FOR DETAILS.

SUSPENSION PACKAGES

SEE PAGE 53 (TR7) AND PAGE 168 (TR8) FOR DETAILS.

UPRATED FRONT & REAR ANTI-ROLL BAR KIT

SEE PAGE 53 (TR7) AND PAGE 168 (TR8) FOR DETAILS.

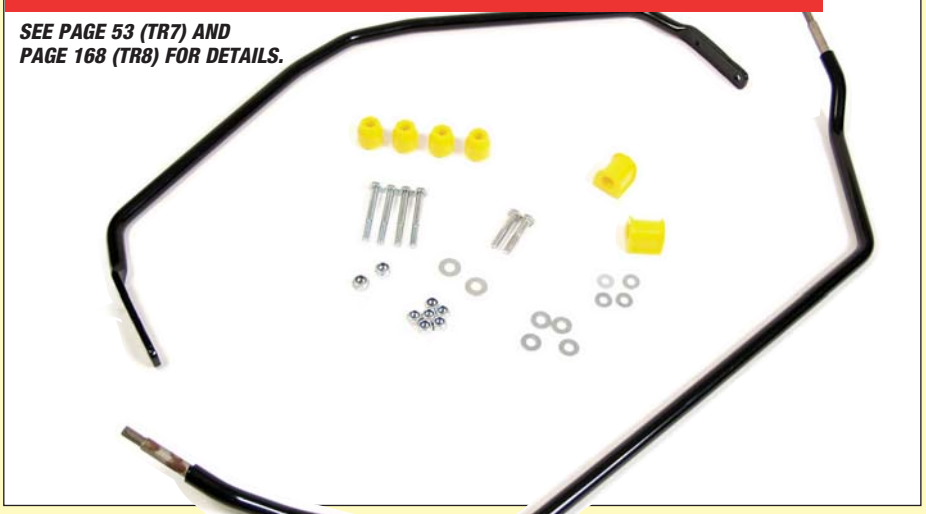

ALLOY WHEELS

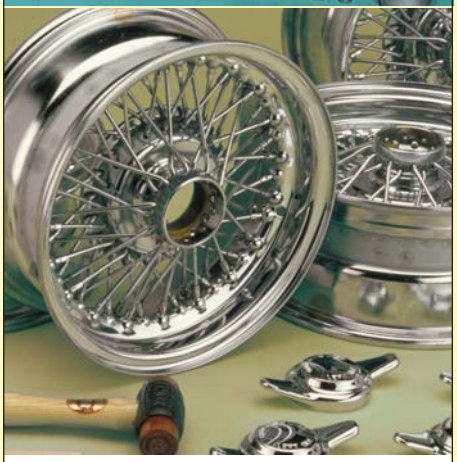

SEE PAGES 55 & 56 FOR DETAILS.

'CONCOURS' SPECIALIST WHEEL CLEANER

The 'Concours' specialist wheel cleaning system will help you care for your Classic's wheels.

Suitable for all Steel, Alloy and Wire wheels (including painted & chromed), 'Concours' wheel cleaning system uses a unique 2-stage process that not only cleans, but gives wheels a superb lasting finish that helps to protect them, making them easier to care for and clean in the future.

'Concours' Wheel Cleaning Kit **RX1405**
Kit includes; special cleaning solution (580ml), wooden handled cleaning brush & dispenser, finishing/protection solution (180ml), 2 pair of disposable gloves.

Cleaning solution breaks down brake dust & road grime. Brush & dispenser gets into all those awkward places. Finishing/protection solution leaves wheels like new.

UPRATED TR7 DISCS & PADS

If you wish to uprate your standard TR7 brakes, purchase these handed discs (lh/rh) with curved grooves and dimples to offer superb stopping power when combined with the Kevlar 'Green Stuff' pads.
See also; *'Stainless Steel Braided Brake Hoses' for a firmer brake pedal!*

Uprated Brake Discs (pair)	(1)	**TKC780UR**
'Green Stuff' Kevlar Pads		
Pads only	(1)	**GBP281GS**
Pads & Fittings	(1)	**GBP281GSK**

UPRATED BRAKE KIT

This kit is comprised of components derived from the Rover Vitesse, adapted to fit the standard TR7 4-stud hub, it includes: 2 vented brake discs, 2 large '4-pot' calipers, brake pads, 2 braided brake hoses, fittings & instructions.

Uprated Brake Kit **RB7117**

This kit cannot be used with standard 13" TR7 wheels, minimum 14" wheels must be used for internal clearance. See Road Wheels section for details of 14" Minilite (Replica) wheel sets.

See also; ***Service Items-Uprated Brake Kits***

GOODRIDGE BRAKE HOSE SET

Replace those bulging rubber flexible hoses with these stainless steel braided hoses for firmer brake pedal pressure. Kits include front & rear flexible brake hoses.

Goodridge Brake Hose - car set
All Models (3 hoses) **RB2011GR**

GOODRIDGE CLUTCH HOSE

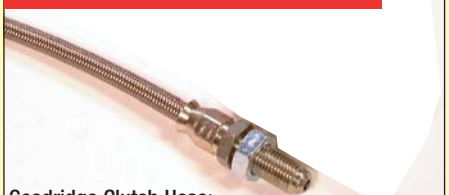

Goodridge Clutch Hose;
Fit between clutch master and slave cylinder.

TR7	
RHD	**UKC3883GR**
LHD	**UKC3882GR**
TR8 (RHD & LHD)	**UKC8455GR**

TR7 TOURING KITS

Breakdown/Touring Kits **(TR7's ONLY)**;
Kits include; *plugs, points, condenser, rotor arm, distributor cap, accelerator cable, fan belt, head gasket set, pressure cap (expansion tank), all radiator hoses, clutch master/slave cyl repair kits, and emergency bulb kit.*

Vehicles 1975-1978 **RB7079**
All ACG commission numbers fitted with Plastic expansion bottle.

Vehicles 1978 to 1979 **RB7110**
All TCG commission numbers fitted with Steel (Rh mounting) Header Tank..

Vehicles 1979 & Future **RB7123**
All vehicles from VIN 200001 fitted with Steel (Lh mounting) Header Tank.

TO ORDER: 01522 568000
www.rimmerbros.co.uk

BODY STYLING KITS

MK3 BODY STYLING KIT
RB7313

TR7 BODY STYLING

Rimmer Bros designed and introduced the first ever Body Style kit for the Triumph TR7/TR8 in 1984. In 1987 we introduced an improved kit (the Mk2) as a replacement, which has stood the test of time so well, it is still available today. Both were the result of a natural progression of improved design and fit.

The next step was to design a kit with cleaner, sharper lines, which led us to develop our Mk3 Body Style kit. However, this time we coupled 'natural development' with drawing board/styling studio techniques to create an elegant body style kit that is not only easy to install, but practical for every day use.

It is a functional, well designed kit that compliments and enhances the classic lines of the Triumph TR7/TR8 - at an affordable price.

- Top quality manufacture, easy to fit
- Excellent value for money
- Full or part kits available
- Optional rear boot spoiler
- Retains original bumpers
- Two fitment options:-
  1) Colour code and fit straight onto existing bodywork
  2) Blend panels to body (see main photo) as part of full bodywork restoration/rebuild.
- Fitting kit & full instructions supplied.

OUR MK3 BODY KIT (RB7313) INC FRONT SPOILER, REAR SKIRT, SIDE SKIRTS & WHEEL ARCHES . BOOT SPOILER (RB7223) IS OPTIONAL, AND IS PURCHASED SEPARATELY.

MK3 STYLING KIT

Full Mk3 Body Kit	**RB7313**
Kit includes front spoiler, side skirts, front/rear wheel arches, rear skirt, fitting kit, and comprehensive fitting instructions. Components supplied unpainted, 'direct from the mould'. Boot lid spoiler supplied separately. All items are also available separately.	
Front Spoiler	**RB7284**
Side Skirt	
Rh	**RB7285**
Lh	**RB7286**
Wheel Arch Set *(Front/Rear)*	**RB7287**
Rear Lower Skirt	**RB7288**
Boot Lid Spoiler	**RB7223**
This optional boot lid spoiler has been designed to compliment our Mk3 body kit, but will look great on any TR7/TR8. Supplied in 'from the mould' finish.	

MK2 BODY STYLING KIT
RB7212

MK2 STYLING KIT

Full Mk2 Body Kit	**RB7212**
Kit includes front spoiler, side skirts, rear skirt, fitting kit, & instructions. Components supplied unpainted, 'direct from the mould'. All items are also available separately.	
Front Spoiler	**RB7242**
Side Skirt	
Rh	**RB7243**
Lh	**RB7244**
Rear Lower Skirt	**RB7245**

Our ever popular Mk2 Body Style kit offers good value for money. It is a good looking and extremely well manufactured kit, that is strong and durable, but yet easy to fit.

- Fitted in hours
- Excellent value for money
- Retains original bumpers
- Includes fitting kit
- Strong and practical
- Full or part kits available
- Body filler not required
- Full instructions supplied

FRONT SPOILERS

REAR SPOILER

FLARED WHEEL ARCHES

OUR 'RALLY' TYPE FLARED WHEEL ARCHES WILL COMPLIMENT ANY TR7/TR8, AND WILL KEEP YOU 'LEGAL' IF YOU INTEND TO FIT WIDE-BOOT WHEELS & TYRES!

ALEY ROLL BAR

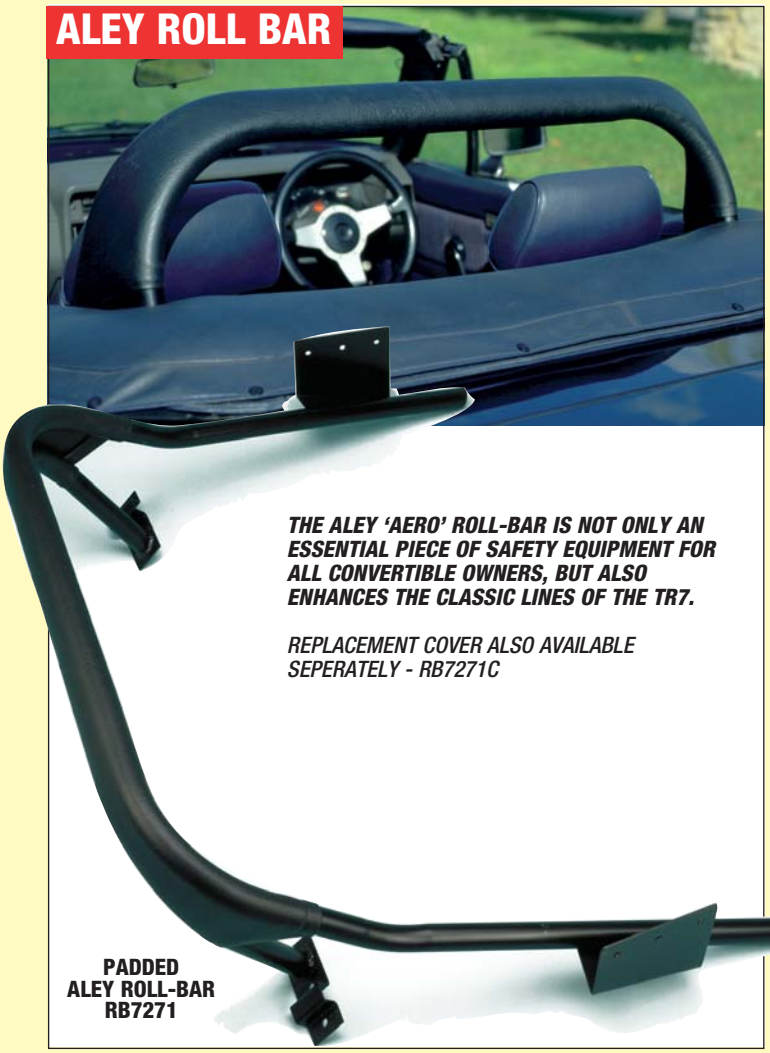

THE ALEY 'AERO' ROLL-BAR IS NOT ONLY AN ESSENTIAL PIECE OF SAFETY EQUIPMENT FOR ALL CONVERTIBLE OWNERS, BUT ALSO ENHANCES THE CLASSIC LINES OF THE TR7.

REPLACEMENT COVER ALSO AVAILABLE SEPERATELY - RB7271C

PADDED ALEY ROLL-BAR RB7271

WIND DEFLECTOR

Do you enjoy driving with the hood down?
If so, then enhance your motoring pleasure with this wind deflector. A simple device, easily fitted behind the seats, it effectively stops the buffeting you receive from air being forced back into the cabin - year round open top driving is suddenly an option! Easy to fit & remove.

Wind Deflector **RB7679**

FRONT BODY PROTECTOR

HELP PREVENT STONE CHIPS

You can protect your treasured TR7's front bodywork panels from flying stone damage by fitting our Front Body Protector (with embossed logo). Fitted in a just few moments with stretch rubber/clip fasteners that will not damage your paintwork.

Front Body Protector **RB7300**
Not recommended for use in damp conditions.

TO ORDER: 01522 568000
www.rimmerbros.co.uk

MUDFLAPS

Mudflaps-Front (Plain) *(Pr)*	**RB7282**
Fitting Kit *(Front)*	**RB7267**
Mudflaps-Rear (TR7) *(Pr)*	**RB7292**
Mudflaps-Rear (TR8) *(Pr)*	**RB7302**
Fitting Kit *(Rear)*	**RB7277**

SEAT OVER COVERS

Tailored Seat 'Over' Covers;
Sold in pairs only.

Black	**RB7099Black**
Grey	**RB7099Grey**

TOWBAR

Tow Bar *(Less ball & electrics)*	**RB7182**
Tow Ball *(50mm)*	**GTT101**
Tow Ball Cover	**GTT308**
Electrics Kit *(Universal)*	**RTC3834AA**

FOOTWELL OVERMATS

TR7 Tailored Overmats - Pair *(Front)*;
Made from a Tough Luxury 'Velour' type material, with sewn-in emblem, for RHD & LHD Vehicles.

Black Mats	**RB7289Black**
Beige Mats	**RB7289Beige**
Blue Mats	**RB7289Blue**
Grey Mats	**RB7289Grey**

TR7/8 Rubber Overmats - Pair *(Front)*;
Tough Rubber mats.

Black Rubber	**RB7289BR**

TR8 Tailored Overmats - Pair *(Front)*;
Made from a Tough Luxury 'Velour' type material, with sewn-in emblem, for RHD & LHD Vehicles.

Black Mats	**RB7305Black**
Blue Mats	**RB7305Blue**
Beige Mats	**RB7305Beige**
Grey Mats	**RB7305Grey**

TR7/8 Rubber Overmats - Pair *(Front)*;
Tough Rubber mats.

Black Rubber	**RB7289BR**

SILL KICK PLATES

Door Sill Kickplates *(pair)* **RL1067**
Stainless Steel with logo.

LOCKING PETROL CAP

Locking Petrol Cap **RB7066**
Small type. Fits 1978 onwards (from ACG25001).

MOBILE FRIDGE/ TRAVEL COOLER

Ideal for keeping food and drinks cool in the summer! Simply plugs into cigar lighter. Fantastic value.

Mobile Fridge/Travel Cooler **RX1540**

BULLET DOOR MIRROR

BULLET STYLE DOOR MIRROR (CHROME) GAM105

LEATHER SEAT COVERS

SEE PAGE 108 FOR DETAILS ON LEATHER FACED SEAT COVER KITS

BOOT RACK

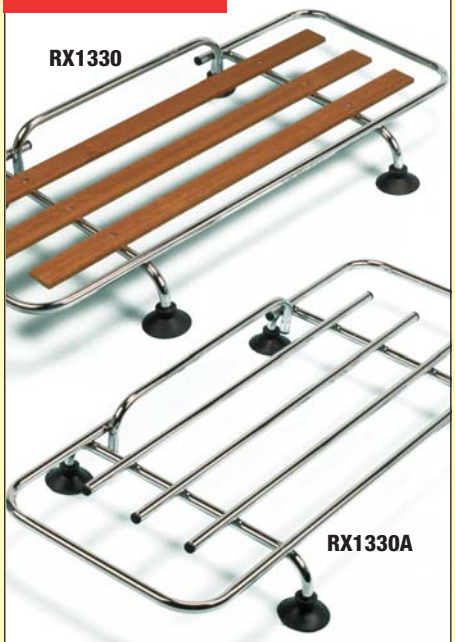

RX1330

RX1330A

OUR BOOT RACKS ARE EASY TO FIT & REMOVE AND WILL COME IN HANDY WHEN SHORT OF LUGGAGE SPACE.

COMPETITION TYPE HARNESS

A popular alternative to standard seat belts - these really do look the part!
The 4-point harness shown (no. 1) can be converted to the 6-point type by the inclusion of the crotch strap listed (no. 2). Note that fittings (eye bolts, reinforcement plates & bolts/spacer sets) are supplied separately. Harnesses are supplied singularly in 2" wide red webbing (black or blue webbing supplied to special order). This harness is designed for road use - please contact us if you have specific FIA/RAC approved type requirements.

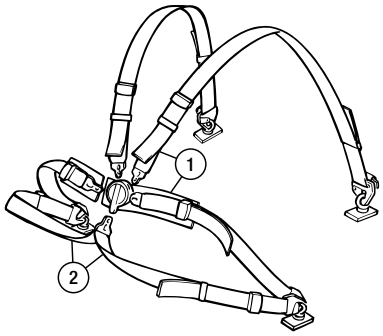

		Qty Req	
1	HARNESS, competition type, red (each)	(2)	RX1500
2	CROTCH STRAP, red (each)	(2)	RX1501
3	SHOULDER PADS, 'Securon' (pair) *available in red or black*	(2)	RX1502
4	EYE BOLT SET (pair)	(2)	RX1503
5	REINFORCEMENT PLATE SET (pair)	(2)	621112
6	BOLT & SPACER SET (pair)	(2)	RX1505

STEERING WHEELS

ORIGINAL TR8 SPECIFICATION MOTO-LITA WHEEL PKC1295BLACK

ORIGINAL TR8 SPECIFICATION MOTO-LITA WHEEL PKC1295BLUE

MOTO-LITA WOOD RIMMED WHEEL RB7698

MOTO-LITA LEATHER RIMMED WHEEL RB7699

MOUNTNEY WOOD-RIMMED SPORTS WHEEL RL1467

TO ORDER: 01522 568000
www.rimmerbros.co.uk

ELECTRICAL

POWER SOURCE INVERTER

Great for in car entertainment and leisure use!

Power Source Inverter
A power source inverter converts car battery voltage (12v) into a 240v output.
You can plug in a variety of mains voltage appliances into the standard UK socket.
Three different inverters are available to suit a range of power requirements.
There is overload, overheat and short circuit protection on all models.

150 WATT MODEL **RX1551-150**
Continuous power: 150w. Peak power: 300w
Cigar lighter plug connection. 15A fuse.
Suitable applications: TV, DVD, Video, Computer Consoles, Lights (not fluorescent) Phone charger etc.

300 WATT MODEL **RX1551-300**
Continuous power: 300w. Peak power: 660w
Cigar lighter or battery clip connection. 40A fuse.
Suitable applications: as 150w model plus small power tools, small fridges, stereo etc.

500 WATT MODEL **RX1551-500**
Continuous power: 500w. Peak power: 800w
Battery clip connection only. 70A fuse.
Suitable applications: as 300w model plus medium power tools, colour TV's with DVD's, battery chargers etc.

BATTERY ISOLATER SWITCH

Battery isolator switch **LL1171**
Essential for off-road competition, this isolator switch is simple to fit and features removeable key.

UPRATED HI-TORQUE STARTER MOTOR

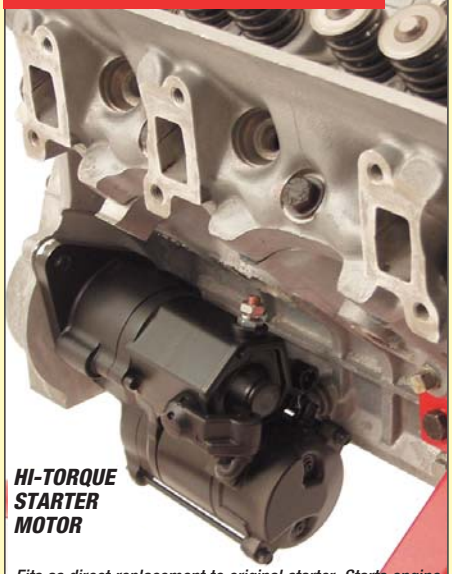

HI-TORQUE STARTER MOTOR

Fits as direct replacement to original starter. Starts engine regardless of compression or temperature. Up to 200% more cranking power using up to 50% less current.

Uprated Hi-torque Starter Motor
Outright sale, no exchange.

TR7	**GEU4471UR**
TR8/TR7 V8	**GXE4442UR**

BATTERY CONDITIONER & CHARGER

The battery charger that turns on and off, automatically.
Suitable for all 12 volt batteries (from 5AH to 100AH), this superb product constantly revitalises the battery cells - helping to extend cell life, without the danger of overcharging.

Battery Conditioner Kit **RX1410**
Comes complete with all fittings, connector kit and operating instructions.

LOOK AT THESE BENEFITS;

- Designed to be left connected for long periods.
- Use without disconnecting vehicle electrics.
- L.E.D. battery condition display.
- Thermal cut-out facility.
- 12 month guarantee.

Can also be used for these applications providing they use a 12 volt battery;
Caravans, lawn mowers, motorbikes, motor boats, wheel chairs and general leisure use.

Battery Charger (6v/12v) **GAC7106**
Standard Battery charger

ELECTRONIC IGNITION KITS

We offer Electronic Ignition Kits for all models which bring the benefits of a maintenance free ignition system (in place of contact points) with improved starting and on-road performance. Kits are available for the standard TR7, Sprint TR7 and a lumenition kit for the V8 Opus distributor, fitted from '76-'85. This kit converts the magnetic pick-up type electronic distributor to the simpler and more reliable optical triggering system.
No kit is available for the V8 35DM8 distributor (1985 on).

Electronic Ignition Kit;

TR7	
Lumenition	**RB7133**
Newtronic	**RB7168**
TR7 Sprint	
Lumenition Magnetronic	**RT1251**
Newtronic	**RT1194**
TR8/SD1-Lumenition *For 35 DE8 Opus distributor '76 - '85 only.*	
Standard Kit	**RB7323**
Performance Kit (inc coil)	**RB7323P**
P6 Rover V8 - Points Type *(to 1976)*	
Standard Kit	**RB7270**
Performance Kit (inc coil)	**RB7270P**

DIS-CAR-NECT

'Dis-Car-Nect'

Starter Immobiliser	**RX1356**
Replacement Screw Knob	**RX1356K**
Replacement Fuse	**RX1356F**

HOW DOES 'DIS-CARNECT' WORK?

When leaving your car, simply remove the knob to isolate the starter circuit. The 16amp by-pass fuse will maintain current to all other electrical circuits - stereo memories, alarm etc.
Because the starter motor draws over 150amps, any attempt to connect (hot-wire) the starter motor will instantly cause the by-pass fuse to blow, this immobilises the car until the knob is replaced. If this should happen, simply replace the 16amp fuse at your convenience.
As an added advantage, the 'Dis-Car-Nect' will also prevent battery drain if you intend to store your car, simply unscrew the knob and remove the fuse. For extra security you can unscrew and remove the immobiliser knob completely.

TRAILER BOARD

Trailer board (4') *(Including 4m cable)* **RX1513**

AIR HORNS

Air horns *(pair)* **RX1381**

STOP LAMP

High level brake/stop light **RX1298**

REAR FOG LAMP

Rear fog light/guard **RB7092**

FRONT FOG LIGHTS

Front 'Fog light' *(Supplied in Pairs)* **RX1370**
Aftermarket product.

WORK LAMPS

Portable Halogen Worklight (500w) **RX1263**
Replacement Bulb **RX1263B**
Ideal for working on you car or for jobs around the house. Inc. 240v-500w tungsten halogen lamp, 2m cable and BS plug.

Inspection Lamp/Halogen **RX1424**
Plugs into cigar lighter.

ENGINE BAY BONNET LAMP

Engine Bay Bonnet Lamp **DRC2878**

HALOGEN HEADLAMP CONVERSION KIT

Halogen Headlamp Conversion Kit;
Rhd *(with or without pilot light)* **RB7129**
Lhd *(with or without pilot light)* **RB7082**
Lhd (France) *(pilot type)* **RB7160**

XENON HEADLIGHT BULBS

Xenon Headlight Bulbs *(Supplied in pairs);*
For use with Halogen headlight conversion only.
to replace 60/55w type bulbs **GLB472X**

CRIUISE LIGHT KIT *USA STYLE*

Criuise Light Kit (USA Style) **RB7143**
Includes; 2 amber (front) & 2 red (rear) lights, bulb holders, bulbs, 2 gaskets (rear) screws & clips.
Rear Cruise Light Cover (Inside boot)
Each **XKC1093**

TO ORDER: 01522 568000
www.rimmerbros.co.uk

HI-TEMP SHRINK TUBES

These shrink tubes are already supplied with the HT lead kits listed on the next page.
They can also be used for many other applications such as an enhanced appearance to any hose or wire, bundle wires as alternative to plastic ties or protecting electrical connections.
Available in grey, black, red, blue and in 2 sizes, with a shrink ratio of 3 to 1.
Easily installed with naked flame. 18mm size shrinks to 6mm and 12mm size shrinks to 4mm.
Supplied in packs of 25.

HI-TEMP SHRINK TUBES
18mm dia x 38mm long *(Pack of 25)* **RX1468**
12mm dia x 38mm long *(Pack of 25)* **RX1469**

THERMAL HEAT SLEEVES

This high temperature sleeving will protect wiring, HT leads, hydraulic hoses and coolant hoses from radiant heat.
Two different designs are offered. The fixed tube type is designed to slide over wiring/hoses whereas the velcro type can be easily installed without having to disconnect anything. Easy to cut and shape to suit. Supplied in 3ft lengths.

FIXED TUBE SLEEVE **RX1471**
Supplied in diameters of 0.5", 0.75", 1", 1.25", 1.5" (all 3ft long)

VELCRO SLEEVE **RX1472**
Supplied in 1 size - 0.5"-1.5" diameter (3ft long).

HT LEAD & SPARK PLUG PROTECTION

Protect your HT leads and spark plugs from extreme heat and improve the appearance of your engine bay with these top quality products. Ideal for tubular extractor manifold applications where additional heat is generated, but may be fitted to a standard vehicle.

NOTE: For Manifold Insulation Wrap, refer to 'Exhausts' section in catalogue.

SPARK PLUG SLEEVES

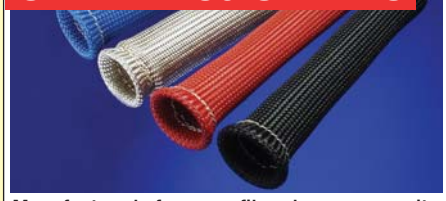

Manufactured from a fibreglass composite material (no arcing), the sleeves slide over the ends of the HT leads, easy installation. Available in silver, black, red or blue.

SPARK PLUG SLEEVES
2 cylinder kit *(Order 2 kits for 4 cylinder)* **RX1462**
8 cylinder kit **RX1463**

UNIVERSAL HEAT SHIELD

This multi-purpose heat shield can be used to protect starter motors, carbs, fuel pups, electrical boxes, instruments and hydraulic cylinders from intense heat. Easily cut to shape (scissors or knife) it attaches to itself with velcro material. Simply cut off excess material.

UNIVERSAL HEAT SHIELD
7" wide x 24" long **RX1470**

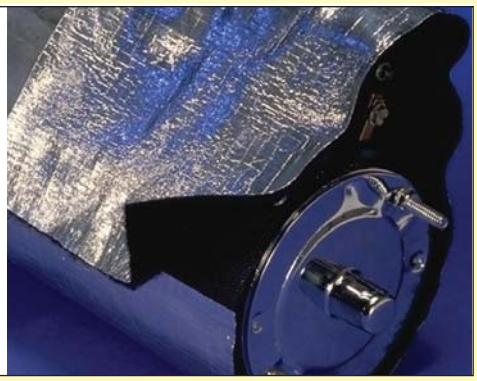

HT LEAD SLEEVES

Made from the same material as the spark plug sleeves - these easy install, snug - fitting sleeves will fit any HT lead up to 10mm in diameter.
Also included are hi-temp shrink tubes for a sharp finished appearance. Available in silver, black, red or blue.

HT LEAD SLEEVES
2 cylinder kit *(Order 2 kits for 4 cylinder)* **RX1464**
8 cylinder kit **RX1465**

HEAT & SOUND INSULATION MATERIAL

Designed for insulating floors, bulkheads, transmission tunnels and many other applications from the effects of heat, road noise, engine and transmission noise. Made from an aluminium face bonded to a 1/8" composite fibreglass insulation, then backed to an aggressive adhesive. Tough enough for under vehicle applications and harsh environments where high heat can be a problem. Can also block out up to 50% of unwanted noise. Self adhesive, can be cut with tin snips to any shape.

INSULATION MATERIAL **RX1473**

Supplied in 3 sizes: 2' x 21" (3.5sq ft), 4' x 21" (7sq ft), 4' x 42" (14 sq ft).

HT LEAD & SPARK PLUG SLEEVE KIT

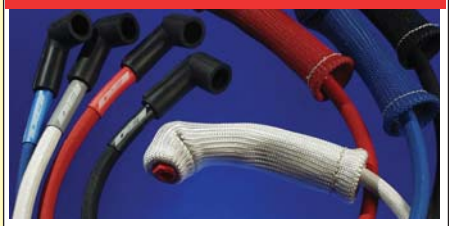

These kits comprise of both kits listed opposite in one convenient (and cost effective) kit. Colour matched sleeves available in silver, black, red or blue.

HT LEAD & SPARK PLUG SLEEVE KIT
2 cylinder kit *(Order 2 kits for 4 cylinder)* **RX1466**
Includes 7ft of HT lead sleeve, 2 plug sleeves & 6 shrink tubes.
8 cylinder kit **RX1467**
Includes 25ft of HT lead sleeve, 8 plug sleeves & 25 shrink tubes.

COOL TAPE

Consists of a 1mm aluminised material bonded to a lightweight, woven fibreglass with super strong adhesive backing. Reflects radiant heat. Limitless application, but common uses include wrapping cables, hoses, fuel lines, 'spot' heat retardation areas and sealing gaps in floors or firewalls. The best product on the market!
Flexible, strong adhesive and thin for a tight wrap.

COOL TAPE **RX1474**
Available in 13/8" x 15', 13/8" x 30' and 2" x 60' rolls

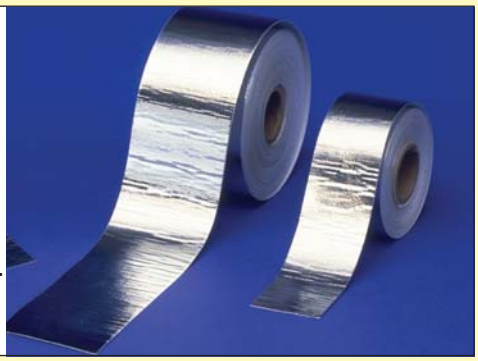

TOOLS

WATER PUMP REMOVAL TOOL (PROFFESSIONAL)

WATER PUMP TOOL (DIY)

CLUTCH ALIGNMENT TOOL

HEAD STUD EXTRACTOR

VALVE SPRING COMPRESSOR

TYRE PUMP

SPARK PLUG SPANNERS

ROAD SPRING COMPRESSOR

GREASE GUN

OIL FILTER STRAP WRENCH

V8 OIL PUMP PRIMING TOOL

Water Pump Removal Tool;	
DIY Specification	RB7009
Professional Spec	RB7009PRO
Head Stud Extraction Tool	RB7213
Valve Spring Compressor;	
TR7 & Sprint	RX12260HC
V8	RX12260HV
Spark Plug Spanner;	
TR7/TR8	GAT140
TR7 Sprint	TKC5627
Clutch Alignment Tool	
4 Speed	RX1385
5 Speed	RX1386B
Road Spring Compressor Tool	RX1328
Hood Popper Fixing Tool	RX1342
Tyre Pump *(Stirrup Type)*	523638A
Oil Filter Strap Wrench	RX1514
Carb Adjusting Tool (V8 Strombergs)	RX1222
Oil Pump Priming Tool (V8)	RX1431
Grease Gun	RX1423

TR7 VEHICLE INFORMATION LABELS

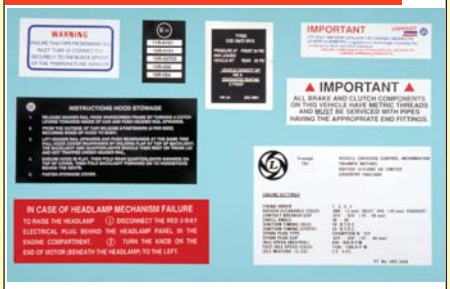

Our label kit is the ideal finishing touch for your TR7 engine bay to compliment all your hard work.

Information Label Kit	**RB7091**
Car set *includes all the following labels. They are also available separately.*	
Hood Instructions *(Convertible only)*	**RB7144**
Located on passenger sun visor.	
Engine Data Label*	**RB7201**
Tyre Pressure Data*	**RB7094**
E11 Specification*	**RB7118**
Brake Information*	**RB7150**
Unipart Requirements*	**RB7215**
Headlamps* *(Manual operation)*	**RB7186**
Air Box Label*	**RB7097**

**These labels are located in the engine bay.*

Chassis/Vin No. Plate;
Replacement blank plate. (Not included in the above kit)

Chassis No. Plate *(to 1979)*	**RB7539**
Vin No. Plate *(1979 on)*	**TKC4542**

HOOD CARE

RENOVO®

A range of products to clean, renovate and protect your hood cover, tonneau cover or hood stowage cover, whether made from vinyl, canvas or mohair material.

Vinyl Top Cleaner (500ml)	**RX1529**
Dry Cleaner Shampoo - Canvas/mohair (300ml)	**RX1530**
Soft Top Reviver - Canvas/mohair	
Available in black, blue & brown.	
500ml size	**RX1525**
1 Litre size	**RX1524**
Ultra Proofer - Canvas/mohair	
500ml size	**RX1527**
1 Litre size	**RX1526**
Ultra Proofer - Vinyl (500ml)	**RX1528**
Plastic Window Polish	
30ml size	**RX1531**
100ml size	**RX1532**

TO ORDER: 01522 568000
www.rimmerbros.co.uk

COFFEE MUG

'Triumph' Coffee Mug **RX1264**

VALVE CAP SET

Valve Cap set, Triumph **HMP190129**

DECALS & BADGES

Cloth badge 'BL Motor Sports' **HMP190078**
'Sew-on'.
Union Jack Badge;
Enamel *(30 x 50mm)* **RX1299**
Stick-on type **RX1299S**
Front Badge 'TSOA' **HMP121001**

BASEBALL CAP

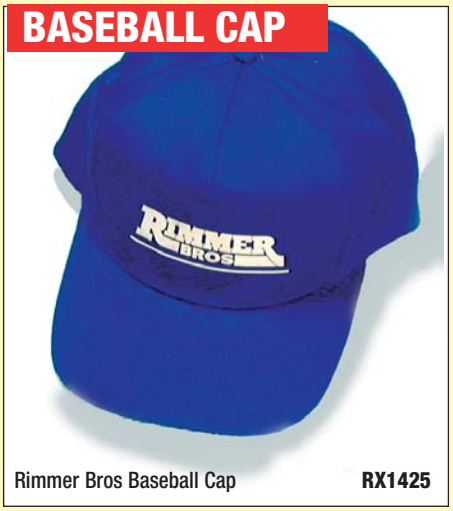

Rimmer Bros Baseball Cap **RX1425**

VOUCHERS

Rimmer Bros Vouchers - £5 **RX1337**
£10 **RX1338**
£20 **RX1339**
£50 **RX1341**

ROADSIDE TOOLS & TOURING EQUIPMENT

Towbar **RB7182**
Towball (50mm) **GTT101**
Towball Cover **GTT308**
Electrics Kit **RTC3834AA**
Lightweight (Disposable) overalls;
Ideal for those roadside repairs. Keep a pair of these very handy lightweight general purpose overalls in the boot, you never know!
Medium (approx 47" chest) **RX1408M**
Large (approx 51" chest) **RX1408L**
Extra large (approx 55" chest) **RX1408XL**

'AA' Membership & Relay Pack **RX1329**
'Warning Triangle **RX1344**
Safety Jacket (luminous) **GAC2999**
Be safe - Be seen.
Tool Bag only (for jack etc) **RX1364**
Scissor jack & handle **311346**
Wheel brace **138514**
Tyre pump (Stirrup type) **523638A**
'First-Aid' kit **RX1399**
Fire Extinguisher **GAC9904**

TAX DISC HOLDER

Tax Disc Holder *(Free of charge)* **RX1355**

DECAL

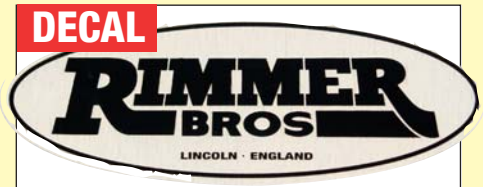

Rimmer Bros Decal (Black/Silver) **RA1055**

KEY FOBS

Key Fob (Leather)
TR7 **RB7161**
TR8 **RB7502**
V8 **RX1537**
Triumph **RM8194**

PERSONAL ORGANISER

Land Rover Personal Organiser
Superb value!
14 x 20cm (6 ring) in dark burgundy with Land Rover badge.

Binder only	**STC50440**
Binder & Diary insert	**STC50440K**

TR7 & TR8 MODEL CARS

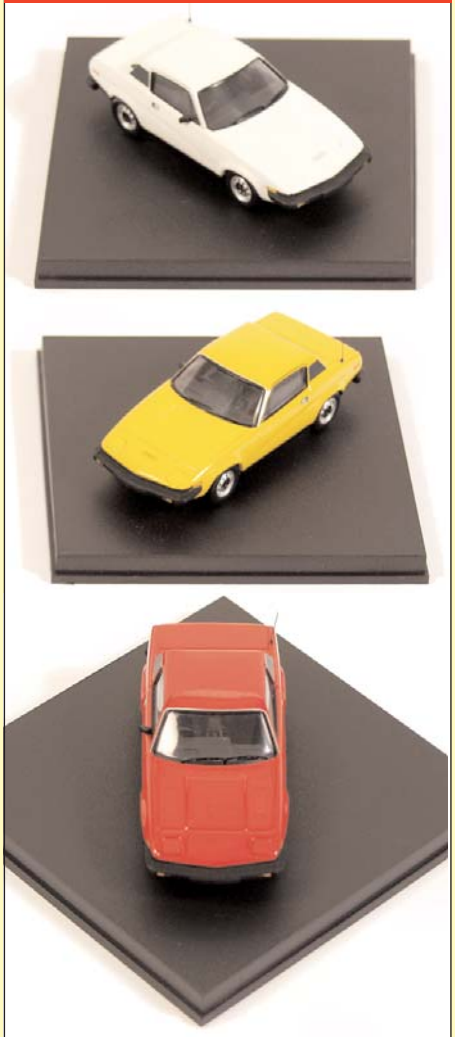

TR7/8 Model **RB7693**
Please call for latest availability on coupe/convertible, TR7/TR8, scale size and colour variants or refer to Price Guide.

LENHAM HARDTOP

A ROOF FOR ALL SEASONS

You can enjoy all-weather motoring with a Lenham hardtop. They are easy to fit and come complete with fittings. At a modest price this well designed product will increase your motoring options, and your year-round use and enjoyment of your TR7.

Lenham Hardtop **RB7239**

LENHAM HARDTOP FEATURES;

- Easy to fit & remove
- "From the mould" Grey 'Gelcoat' (unpainted) finish
- Headlining trim fitted
- TR7 heated rear screen
- Wiring & connectors included
- All fittings included

Replacement parts for Lenham Hardtops
Should you ever need to replace any glass, rubber seals, headlining or fittings, please contact a member of our sales team, who will be happy to quote for your requirements.

HARDTOP STAND & COVER

The safe & easy way to store your hardtop

The simplest solutions are usually the best, and our stand & cover system really is the best way to store, care and protect your hardtop when it's not in use.

The frame (which is powder coated), is made from high quality steel. For manoeuvre-ability it is fitted with 4 castor's (with rubber tyres) and footbrakes, and when not in use folds flat.

The protective cover - which is fitted with adjust-able securing straps & quick release buckles, is manufactured in 'Evolution4', a 4-layer breathable fabric, giving a strong outer layer and a smooth non-scratch inner lining.

The 1-piece cover also has 2 carry handles.

Hardtop Stand & Cover (Large) *Suitable for Stag, TR6, TR7 and all similar sized hardtops.*	**RX1420L**
Hardtop Stand & Cover (Small) *Suitable for Spitfire & early TR's.*	**RX1420S**
Cover only *(Available separately)*	
Large	**RX1420LC**
Small	**RX1420SC**

VEHICLE RECORD LOG & HANDBOOK WALLET

Glovebox wallet/folder **RX1421**
Look & Be Organised.
This wallet is ideal for holding your owners handbook, service/MOT log, invoices & MOT certificates.

Service/MOT record log **RX1422**
A visible service record of your classic.
Use this log book for keeping a full record of your classics service, tax & MOT dates.
Over the years the historic record will prove to any potential purchaser how you have cared for your car.

TO ORDER: 01522 568000
www.rimmerbros.co.uk

INDOOR TAILORED CAR COVERS

These quality tailored indoor car covers (with Triumph logo) are individually designed for each model to ensure a really close fit.
They are manufactured to our specification in a 'Breathable Sateen Cotton' material that is strong, but yet light in weight, making them very easy to fit. They will provide ideal protection whilst your car is in the garage - whether just parked up for a few days, or stored over the winter months - from dust, bright sunlight and from those annoying little marks when people brush past.
The covers, which are available in a choice of colours, are supplied with a matching storage bag.

Indoor Tailored Tailored Car Covers;
Available in red, blue & green.

Convertible models	**RB7251**
Coupe models	**RB7261**

OUTDOOR 'MONSOON' SEMI-TAILORED CAR COVERS

FEATURES...

- **Tough grey outer skin**
- **Soft non woven lining**
- **Double stitched with heated seams**
- **Roof vents allowing moisture to escape**
- **Under body securing straps with soft fastner covers**
- **Elasticated front & rear hems for snug fit**
- **UV resistant to prevent paint fade**
- **Complete with zipped storage bag**
- **Great value for money!**

TR7/TR8 Outdoor Car Cover **RX1517**

CAR CAPSULE

The Car Capsule eliminates the problems of dust, dirt, scratched paintwork and moisture retention, which leads to corrosion problems.

Quick and simple to use, Car Capsule is suitable for both short and long term storage.

The energy efficient low-voltage fan maintains a continuous flow of filtered fresh air passing over and through the stored vehicle.

Car Capsule stops interiors from becoming damp and musty after prolonged storage.

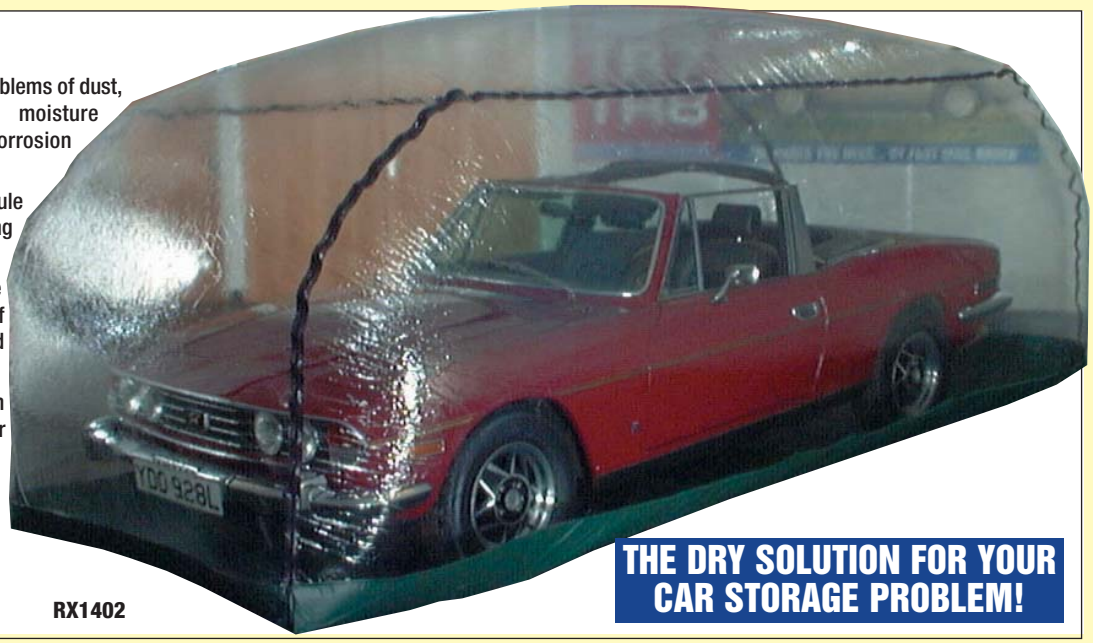

TR7/TR8 Car Capsule
(480cm x 180cm) **RX1402**

TR7 & TR8 INFORMATION BOOKS & AD PRINTS

TR7 & TR8 FACTORY PARTS CATALOGUES

PARTS CATALOGUES;

TR7 *(Early cars 1975 - 1978)*	**RTC9814CA**
TR7* *(Late cars 1979 & future)*	**RTC9828CC**
**Includes Convertible.*	
TR7 & TR8	**RTC9020B**
Includes early TR7 (Coupe only) & factory TR8 (Carburettor) models.	
Dolomite Sprint	**RTC9822CB**
Use for 16v engine only.	

TR7 SALES BROCHURES (ORIGINAL)

Sales Brochure - TR7 Convertible	**RB7283**

TR7 & TR8 OWNERS HANDBOOKS

Owners Handbooks;

TR7 *(Coupe only, 1977 - 1981)*	**AKM4332**
TR7 *(Cars 1981 & future) (Includes convertibles)*	**AKM4853**
TR7 *(USA Spec 1976)*	**RTC9209/76**
TR7 *(USA Spec 1977)*	**RTC9209/77**
TR8 *(Convertible & Coupe)*	**AKM4779**

TR7, TR8 & V8 WORKSHOP MANUALS

RTC9201

AKM3079B

RB7210

AKM3971

AKM5015

AKM5343

RO1069

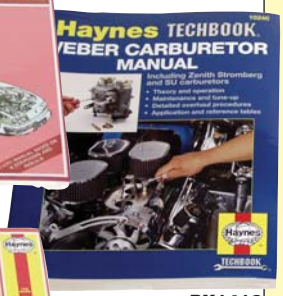

RX1412

RO1135

RD1024

Workshop Manuals;

TR7 - Factory *(Early cars)*	**RTC9201**
TR7 - Factory *(Late cars)*	**AKM3079B**
TR7 - Haynes	**RB7210**
TR8 - Factory	**AKM3971**
TR8 Repair Operation Supplement - Factory	**AKM5015**
SD1 Rover - Factory	**AKM5343**
SD1 Rover - Haynes	**RO1069**
Carburettor Manual (Haynes)	
Stromberg & Weber	**RX1412**
SU	**RO1135**
V8 Engine Overhaul Manual	**RD1024**

ADVERTISING PRINTS

RB7503

RB7504

RB7505

RB7506

RB7507

RB7508

RB7509

Reproductions of Original Triumph Adverts *as released by Triumph- British Leyland, representing adverts used World-wide.*

Blue TR7 Convertible	**RB7503**
Picture; *TR7 on rocket launch pad.*	
Caption; *TR7, 6, 5, 4, 3, 2, 1.*	
Blue TR7 Coupe	**RB7504**
Picture; *TR7 Coupe parked on chippings.*	
Caption; *"It looks like you can't afford it"*	
Silver TR7 Convertible	**RB7505**
Picture; *TR7 against skyline.*	
Caption;*93,000,000 Miles.*	
"The TR7 is now available with a little extra headroom."	
Red TR7 Coupe	**RB7506**
Picture; *Red TR7 Coupe & Red Ferrari.*	
Caption; *"Save £28,000 Today."*	
Green TR8 Convertible *(Lhd)*	**RB7507**
Picture; *TR8 with glider in background.*	
Caption; *"A little performance with your fresh air ?"*	
White TR7 Convertible *(Lhd)*	**RB7508**
Picture; *TR7 on beach and windsurfer.*	
Caption; *"TR7 Drophead-Eingesperrt sind wir ohnehin viel zu oft."*	
Green TR7 Coupe *(Lhd)*	**RB7509**
Picture; *1 side view, 1 front view.*	
Caption; *"Das profil der zukunft."*	

TO ORDER: 01522 568000
www.rimmerbros.co.uk

GENERAL MANUALS & VIDEOS

WORKSHOP MANUALS (FACTORY)

TR4/TR4A	**510322**
TR5 Pi Supplement	**545053**
TR6	**545277**
TR5/TR250/TR6 (Pocket size)	**545277HBS**
TR7	**AKM3079B**
TR8	**AKM3971**
Stag	**AKM3966**
Stag - Engine Service Manual (Pocket Size)	**RS1542**
Spitfire Mk1/2/3	**511243**
Spitfire MkIV	**545254**
Spitfire 1500;	
Hard Cover	**AKM4329HCVR**
Soft Cover	**AKM4329SCVR**
Spitfire (Pocket Size)	**RL1395**
GT6/Vitesse	**512947**
Herald	**511243**
Dolomite Sprint	**AKM3629**
Dolomite Sprint - Repair operation times	**AKM3635**
Triumph 2000/2500	**AKM3974**
SD1 (1982 on)	**AKM5343**

WORKSHOP MANUALS (HAYNES)

TR2-4A	**RF4128**
TR6	**RR1020**
TR7	**RB7210**
Stag	**RS1401**
Spitfire	**RL1222**
GT6/Vitesse	**RG1001**
Herald	**RH5194**
Triumph FWD (1965-73) Autodata	**RX1292AD**
Dolomite 1300	**RT1250**
SD1	
2000/2300/2600	**R01068**
3500	**R01069**
2300/2600/3500 (exc EFi) Autodata	**R01069AD**
Carburettor Manual *Weber, Zenith, Stromberg.*	**RX1412**
Range Rover (1970-92)	**RA1007**

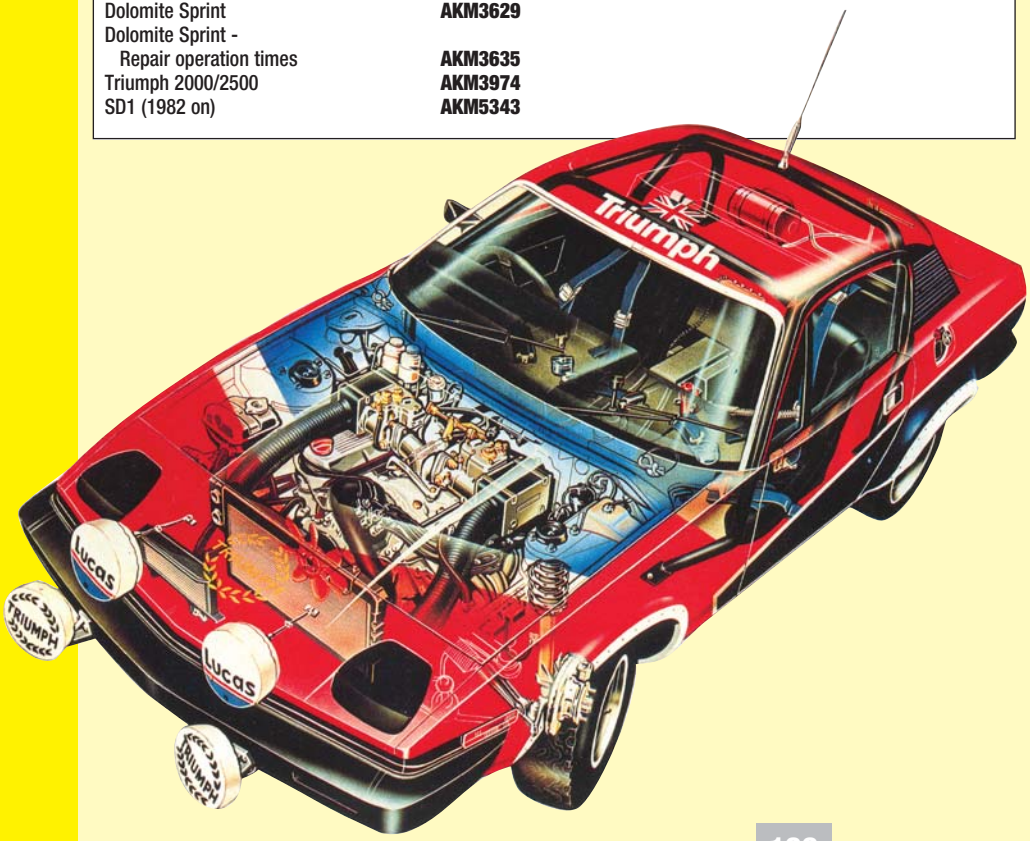

TRIUMPH VIDEOS

Produced by The British Motor Industry Heritage Trust (BMIHT), these videos are compiled from archive footage from the past and remind us of how things used to be! Very entertaining.

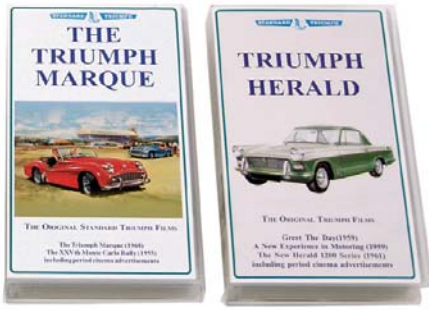

THE TRIUMPH MARQUE **RX1436**

This video shows the STANDARD-TRIUMPH film unit at its best, following the fortunes of rally and race teams, it covers the major successes of the Standards, TR's and Spitfires from 1953 to 1968 and the introduction of the TR5. Footage of the 25th Monte Carlo Rally is also included.

TRIUMPH HERALD **RX1437**

This video includes the launch of the Triumph Herald in the Albert Hall, the gruelling test journey across Africa and footage of the Canley production factory. Raymond Baxter adds the informative commentary.

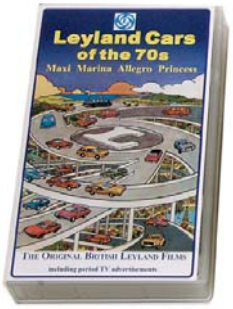

LEYLAND CARS OF THE 70's **RX1442**

A celebration of those wonderful films made to launch some famous cars of the golden years at British Leyland. Includes footage of the Maxi, Marina, Allergo and Princess. (62 minutes in total).

HAYNES OWNERS WORKSHOP MANUAL - MAN

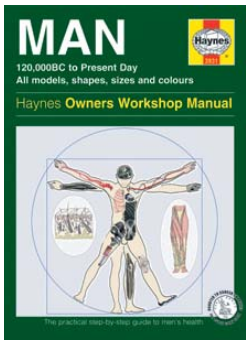

All models, shapes, sizes & colours, 120,000BC to present day. *By Dr Ian Banks. 128 pages.*

The practical step-by-step guide to men's health. Not a motoring manual, but a health manual presented in the style of a Haynes car repair guide! Covers basic health advice and 'trouble-shooting' with text and illustrations. Men are far more likely to look after their cars than their own bodies! Reading this could mean the difference between a healthy, high mileage life and premature breakdown.

'Man' Haynes Manual **RX1534**

GENERAL PARTS CATALOGUES & HANDBOOKS

PARTS CATALOOGUES - 'BRITISH LEYLAND'

TR2/3	**501653SC**
TR4	**510978**
TR4A	**514837**
TR250	**516914**
TR5	**516915**
TR6 (to 1973)	**517785A**
TR6 (1974 to '76)	**RTC9093A**
TR7 (1975 – 78)	**RTC9814CA**
TR7 (1979 on	**RTC9828CC**
TR7/8 (to '79)	**RTC9020B**
Stag	**519579**
Spitfire ('4' Mk1 & Mk2)	**511682**
Spitfire (Mk3)	**516282**
Spitfire 1500 (Late)	**RTC9819CB**
GT6 (Mk1 & Mk2)	**515754**
GT6 (Mk3)	**520949A**
Herald (1200 – 12/50)	**510597**
Herald (13/60)	**517056**
Vitesse (1600/2000 Mk1)	**511408**
Vitesse (2 Litre Mk2)	**517786**
Dolomite (All Models)	**RTC9822CB**
Triumph 1500 (RWD)	**RTC9019A**

OWNERS HANDBOOK

TR4	**510326**
TR4A	**512916**
TR250	**545033**
TR6	**545078**
See catalogue for full listings	
TR7 USA (1977)	**RTC9209-77**
TR7 (Coupe 77–81)	**AKM4332**
TR7 ('81 on inc. conv.)	**AKM4853**
TR8	**AKM4779**
Stag	**545105**
Spitfire Mk3	**545017**
Spitfire MkIV	**545220**
Spitfire 1500	**RTC9221**
Spitfire 1500 (USA)	**AKM4544**
GT6 (Mk1)	**RG1293**
GT6 (Mk2)	**545057**
GT6 (Mk3)	**545186**
Herald (1200 & 12/50)	**512893**
Herald (13/60)	**545037**
Vitesse (1600 Mk1)	**511236**
Vitesse (2 Litre Mk1)	**545006**
Vitesse (2 Litre Mk2)	**545070**
Dolomite Sprint	**545601**
Triumph 2000/2500	**AKM3617**
SD1 - *Refer to catalogue*	

TO ORDER: 01522 568000
www.rimmerbros.co.uk

GENERAL REFERENCE & INFORMATION BOOKS

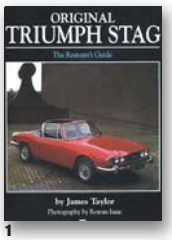

1

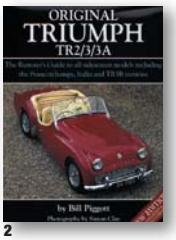

2

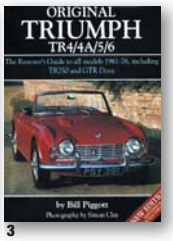

3

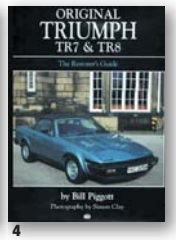

4

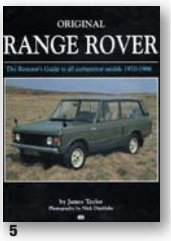

5

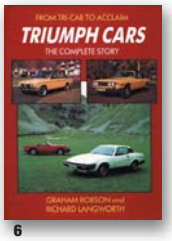

6

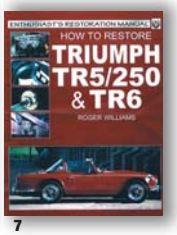

7

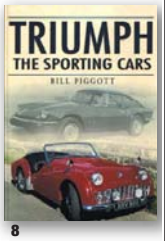

8

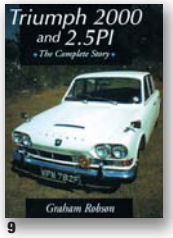

9

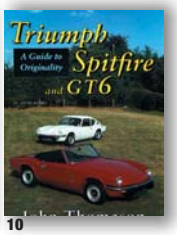

10

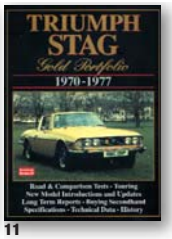

11

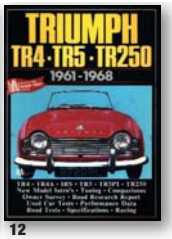

12

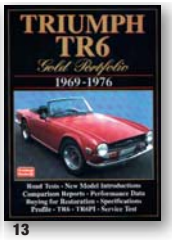

13

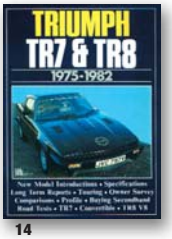

14

15

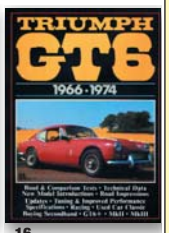

16

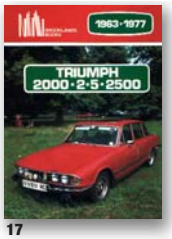

17

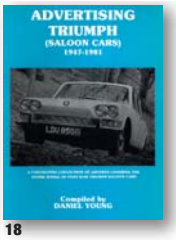

18

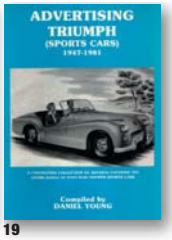

19

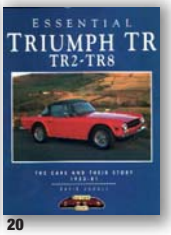

20

21

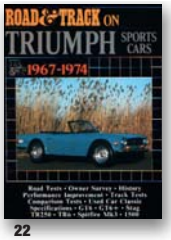

22

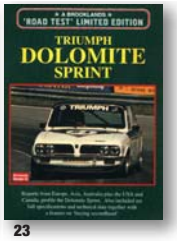

23

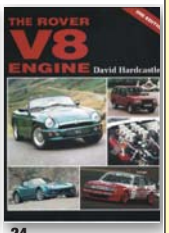

24

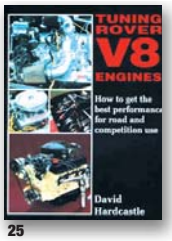

25

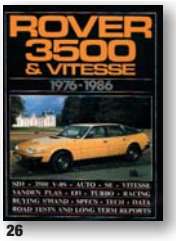

26

27

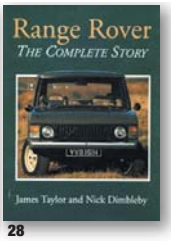

28

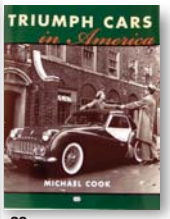

29

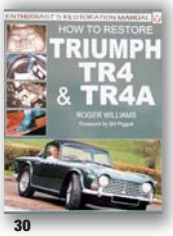

30

31

32

33

34

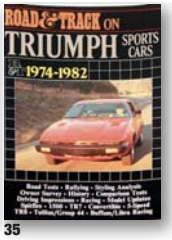

35

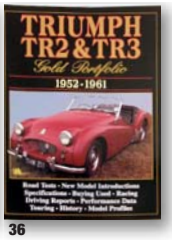

36

37

38

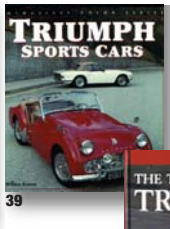

39

40

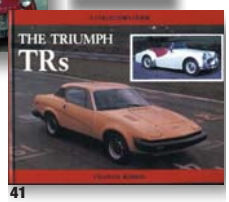

41

42

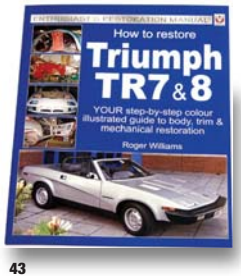

43

1 Original Triumph Stag - 'Restorers Guide' **RS1694**
(James Taylor). 96 pages. 190 colour photos.

2 Original TR2/3/3A **RF4125**
(Bill Piggot) 128 pages

3 Original Triumph TR4/4A/5/6 **RX1294**
(Bill Piggot) TR4/5/6 112 pages

4 Original Triumph TR7 & TR8 **RB7688**
(Bill Piggot) 128 pages. 200 colour photos

5 'Original' Range Rover (1970-86) **RA1226**
(James Taylor)

6 Triumph Cars: The Complete Story **RX1388**
(Robson & Langworth). 352 pages

7 How to restore - Triumph TR5/250 & TR6 **RX1497**
Paperback, 192 pages with over 300 photographs and illustrations.

8 Triumph - The Sporting Years **RX1428**
(Bill Piggot) 160 pages

9 2000/2.5Pi The Complete Story **RM8221**
(Robson) 200 pages

10 Spitfire/GT6 Informative Guide to Origins **RL1479**
(By John Thomason) 158 pages

11 Stag Portfolio* **RS1525**

12 TR4/5/250 Road & Track **RF4114**

13 TR6 Portfolio* **RR1325**

14 TR7/8 Gold Portfolio* **RB7207**

15 Spitfire Portfolio* **RL1390**

16 GT6 Portfolio* **RG1140**

17 2000/2500 Road Test Book **RM8226**
(Brooklands) 100 pages
Advertising Triumph –1947-1981
(Daniel Young). 96 Pages.

18 Saloon Cars **RX1304**

19 Sports Cars **RX1303**

20 Essential Triumph TR2 – 8 **RX1357**
(Bayview Books). 80 pages

21 Triumph TR's: The Complete Story **RX1296**
(Robson). 192 pages

22 Triumph Sports Cars – 1967-74 **RX1269**
(Road & Track) 90 pages

23 Dolomite Portfolio* **RT1227**
**Road Tests/Spec's, Performance Data, new model instructions, long term reports, rallying, touring, plus buyers guide.*

24 The Rover V8 Engine **RX1429**
(David Hardcastle) 208 pages.

25 Tuning Rover V8 Engines **RX1430**
(David Hardcastle) 208 pages.

26 SD1 - Road Test Book *100 pages.* (3500 & Vitesse 1976-86) **R01070**

27 Range Rover - Purchase & Restoration Guide **RA1070**
(David Pollard)

28 Range Rover - The Complete Story **RA1319**
(James Taylor)
Note: refer to Range Rover catalogue for other titles.

29 Triumph Cars in America **RX1506**
(Michael Cook)

30 How to Restore TR4 & TR4A **RX1509**
(Roger Williams) 192 pages. Soft cover.

31 SD1 - The Complete Story **R01129**
(Karen Pender) 192 pages.

32 Practical Classics on Herald & Vitesse Restoration **RH5300**
(Brooklands). 76 pages.

33 Triumph Herald 59-71 Road Test Book **RH5299**
(RM Clark - Brooklands).100 pages.

34 Triumph Vitesse 62-71 Road Test Book **RV6117**
(RM Clark -Brooklands).100 pages.

35 'Road & Track on Triumph Sports Cars 74-82 **RX1439**
(Brooklands). 88 pages.

36 TR2 & TR3 Gold Portfolio 52-61 **RW3033**
(RM Clark - Brooklands).172 pages.

37 Spitfire Competition Prep Manual **RL1638**
(RW Kastner). 64 pages.

38 GT6 Competition Prep Manual **RG1294**
(RW Kastner). 28 pages.

39 Triumph Sports Cars **RX1507**
(William Krause). 96 pages

40 Spitfire Mk3, IV, 1500 Workshop Manual *(Glovebox size)* **RL1637**
(Practical Classics reprint, 186 pages).

41 Triumph TR's: Collectors Guide **RX1295**
(Graham Robson). 128 pages.

42 Collectors Guide (Spitfire & GT6) **RL1417**
(Graham Robson).

- DIY Guide -Spitfire, Herald, GT6 & Vitesse (Haynes) *not shown* **RL1418**

- Triumph TR7 & TR8 **RB7375**
(James Taylor). Owner & Buyers Guide. 66 Pages.

- Triumph TR: Haynes Great Cars Series **RX1523**
(Bill Piggot)

43 How to Resore TR7 & TR8 **RB7694**
(Roger Williams). 176 pages.
Extremely detailed and informative publication.

LUBRICANTS & FLUIDS

ENGINE OIL

ENGINE OIL CAPACITY (INC FILTER):-
TR7 (8V & 16V) 4.5 LITRES, TR8 5.1 LITRES.

Unipart (20W/50)	
4.55 Litre/1 Gallon	**GGL104**
1 litre	**GGL614**
Duckhams Q (20W/50)	
4.55 Litre/1 Gallon	**HMP190100**
Duckhams Q Storage Oil	
4.55 Litre/1 Gallon	**HMP190104**
Castrol Running In Oil 4.55Litre/1 Gallon	**RX1417**
Castrol Classic XL (20W/50)	
4.55 Litre/1 Gallon	**RX1363**
Unipart (10W/40) Semi-Synthetic 5 Litre	**GGL657**

UNLEADED FUEL ADDITIVES

Bottled additives are available which can be mixed with either 'Premium' or 'Super' unleaded depending upon application. It usually works out cheaper to use bottled additives than leaded or LRP - work it out for yourself!

Castrol Valvemaster 250ml	**RX1407VM**
Castrol Valvemaster Plus 250ml	**RX1407VMP**

Endorsed by the federation of British Historic Vehicle Clubs (FBHVC), having been independently tested and approved, both products offer a high level of protection against valve seat recession under all driving conditions. In addition, castrol valvemaster plus provides an octane boost to premium unleaded petrol which reduces pinking or knocking on high compression or performance applications. This also usually avoids the need to re-tune your engine. Treats 250 litres of petrol.

RADIATOR RELIEF

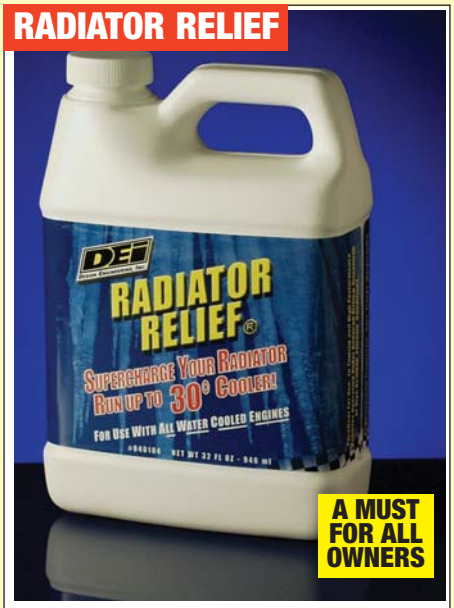

COOLING SYSTEM ADDITIVE

- 30°F lower operating temperature
- 50% quicker warm up time
- Safe with water/antifreeze mixture
- Safe with cast iron, alloy engines and heads
- Increased engine life!
- 100% biodegradable, non corrosive, non toxic
- For use in all water cooled engines

Radiator relief allows your radiator to transfer heat more efficiently, reducing your engines operating temperature (which is obviously controlled by the thermostat) by up to 30°F. You therefore have 'a little bit in hand' for those hot days stuck in traffic. This proven coolant additive will also cut engine warm-up time in half which will reduce engine wear which is most extreme when the engine is cold. Fully compatible with water and anti-freeze and is safe with cast iron and all alloys.

RADIATOR RELIEF (946ml)	**RX1461**

Treats 1 engine.

GEAR OIL

CAPACITIES:-
GEARBOX
4 SPEED - 1.1 LITRE (EP90)
5 SPEED - 1.5 LITRE (ATF)
AUTO - 6.96 LITRE (ATF)
REAR AXLE
4 SPEED/EARLY AUTO - 1.3 LITRE (EP90)
5 SPEED/LATE AUTO - 1.1 LITRE (EP90)

Unipart (EP90) Gear Oil	
0.5 Litre	**GGL190**
5 Litre	**GUL805**
ATF-Auto Transmission Fluid	
0.5 Litre	**GGL175**
5 Litre	**GGL505**

ANTIFREEZE

Unipart Antifreeze	
1 Litre	**GAC2018**
5 Litre	**GAC2019**

GREASE & LUBE

Lithium Grease *(Multi-Purpose)*	
Unipart 0.5 Litre (Tube)	**GGL111**
Brake Rubber Grease	**514578**
Cam Lube (for assembly)	**RX1358**

BRAKE/CLUTCH FLUIDS

Standard (DOT 3) 1 Litre	**GBF103**
Silicone 0.5 Litre*	**RX1327**
Silicone 1 Litre*	**RX1326**

**Do not mix with standard fluid*

OIL JUGS

Castrol Oil Jugs	
1/2 Pint	**RX1395**
1 Pint	**RX1396**
2 Pint	**RX1397**
All Three Jugs	**RX1398**

TO ORDER: 01522 568000
www.rimmerbros.co.uk

BODY CARE & GENERAL CONSUMABLES

AUTOGLYM CAR CARE PRODUCTS

Autoglym Car Care Pack *includes items marked ⋆*	**RX1510**
Silicone Resin Polish *(325ml)⋆*	**RX1312**
Bodywork Shampoo/Conditioner *(500ml)⋆*	**RX1313**
Car Interior Shampoo *(500ml)⋆*	**RX1314**
Glass Polish *(325ml)⋆*	**RX1315**
Cutting Polish *(325ml)⋆*	**RX1316**
Extra Gloss Protection *(325ml)⋆*	**RX1317**
Bumper Care *(325ml)⋆*	**RX1318**
Vinyl & Rubber Care *(325ml)⋆*	**RX1319**
Leather Care Cream *(325ml)⋆*	**RX1320**
Superglym Chrome Polish *(55ml)⋆*	**RX1321**
Clean Wheels *(500ml)⋆*	**RX1322**
Perfect Polishing Cloth *(21sq ft)⋆*	**RX1323**
Aqua Dry *(Synthetic Chamois)⋆*	**RX1324**
Clean Machine *(1 Litre)⋆*	**RX1325**
Hood Care & Maintenance Kit	**RX1433**
Alloy Wheel Seal (Silicone spray)	**RX1443**
Instant Tyre Dressing	**RX1368**
Intensive Tar Remover	**RX1367**
OTHER CAR CARE PRODUCTS	
Sponge	**RX1415**
Wash Leather	**RX1416**

WHEEL WAX

Prevents the build up of brake dust and stops corrosion. Protects against road salt, tar and grime. Gives an incredible shine.

Wheel Wax (225g)	**RX1262**

FINNEGANS 'ANTI-CORROSION' WAXOYL PRODUCTS

Waxoyl starter kit *Inc. RX1028, RX1030, RX1031*	**RX1032**
Waxoyl;	
5 Litre can	**RX1027**
2.5 Litre can	**RX1029**
2.5 Litre cartridge	**RX1028**
Trigger spray gun	**RX1033**
High pressure spray gun *Use with 2.5 litre cartridge*	**RX1030**
Extension probe *Use with high pressure spray gun*	**RX1031**
Aerosol *(400ml)*	**RX1026**
Aerosol *(200ml)*	**RX1025**
Underbody seal;	
1 litre	**RX1024**
500ml	**RX1023**

GENERAL CONSUMABLES

WD40 *(Large - 400ml)*	**GAC111**
Easystart *(Bradex)*	**RX1511**
Radweld *(Holts, 250ml)*	**RX1508**
Silicone Sealant *(80ml tube)*	**GHF6093**
Hylomar (Gasket Sealant)*(100g)*	**GGC102**
Loctite *(Tube)*	**GAC100**
Exhaust jointing compound	**GCH112**
Copaslip *(Tube) (95g)*	**RX1345**
Brake cleaner *(Aerosol)*	**GBF901**
Brake Rubber Grease	**514578**
Latex Rubber Gloves *(Pack of 100)*	**RX1406**
Adhesive (Carpet/trim);	
Tin *(1 Litre)*	**RX1353**
Aerosol *(370g)*	**RX1353A**

TR7 AEROSOL PAINTS & TOUCH-IN TINS/CRAYONS

Aerosols, Touch-in Tins & Touch-in Crayons

Body Colour	BL Colour Code	Aerosol	Touch-in Tin (Brush in lid)	Touch-in Crayon (Brush in cap)
Primer (White)		**RX4048A**	N/a	N/a
Primer (Red Oxide)		**RX4049A**	N/a	N/a
Primer (Grey)		**RX4047A**	N/a	N/a
Aran Beige	*NCC*	**RX4013A**	N/a	N/a
Argent Silver	*MCB*	N/a	N/a	N/a
Astral Blue (Metallic)	*JAF*	**RX4003A**	N/a	N/a
Black	*PMA*	**RX4038A**	N/a	**RX4038C**
Black	*PAG*	N/a	N/a	N/a
Bordeaux Red	*CCK*	N/a	N/a	N/a
British Racing Green (1975)	*HAA*	**RX4030A**	**RX4030B**	N/a
Brooklands Green	*HAE*	**RX4031A**	**RX4031B**	**RX4031C**
Carmine	*CAA*	**RX4020A**	**RX4020B**	N/a
Cashmere	*GMD*	**RX4042A**	N/a	**RX4042C**
Cavalry Blue	*JCJ*	N/a	N/a	N/a
Carmelian	*CDE*	N/a	N/a	N/a
Champagne	*LMK*	**RX4043A**	N/a	**RX4043C**
Delft	*JAB*	**RX4001A**	**RX4001B**	N/a
Ermine	*NME*	**RX4014A**	N/a	N/a
Flamenco	*CAD*	**RX4021A**	**RX4021B**	N/a
French Blue	*JAA*	**RX4000A**	**RX4000B**	N/a
Inca Yellow	*FAB*	**RX4016A**	**RX4016B**	**RX4016C**
Java	*HAB*	**RX4029A**	**RX4029B**	N/a
Leyland White	*NAF*	**RX4010A**	N/a	**RX4010C**
Maple	*AAC*	**RX4044A**	**RX4044B**	N/a
Midas	*GCC*	**RX4040A**	N/a	N/a
Mimosa	*FAA*	**RX4015A**	**RX4015B**	N/a
Monza	*CMV*	**RX4026A**	N/a	**RX4026C**
Moonraker	*JNF*	**RX4008A**	N/a	**RX4008C**
Oporto	*CMP*	**RX4027A**	N/a	**RX4027C**
Pageant Blue	*JAG*	**RX4004A**	N/a	**RX4004C**
Pendelican	*NCE*	**RX4011A**	N/a	**RX4011C**
Persian Aqua	*JMW*	**RX4005A**	**RX4005B**	**RX4005C**
Pharoh Gold	*GCF*	N/a	N/a	N/a
Pimento	*CAB*	**RX4019A**	**RX4019B**	N/a
Platinum	*MCA*	**RX4035A**	N/a	**RX4035C**
Porcelain	*NCG*	N/a	**RX4012B**	N/a
Poseidon	*HAF*	**RX4033A**	N/a	N/a
Richelieu	*CCE*	N/a	N/a	N/a
Russet Brown	*AAE*	**RX4028A**	**RX4028B**	**RX4028C**
Silverleaf	*MME*	**RX4037A**	N/a	**RX4037C**
Tahiti Blue	*JAE*	**RX4002A**	**RX4002B**	**RX4002C**
Tara Green (Metallic)	*HAD*	**RX4032A**	N/a	**RX4032C**
Topaz	*EAA*	**RX4073A**	**RX4073B**	**RX4073C**
Triton	*HAG*	N/a	N/a	N/a
Turmeric	*FCB*	N/a	N/a	**RX4017C**
Vermillion	*CAE*	**RX4022A**	N/a	**RX4022C**
White	*NAB*	**RX4009A**	**RX4009B**	N/a
Zircon	*JMJ*	**RX4007A**	N/a	**RX4007C**

GENERAL USE AEROSOLS

Black - Gloss *(400ml)*	**RX4070A**
Black - Matt *(500ml)*	**RX1266**
Black - Satin *(500ml)*	**RX1538**
Silver (Suitable for wheels) *(16ozs)*	**RX1265**
Lacquer - Clear (Suitable for wheels) *(400ml)*	**RX1261**
Primer - White *(150ml)*	**RX4048A**
Primer - Red Oxide *(150ml)*	**RX4049A**
Primer - Grey *(150ml)*	**RX4047A**
Engine Black *(High Heat)*	
Aerosol *(400ml)*	
Black	**RX1432A**
Aluminium	**RX1432AL**
Brush-on	**RX1432B**
Chassis Paint (Black) *(For general touch-up)*	
Brush on *(125ml)*	**RX4070B**

VEHICLE NUMBER PLATES

ONLY AVAILABLE TO PERSONAL CALLERS.
New legislation from 1/1/03 states that number plates can only be sold directly to the owner of the vehicle together with proof of ownership and personal identification.

*We will need sight of the following three **original** documents:-*

- Vehicle registration document (V5)
- Driving Licence or utility bill.
- Passport or credit card (with photo ID), or travel/works pass (with photo ID).

Number plates are made to special order.

Please note that it is also now mandatory in the UK for all new number plates to bear the originating suppliers name, postcode and telephone number (i.e. Rimmer Bros).

Vehicle Number Plate - Front	
Standard	**NPF**
Standard with 'GB' logo	**NPFGB**
Deluxe - 3D effect	**NPF3D**
Deluxe - 3D effect with 'GB' logo	**NPF3DGB**
Vehicle Number Plate - Rear	
Standard	**NPR**
Standard with 'GB' logo	**NPRGB**
Deluxe - 3D effect	**NPR3D**
Deluxe - 3D effect with 'GB' logo	**NPR3DGB**
Vehicle Number Plate (Pair) - Black	
Black background, Silver letters, Legal on Vehicles Reg. to 1/1/73.	
Pressed aluminium (PR)	**RX1365**
Acrylic - standard letters (PR)	**RX1365B**
Acrylic - engraved letters (PR)	**RX1365A**
Fitting Kit - number plates	**NPK**
Universal kit including 4 self tap screws, 2 white cups, 2 yellow cups & 8 double sided adhesive pads.	

TO ORDER: 01522 568000
www.rimmerbros.co.uk

GENERAL FASTENERS

BOLTS *(Imperial)*

Bolts have a NON Threaded Shoulder.

The threaded length can be calculated by multiplying the diameter by 2 and adding 1/4".

Thread Diameter	Bolt Length	Thread Type	Thread Pitch	PART NUMBER	Spanner Size
1/4"	1.5"	UNF	—	GHF102	7/16" AF
1/4"	2"	UNF	—	GHF118	7/16" AF
5/16"	1.5"	UNF	—	GHF104	1/2" AF
5/16"	2"	UNF	—	GHF121	1/2" AF
3/8"	1.5"	UNF	—	GHF106	9/16" AF
3/8"	3"	UNF	—	GHF126	9/16" AF
1/2"	2"	UNF	—	BH608161	3/4" AF
1/2"	2.5"	UNF	—	BH608201	3/4" AF
1/2"	3"	UNF	—	BH608241	3/4" AF
5/8"	3"	UNF	—	GHF11315	15/16" AF
5/8"	4"	UNF	—	BH610321	15/16" AF

BOLTS *(Metric)*

Bolts have a NON Threaded Shoulder.

The threaded length can be calculated by multiplying the diameter by 2 and adding 6mm.

Thread Diameter	Bolt Length	Thread Type	Thread Pitch	PART NUMBER	Spanner Size
M 6	40mm	Metric Fine	1.0	GHF132	10mm
M 8	40mm	Metric Fine	1.25	GHF134	13mm
M 10	40mm	Metric Fine	1.5	GHF136	17mm
M 12	50mm	Metric Fine	1.75	BH112101	19mm
M 12	60mm	Metric Fine	1.75	BH112121	19mm
M 12	80mm	Metric Fine	1.75	BH112161	19mm
M 16	60mm	Metric Fine	2.0	BH116121	21mm
M 16	80mm	Metric Fine	2.0	BH116161A	21mm

SET SCREWS *(Imperial)*

Set screws are Fully Threaded.

Thread Diameter	Bolt Length	Thread Type	Thread Pitch	PART NUMBER	Spanner Size
1/4"	3/4"	UNF	—	GHF117	7/16" AF
1/4"	1"	UNF	—	GHF101	7/16" AF
5/16"	3/4"	UNF	—	GHF120	1/2" AF
5/16"	1"	UNF	—	GHF103	1/2" AF
3/8"	1"	UNF	—	GHF105	9/16" AF
7/16"	1.5"	UNF	—	GHF107	5/8" AF
1/2"	1.5"	UNF	—	GHF109	3/4" AF
1/4"	1"	UNC	—	GHF161	7/16" AF
1/4"	1.5"	UNC	—	SH504121	7/16" AF
5/16"	1"	UNC	—	GHF163	1/2" AF
5/16"	1.5"	UNC	—	GHF164	1/2" AF
3/8"	1"	UNC	—	GHF165	9/16" AF
3/8"	1.5"	UNC	—	GHF166	9/16" AF

SET SCREWS *(Metric)*

Set screws are Fully Threaded.

Thread Diameter	Bolt Length	Thread Type	Thread Pitch	PART NUMBER	Spanner Size
M 6	25 mm	Metric Fine	1.0	GHF131	10mm
M 8	25 mm	Metric Fine	1.25	GHF133	13 mm
M 10	25 mm	Metric Fine	1.5	GHF135	17mm

STEEL NUTS *(Plain NON Locking - Imperial)*

Thread Diameter	Thread Type	Thread Pitch	PART NUMBER	Spanner Size
3/16"	UNF	—	HN2005	3/8" AF
1/4"	UNF	—	GHF200	7/16" AF
5/16"	UNF	—	GHF201	1/2" AF
3/8"	UNF	—	GHF202	9/16" AF
7/16"	UNF	—	GHF203	5/8" AF
1/2"	UNF	—	GHF204	3/4" AF
1/4"	UNC	—	GHF207	7/16" AF
5/16"	UNC	—	GHF208	1/2" AF
3/8"	UNC	—	GHF209	9/16" AF

STEEL NUTS *(Plain NON Locking - Metric)*

Thread Diameter	Thread Type	Thread Pitch	PART NUMBER	Spanner Size
M 4	Metric Fine	0.7	NH104041	7mm
M 6	Metric Fine	1.0	GHF212	10mm
M 8	Metric Fine	1.25	GHF213	13mm
M 10	Metric Fine	1.5	GHF214	17mm
M 12	Metric Fine	1.75	GHF215	19mm

STEEL NUTS *(Nylon Insert Self Locking - Imperial)*

Thread Diameter	Thread Type	Thread Pitch	PART NUMBER	Spanner Size
3/16"	UNF	—	GHF220	5/16" AF
1/4"	UNF	—	GHF221	7/16" AF
5/16"	UNF	—	GHF222	1/2" AF
3/8"	UNF	—	GHF223	9/16" AF
7/16"	UNF	—	GHF224	5/8" AF
1/2"	UNF	—	GHF225	3/4" AF
5/8"	UNF	—	138563	15/16" AF

STEEL NUTS *(Nylon Insert Self Locking - Metric)*

Thread Diameter	Thread Type	Thread Pitch	PART NUMBER	Spanner Size
M 6	Metric Fine	1.0	NY106041	10mm
M 8	Metric Fine	1.25	GHF232	13mm
M 10	Metric Fine	1.5	GHF233	17 mm
M 12	Metric Fine	1.75	NY112041	19mm

BRASS NUTS *(Standard & Deep Section - Imperial)*

Thread Diameter	Thread Type	Thread Pitch	PART NUMBER	Spanner Size
5/16" Std	UNF	—	515369	1/2" AF
3/8" Std	UNF	—	GHF262	9/16" AF
3/8" Deep	UNF	—	AEC350	9/16" AF

WASHERS *(Imperial)*

Internal Diameter	*Plain* Standard Diameter PART NUMBER	*Repair* Large Diameter PART NUMBER	*Spring* Standard Diameter PART NUMBER	*Shakeproof* Standard Diameter PART NUMBER
3/16"	WP20	—	—	—
1/4"	GHF300	GHF314	GHF331	GHF321
5/16"	GHF301	GHF315	GHF332	GHF322
3/8"	GHF302	GHF316	GHF333	GHF323
7/16"	WC600071	—	GHF334	GHF324
1/2"	WA112081	—	GHF335	GHF325
5/8 "	PWZ110	—	LWZ310	LWZ410

WASHERS *(Metric)*

Internal Diameter	**Plain* Standard Diameter PART NUMBER	**Repair* Large Diameter PART NUMBER	*Spring* Standard Diameter PART NUMBER	*Shakeproof* Standard Diameter PART NUMBER
M 6	GHF300	GHF314	WL106001	GHF371
M 8	GHF301	GHF315	GHF382	WF108001
M 10	GHF302	GHF316	GHF383	WF110001
M 12	GHF304	—	WL112001	WF112001
M 16	PWZ110	—	WL116001	WF116001

**Please Note: Some plain and repair washers are suitable for imperial and metric applications eg: GHF300 = 1/4" ID or 6mm ID.*

SELF TAPPING SCREWS

Pan Head - Pozi Drive

Screw Size No	Screw Length	PART NUMBER
6	1/2"	GHF421
6	3/4"	GHF422
8	1/2"	YZ3404
8	3/4"	GHF424
10	1/2"	GHF425
10	3/4"	YZ5505
12	1/2"	GHF427
12	3/4"	GHF428
12	1"	GHF429
14	3/4"	GHF430
14	1"	GHF431

SPLIT PINS *(Imperial)*

Pin Thickness	Pin Length	PART NUMBER
1/16"	1.5"	GHF500
5/64"	1.5"	GHF501
3/32"	1.5"	PC34
7/64"	1.5"	GHF503
1/8"	2.25"	PC15
9/64"	2.25"	GHF505
5/32"	2.25"	GHF506
11/64"	2.25"	GHF512
3/16"	3"	GHF513
7/32"	3"	PS614240
1/4"	3"	PS616240

SELF TAPPING SCREWS

Countersunk - Pozi Drive

Screw Size No	Screw Length	PART NUMBER
6	1/2"	GHF400
6	3/4"	GHF401
8	1/2"	GHF402
8	3/4"	GHF403
10	1/2"	GHF404
10	3/4"	GHF405
12	1/2"	AC612041A
12	1"	AC612081
14	3/4"	AC614061
14	1"	AC614081

SPLIT PINS *(Metric)*

Pin Thickness	Pin Length	PART NUMBER
2.0mm	40mm	PS104400
2.5mm	40mm	GHF509
3.2mm	56mm	GHF510
4.0mm	56mm	GHF511

'P' CLIPS

Imperial Sized

Part Number	Cable Diameter	Fixing Hole size
PCR207	1/8"	7/32"
PCR307	3/16"	7/32"
PCR309	3/16"	9/32"
PCR311	3/16"	11/32"
PCR407	1/4"	7/32"
PCR409	1/4"	9/32"
PCR411	1/4"	11/32"
PCR507	5/16"	7/32"
PCR509	5/16"	9/32"
PCR511	5/16"	11/32"
PCR607	3/8"	7/32"
PCR609	3/8"	9/32"
PCR611	3/8"	11/32"
PCR707	7/16"	7/32"
PCR709	7/16"	9/32"
PCR711	7/16"	11/32"
PCR807	1/2"	7/32"
PCR809	1/2"	9/32"
PCR811	1/2"	11/32"
PCR813	1/2"	13/32"
PCR1007	5/8"	7/32"
PCR1009	5/8"	9/32"
PCR1011	5/8"	11/32"
PCR1207	3/4"	7/32"
PCR1209	3/4"	9/32"
PCR1211	3/4"	11/32"
PCR1407	7/8"	7/32"
PCR1409	7/8"	9/32"
PCR1411	7/8"	11/32"
PCR1607	1"	7/32"

Metric Sized

CP105081	8mm	5mm
CP108101	10mm	8mm
CP108121	12mm	8mm
CP106161	16mm	6mm
CP108165	16mm	8mm

HOSE CLIPS *Use as required.*

3/8"	to	1/2"	GHC304
7/16"	to	5/8"	GHC405
1/2"	to	3/4"	GHC406
5/8"	to	7/8"	GHC507
3/4"	to	1"	GHC608
7/8"	to	1.1/8"	GHC709
1"	to	1.3/8"	GHC811
1.1/8"	to	1.5/8"	GHC913
1.3/8"	to	2"	GHC1015
1.1/2"	to	2.1/8"	GHC1217
2"	to	2.3/4"	GHC1622

GREASE NIPPLES

Part Number	Thread Size	Angle
UHN400	1/8" BSP	straight, short
UHN445	1/8" BSP	45º angle
LN30041	1/8" BSP	90º angle
144825	1/8" BSP	straight, long
56935	1/4" BSP	straight
125361	1/4" BSP	45º angle
56934	1/4" BSP	90º angle

POP RIVETS

Part Number	Size
Open End Type	
RA607096	2.9mm x 5mm
RA608126	1/8" x 3/16"
RA608176	1/8" x 1/4"
RA608236	1/8" x 5/16"
RA608253	1/8" x 3/8"
Closed End Type	
RU608123	1/8" x 3/8"
RU608313	1/8" x 1/2"
RU612123	3/16" x 5/16"

CABLE TIES

Part Number	Diameter
GHF1265	3 1/2"
GHF1266	5 1/4"
RTC222A	6"
GHF1267	8 3/4"
GHF1268	11"

PIPES AND FITTINGS

Part Number	Material	Size
Brake and Fuel Pipe		
Supplied in 25 footrolls.		
MPKF125	CUPRO-NICKEL	3/16" Dia.
MPKF225	CUPRO-NICKEL	1/4" Dia.
MPKF325	CUPRO-NICKEL	5/16" Dia.
EF125	STEEL	3/16" Dia.
EF225	STEEL	1/4" Dia.
EF325	STEEL	5/16" Dia.

Part Number	Thread Size	Pipe Bore
Pipe Nuts - Male, Steel.		
TM606031	3/8" UNF	3/16"
TM110051	10mm x 1mm	3/16"
LK21994	3/8" BSF	3/16"
BCA4370	7/16" UNF	3/16"
BHA4706	7/16" UNF	1/4"
AUSU40A	1/2" UNF	5/16"
Pipe Nuts - Male, Brass.		
AEHU1	3/8" UNF	3/16"
AEHU2	10mm x 1mm	3/16"
AEHU3	3/8" BSF	3/16"
AEHU7	7/16" UNF	1/4"
Pipe Nuts - Female, Steel.		
TN606031	3/8" UNF	3/16"
SU2A	10mm x 1mm	3/16"
SU4A	7/16" UNF	1/4"
HU41A	1/2" UNF	5/16"
Pipe Nuts - Female, Brass.		
AEHU1A	3/8" UNF	3/16"
AEHU2A	10mm x 1mm	3/16"
AEHU4A	7/16" UNF	1/4"

Part Number	Thread Size
Bleed Screws	
556508A	3/8" UNF
608400A	10mm metric
27H7166	3/8" BSF

Part Number	Capacity
Pipe Clips	
GHF1191	SINGLE, 3/16"
GHF1192	SINGLE, 1/4"
624155	DOUBLE, 3/16"

DESCRIPTION	PAGE NO
A	
'A' Post Assembly	86
'A' Post Trim	104
'AA' Pack	*Accessories*
Accelerator Cable;	
TR7/TR7 Sprint	27
TR8	159
Accelerator Pedal	27
ACCESSORIES	183
Aerial	75
Air Cleaner;	
TR7	28
TR7 Sprint	180
TR8	156, 159, 160
Air Conditioning unit	23
Air Compressor Belt *(TR8)*	147
Air Intake Scoop	84
Alternator;	
TR7/TR7 Sprint	67
TR8	172
'Aley' Roll Bar	122
Anti-Freeze	*Accessories*
Anti-Dive Kit (Front Suspension)	53
Anti-Roll Bar	50, 52, 53
Armrest (Centre console)	112
Armrest (Door)	103
Ashtray (Door)	103
Automatic Gearbox	42
Axle	46, 48, 166
B	
'B' Post Panel;	
Convertible	91
Coupe	92
'B' Post Trim (Coupe only)	117
Badges (Body);	
See also; Transfers.	
TR7	100
TR7 Sprint	182
TR8	174
Badges (Road wheels)	55
Badges (Steering wheels)	64
Ball Joint (Front susp')	51
Ballast Resistor *(TR8)*	172
Battery;	
TR7/TR7 Sprint	77
TR8	173
Bearings: *See;* *Crankshaft (Main), Con Rod (Big ends), Hub Bearings & Clutch (Release bearing).*	
Belt (Drive/Fan): *See;* *Fan Belt, Air Compressor (TR8), & Power Steering (TR8).*	
Blanking Plugs (Body)	95
Big End Bearings: *See; Con Rod.*	
Body Mouldings/Finishers	96
BODY REPAIR PANELS	81
Bodyshell (Convertible & Coupe)	83
BODY STYLING	187
Bolts - General	205
***Note**: For specific bolts please refer to relevant catalogue sections.*	
Bonnet Assembly/Fittings	84
Bottle: *See;* *Expansion Bottle, Header Tank, & Windscreen Washer System.*	
Boot Floor Panel	93
Boot Lid/Fittings	94
Boot Rack	190
Boot Trim/Fittings	118
Brake Calipers;	
TR7/TR7 Sprint	58
TR8 Original	170
Brake Cylinders-Wheel;	
TR7/TR7 Sprint	60
TR8 Original	170
Brake Discs;	
TR7/TR7 Sprint	58
TR8 Original	170
Brake Drum	60
Brake Fluid	*Accessories*
Brake Hoses	62
Brake Kits-Uprated;	
TR7/TR7 Sprint	59
TR8	170
Brake Master Cylinder	61
Brake Pads;	
TR7/TR7 Sprint	58
TR7-V8	170
TR8 Original	170
Brake Pedal	61
Brake Pipes	62
Brake Pressure Valve	62
Brake Servo;	
TR7/TR7 Sprint	61
TR7-V8	170
TR8 Original	170
Brake Shoes	60
Breakdown/Touring Kits	186
Kits are for standard TR7's Only.	
Breather-Engine;	
TR7/TR7 Sprint	28
TR8	159
Bulbs - see Electrical	
Bulkhead Trim Panel (Cockpit area);	
Convertible	116
Coupe	117
Bumper-Front	98
Bumper-Rear	99
Bush Kits-Suspension;	
TR7/TR7 Sprint	54
TR8	169
C	
Cables: *See;* *Accelerator, Bonnet, Choke, Clock, Handbrake, Kickdown & Speedometer.*	
Caliper: *See; Brakes.*	
Camshaft;	
TR7	16
TR7 Sprint	179
TR8	139
Camshaft Sprocket;	
TR7	14
TR7 Sprint	179
TR8	140
Camshaft Cover:	
See also; Rocker Cover (TR8).	
TR7	16
TR7 Sprint	179
Car Covers	197
Cap: *See; Fuel, Oil, and, Pressure (Cooling).*	
Carburettors;	
TR7	25
TR7 Sprint	179
TR8	154
Carpets	114
Centre Console (Interior)	110
Chain: *See; Timing.*	
Chassis Plate	194
Choke Cable;	
TR7/TR7 Sprint	27
TR8	159
Cigar Lighter	74
Clock (Time)	76
Clutch Cover;	
TR7/TR7 Sprint	17
TR8	150
Clutch Fluid	202
Clutch Master Cylinder	17
Clutch Plate;	
TR7/TR7 Sprint	17
TR8	150
Clutch Pedal	17
Clutch Release Bearing;	
TR7/TR7 Sprint	17
TR8	150
Clutch Slave Cylinder	17
Clutch Operating Lever;	
TR7/TR7 Sprint-	
4 Speed Gearbox	33
5 Speed Gearbox	37
TR8-	
5 Speed Gearbox	165
Coil: *See; Ignition.*	
Coil Springs-Front;	
TR7/TR7 Sprint	51
TR8	167
Coil Springs-Rear;	
TR7/TR7 Sprint	52
TR8	167
Cooling Fan-Standard;	
TR7/TR7 Sprint	19
TR8	151
Condenser;	
TR7	68
TR7 Sprint	179
TR8	172
Con Rod;	
TR7/TR7 Sprint	13
TR8	148
Contact Breaker Points;	
TR7	68
TR7 Sprint	179
TR8	172
Crankshaft Bearings (Main);	
TR7	12
TR8	145
Crankshaft Oil Seal (Front);	
TR7	14
TR8	141
Crankshaft Oil Seal (Rear);	
TR7	11
TR8	144
Crankshaft Pulley;	
TR7	14
TR7 Sprint	179
TR8	146
Crankshaft Sprocket;	
TR7	14
TR7 Sprint	179
TR8	140
Crownwheel & Pinion;	
TR7/TR7 Sprint-	
4 Sp/Early Auto	46
5 Sp/Late Auto	49
TR8-	
5 Sp/Auto	166
Cruise Lights (Front/Rear)	75
Cylinder Head;	
TR7	15
TR7 Sprint	179
TR8	136
Cylinder Head Gasket;	
TR7	15
TR7 Sprint	179
TR8	137
D	
Differential;	
TR7/TR7 Sprint-	
4 Sp/Early Auto	46
5 Sp/Late Auto	49
TR8-	
5 Sp/Auto	166
Dipstick-Auto Gearbox	42
Dipstick-Engine;	
TR7	12
TR8	145
Distributor;	
TR7	68
TR7 Sprint	179
TR8	172

DESCRIPTION	PAGE NO
Disc-Brake: *See; Brakes.*	
Drive Plate (Automatic);	
TR7	12
TR8	147
Doors	87
Door Locks/Handles *Convertible & Coupe.*	90
Door Mirror	100
Door Seals (Aperture) *See also; Weatherstrips.*	104
Door Trim Panels	103

E

Electronic Ignition	191
ENGINE;	
TR7	9
TR7 Sprint	179
TR8	133
ENGINE & GEARBOX MOUNTINGS;	
TR7/TR7 Sprint	18
TR8	150
Exhaust;	
TR7	31
TR7 Sprint	181
TR8	161
Exhaust Valve: *See; Cylinder Heads.*	
Expansion Bottle (Cooling)	22
EXTERIOR TRIM *See also; Transfers.*	96

F

Facia-Dash	109
Fan: *See; Cooling.*	
Fan Belt;	
TR7/TR7 Sprint	19
TR8	151
Filter: *See; Air Filter & Oil Filter.*	
Flasher Unit: *See; Relays.*	
Flywheel;	
TR7	12
TR8	147
Fog Lights	73
Front Panel	83
Front Wing	83
Front Side/Flasher Lamp	71
Fuel Cap	30
Fuel Filter ***(TR8)***	160
Fuel Gauge	76
Fuel Pump;	
TR7/TR7 Sprint	29
TR8	160
Fuel Sender Unit;	
TR7	30
TR8	160
Fuel Tank	30
Fuses	75

G

Gaiter: *See; Handbrake/Gear Lever.*	
Gearbox-Manual;	
TR7/TR7 Sprint-	
4 Speed	33
5 Speed	37
TR8-	
5 Speed	165
Gearbox-Automatic	42
Gear Lever Gaiter (Fabric & Rubber)	111
Gearbox Mounting;	
TR7/TR7 Sprint	18
TR8	150
Gear Oil	*Accessories*
Glovebox	110
Grommets	95

H

Handbrake	63
Handbrake Gaiter (Fabric)	112
Handbooks	*Accessories*
Hardtop	196
Harness: *See; Wiring Harness.*	
Hazard Unit: *See; Relays.*	
Header Tank (Cooling);	
TR7/TR7 Sprint	22
TR8	153
Head Gaskets: *See; Cyl Head.*	
Headlamps	70
Headlamp Dip/Flash Stalk: *See; Switches.*	
Headlining (Coupe only)	123
Headrests/Covers	108
Heater Controls	74
Heater Hoses;	
TR7	21
TR8	152
Heater Unit	23
Hinges;	
Doors	86
Bonnet	84
Boot	94
HOOD & FRAME	119
Hood Covers	120
Hood Stowage Covers	121
Horns	75
Hoses-Brakes: *See; Brakes.*	
Hoses-Cooling;	
TR7	21
TR8	152
Hub Bearings & Seals;	
Front Hub	51
Rear Hub	47, 49

I

Ignition Switch: *See; Switches.*	
Ignition Lock	65
Indicator Stalk: *See; Switches.*	
Inlet Manifold;	
TR7	24
TR7 Sprint	180
TR8	154
Inlet Valve: *See; Cyl Heads.*	
Instruments	76
Interior Lighting	73
Interior Mirror	100
Interior Trim Kits	101

J

Jack (Car lift)	*Accessories*
Jackshaft	12
Jackshaft Sprocket;	
TR7	14
TR7 Sprint	179
Jet (Washer): *See; Windscreen.*	

K

Kenlowe (Cooling fan);	
TR7/TR7 Sprint	19
TR8	151
Key Fob (All)	195
Kickdown Cable	42
Kick Plates (Sill)	96
Knee Pads	110
Knuckle/Joint (Steering Column)	65

L

LENHAM HARDTOP	196
Lens	71
Lighting	70
Light Switches	74.
Limited Slip Diff	48
Lock: *See; Bonnet, Boot, Doors & Ignition.*	
Looms: *See; Wiring Harness.*	
Lubricants & Fluids	*Accessories*

M

Main Bearings: *See; Crankshaft.*	
Manifolds: *See; Inlet & Exhaust.*	
Manuals & Books	*Accessories*
Master Cylinder: *See; Brakes and Clutch.*	
Mats	*Accessories*
Mirrors *(External & Internal)*	100
Mouldings-Body: *See; Body Mouldings.*	
Mountings-Engine: *See; Engine Mountings & Gearbox Mountings.*	
Mudflaps (Front/Rear)	*Accessories*

N

Number Plates	*Accessories*
Number Plate Lamp	72
Nuts - General ***Note:*** *For specific nuts, please refer to relevant sections.*	205
Nuts (Wheel): *See; Wheel Nuts.*	

O

Oil Cooler-Engine;	
TR7	16
TR8	149
Oil Cooler *(Auto Gearbox)*	42
Oil Filler Cap;	
TR7	16
TR7 Sprint	279
TR8	139
Oil Filter-Standard;	
TR7	13
TR8	149
Oils	*Accessories*
Oil Pressure Gauge Kit	13
Oil Pressure Switch;	
TR7	13
TR8	149
Oil Pump-Engine;	
TR7	13
TR8	149
Oil Seals: *See; Camshaft, Crankshaft, Gearbox, Rear Axles & Hub.*	
Overflow Bottle: *See; Expansion Bottle, & Header Tank.*	
Overmats (Tailored) *TR7 & TR8.*	*Accessories*

P

Paint	*Accessories*
Paint Codes	*Accessories*
Parcel Shelf: *See; Rear Bulkhead/Shelf Trim.*	
Parts Books (BL)	*Accessories*
Pistons & Rings;	
TR7	13
TR7 Sprint	179
TR8	148
Plug Leads;	
TR7	68
TR7 Sprint	182
TR8	172
Points-Ignition: *See; Contact Breaker Points.*	
Power Steering (TR8 only)	171

DESCRIPTION	PAGE NO
Pressure Cap-Cooling;	
TR7/TR7 Sprint	22
TR8	153
Printed Circuit (Instruments)	76
Propshafts;	
TR7/TR7 Sprint	45
TR8	166
Pulley: *See;* *Crankshaft, and Water Pump.*	
Pump: *See;* *Oil Pump (Engine), Oil Pump Kit (Gearbox) & Water Pump.*	

R

Radio Aerial	75
Radio Speaker	75
Radiator;	
TR7	20
TR8	152
Radiator Cap: *See;* *Pressure Cap.*	
Radiator Hoses;	
TR7	21
TR8	152
Rear Axle	46, 48, 166
Rear Bulkhead/Shelf Trim	116, 117
Rear Lamps & Fittings	72
Rear Wing	91, 92
Relays	75
Repair Panels (Body)	81
Rev Counter;	
TR7	76
TR8	173
Reverse Light Switch: *See;* *Switches.*	
Ring Gear (Flywheel/Drive Plate);	
TR7	12
TR8	147
ROAD WHEELS & ROADSIDE TOOLS/EQUIPMENT	55
Rocker Covers (TR8)	139
Roll Bar - 'Aley'	122
Rotor Arm;	
TR7	68
TR7 Sprint	182
TR8	172
Rubber Seals	7
General Body/Door Seals.	

S

Screws - General	205
***Note**: For specific screws please refer to relevant catalogue sections.*	
Seals (Oil): *See;* *Camshaft, Crankshaft, Gearbox, Rear Axles & Hub.*	
Seals (Rubber)	7
QUICKFINDER - General Body/Door Seals.	
Seat Belts	109
Seat Covers/Trim	106
Service Information (*Capacities & Settings);*	
TR7	8
TR7 Sprint	179
TR8	125
Shock Absorber-Front	51
Shock Absorber-Rear	52
Sills	93
Slave Cylinder-Clutch	17
Solenoid-Starter Motor;	
TR7	66
TR8	172
Spark Plugs;	
TR7	68
TR7 Sprint	182
TR8	172
Speedometer	76
Speedometer Cable;	
TR7/TR7 Sprint	76
TR8	173
Speaker-Radio	75
Split Pins-General	205
***Note**: for specific pins please refer to relevant catalogue sections.*	

DESCRIPTION	PAGE NO
Spoilers	188
Springs-Front (Road);	
See also; *Suspension Packs.*	
TR7	51
TR8	167
Springs-Rear (Road);	
See also; *Suspension Packs.*	
TR7/TR7 Sprint	52
TR8	167
Starter Motor;	
TR7/TR7 Sprint	66
TR8	172
STEERING;	
TR7/TR7 Sprint	64
TR8	171
Steering Column	65
Steering Knuckle/Joint *(Steering Column)*	65
Steering Rack;	
TR7	64
TR8	171
Steering Wheels;	
TR7	64
TR8	171
Strut Insert-Front (Shock absorber)	51
Stub Axle	51
Subframe (Front);	
TR7	50
TR8	167
Sump Pan (Oil Pan);	
TR7	12
TR8	144
SUN-ROOF (Coupe)	123
Sun Visor	112
SUSPENSION - FRONT;	
TR7	50
TR8	167
SUSPENSION - REAR;	
TR7	52
TR8	167
Suspension Bush/Bolt Packages;	
TR7	54
TR8	169
SUSPENSION PACKAGES	
TR7	53
TR8	168
Switches	74
Column, Dash & Miscellaneous.	

T

Tachometer: *See;* *Rev Counter.*	
Tail Lights: *See;* *Rear Lamps.*	
Tappets: *See;* *Camshaft Followers.*	
Temperature Gauge	76
Temperature Transmitter;	
TR7	20
TR8	152
Thermostat;	
TR7	20
TR8	152
Tie Bar (Rear Suspension)	52
Timing Chain;	
TR7	14
TR7 Sprint	179
TR8	140

DESCRIPTION	PAGE NO
Timing Cover;	
TR7	14
TR7 Sprint	179
TR8	141
Tonneau Cover (Convertible)	122
Tools	*Accessories*
Torque Converter	42
Touring Kits (TR7 only)	57
Tow Bar	195
Track Rod Ends;	
TR7	64
TR8 (PAS)	171
Trailing Arm (Rear Suspension)	52
Transfers;	
TR7	100
TR7 Sprint	182
TR8	174
Tread Plates: *See;* *Kick Plates.*	
Trim Codes (Interior)	101
Trim Panels; *See;* *INTERIOR TRIM.*	

U

Underfelt Kit (Carpet)	114
Universal Joint (Propshafts) *TR7/TR7 Sprint*	45
Universal Joint (Steering Knuckle)	65

V

Valves: *See;* *Cylinder Heads.*	
Vacuum: *See;* *Distributor.*	
Viscous Coupling (Cooling fan);	
TR7	19
TR8	151
Vouchers (Rimmer Bros)	*Accessories*

W

Warning Triangle	*Accessories*
Washers - General	205
***Note**: For specific washers please refer to relevant catalogue sections.*	
Water Pump;	
TR7	19
TR8	151
Weatherstrips (Door waist)	87
Wheel Arches-Front Inner	85
Wheel Arches-Rear Inner	91, 92
Wheel Arch Repair Panels	81
Wheel Bearings: *See;* *Hub.*	
Wheel Badge/Centre: *See;* *Badges.*	
Wheels: *See;* *Road Wheels, and, Steering.*	
Wheel Cylinders;	
TR7	60
TR8	170
Wheel Nuts	55
Window Seals: *See;* *Weatherstrips.*	
Window Regulator	88, 89
Windscreen	95
Windscreen Washer System	69
Wing: *See;* *Front Wing & Rear Wing.*	
Wiper Arm/Blade	69
Wiper Delay: *See;* *Relays.*	
Wiper Motor/Rack	69
Wiper/Washer Switch: *See;* *Switches.*	
Wire Wheels	56
Wiring Harness (Main & Auxiliary)	77
Workshop Consumables	*Accessories*
Workshop Manuals	*Accessories*

NOTES

The TR Drivers Club

The TR Drivers Club has been around for almost twenty five years now and was primarily formed to ensure preservation of the last of the TR sports car line - the TR7/8. Its membership predominantly comprises of TR7/8 owners and is widely acclaimed to have the best technical expertise and experience to support the future of this marque.

The TR Drivers Club is run by enthusiasts on a non profit basis ensuring that its members are kept in touch with the TR scene, they produce a quality bi-monthly magazine containing a good balance of technical articles, services and local group social scenes.

Local area activities include regular social gatherings, activities and drive outs for the more active club members, should you wish to get involved of course.

The TR Drivers Club annual national weekend attracts the largest gathering of TR7/8 vehicles and enthusiasts in the UK, it's the place to be if you're into TR7's and TR8's.

For membership details please contact:
Kevin Morton. TR Drivers Club. 12 Puxton Drive, Kidderminster, Worcester DY11 5DR
Club Hotline: **01562 825000.**
E-mail: TRDRIVER@btinternet.com Website: www.trdrivers.com

Founded in 1970 and now with 7500 members worldwide.

Talk to us before you buy your classic TR!

TR Register

Insurance, superb magazine, local and international events, technical help and Recognised Supplier scheme, plus many other benefits.

Check our website for further information
www.tr-register.co.uk

TR Register, 1B Hawksworth, Southmead Industrial Park, Didcot, Oxon OX11 7HR
Tel: 01235-818866. Fax: 01235-818867
www.tr-register.co.uk E-mail: office@tr-register.co.uk

OTHER TRIUMPH CLUBS THAT ALSO HAVE A TR7/TR8 FOLLOWING.

T.S.S.C.
Monthly magazine called "Courier".
Main Street, Lubenham, Leics LE16 9TF.

THE TRIUMPH SPORTING OWNERS CLUB
Bi-monthly magazine called "Triumph on the Road".
16 Windsor Road, Hazel Grove, Stockport, Cheshire SK7 4SW.

CLUB TRIUMPH
Bi-monthly magazine called "Club Torque".
2 Brook Way, Christchurch, Dorset BH23 4HA.

CLUB TRIUMPH (EASTERN)
Bi-monthly magazine called "Plugs & Points".
17 Cranborne Gardens, Upminster, Essex RM14 2YT.

ACKNOWLEDGMENTS

We would like to thank the TR Drivers Club, and to its members whose cars we photographed, also to Stuart Fairwood and Wayne Walsh for providing additional photography.
Special thanks must go to; 'Quadrant Picture Library' of Surrey, the 'National Motor Museum at Bealieu', and to the 'British Motor Heritage Industry Trust; at Gaydon, for permitting us to reproduce rare archive photography of TR7's and TR8's, our sincere thanks to them and members of staff for their help.
Particular mention must go to Washingborough Hall, Washingborough, Lincoln, and to Fulbeck Hall, Grantham, Lincolnshire, for the location photography.
Last, but not least, our thanks to John Randall for his knowledge and assistance.

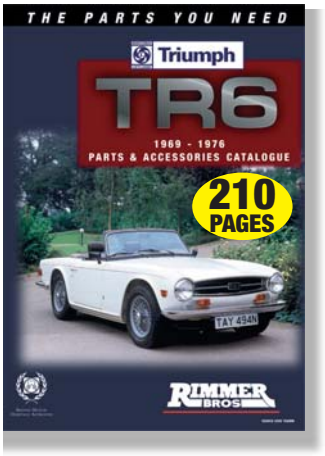

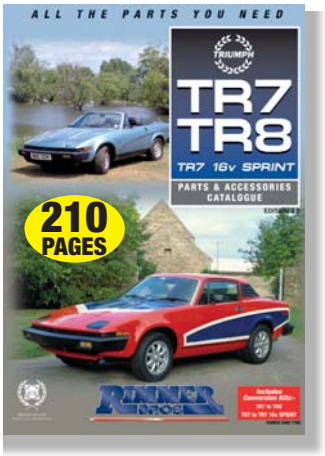

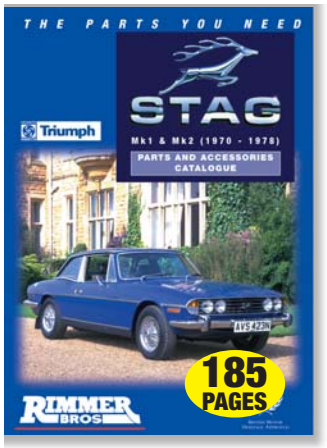

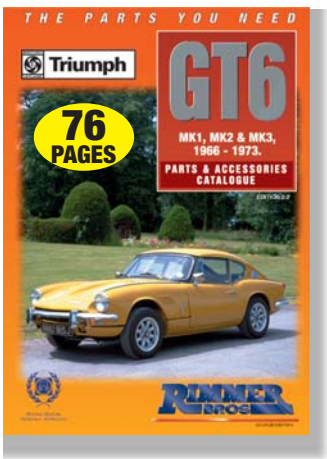

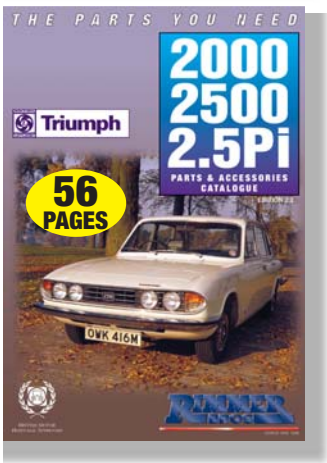

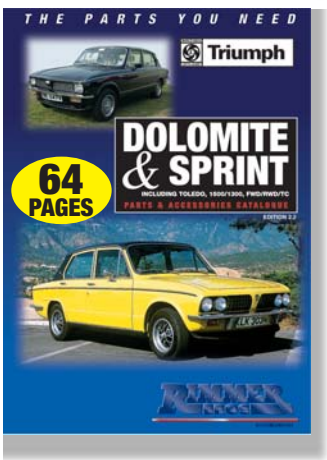

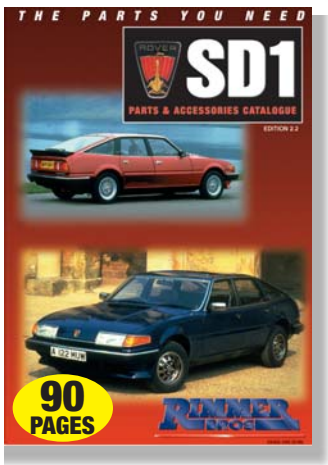

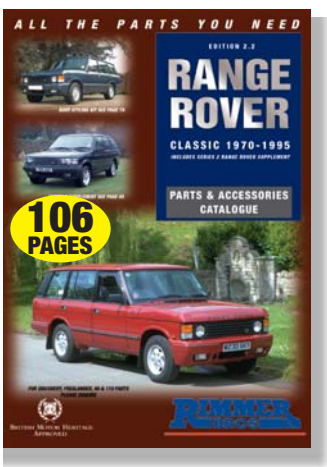

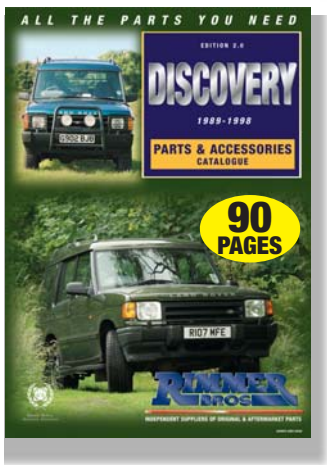

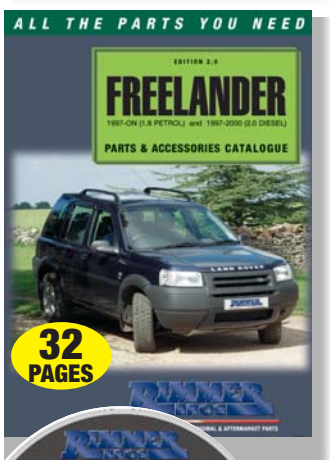

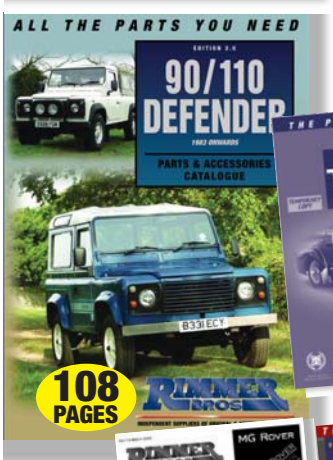

OUR CATALOGUES

ARE YOUR PASSPORT TO THE FINEST MAIL-ORDER PARTS SERVICE

RIMMER BROS CATALOGUES

If you are a Triumph, SD1, MG Rover, Range Rover, Freelander, Defender or Discovery owner - a catalogue will be despatched FREE including post & packing.

Small postage charge made for additional catalogues.

FOR YOUR COPY, PHONE, FAX, WRITE OR E-MAIL.

BROWSE OUR CATALOGUES ON YOUR PC!

SEE PRICE GUIDE FOR DETAILS

FULL SET OF CATALOGUES

(POSTAGE CHARGES)

£10 (UK) £15 (Europe) £35 (Rest of World)

Once registered as a customer for a specific vehicle you will be automatically updated (free of charge) with any new catalogue or price guides as they are published.

HOW TO FIND US

We're 2 miles south of Lincoln,
on the A15 Lincoln to Sleaford road.

BUSINESS HOURS

8.30am - 5.30pm Monday to Friday.
8.30am - 1.30pm Saturday.
(Closed Sunday and Bank Holidays except Good Friday)

TRIUMPH

BRITISH MOTOR HERITAGE APPROVED

DO YOU HAVE ANY OLD UNITS?

WE'RE BUYERS AS WELL AS SELLERS

Alongside our new parts, we also offer parts which have been reconditioned (to the very highest standards). Because of this, we are often in the market for engines, gearboxes and axles which are suitable for reconditioning purposes. Please give us a call.

ALL PARTS ARE GUARANTEED

"It's our objective to ensure the satisfaction of every one of our customers."

Please refer to our Price Guide for warranty information.

RIMMER BROS

Rimmer Bros Ltd. Triumph House, Sleaford Road, Bracebridge Heath, Lincoln LN4 2NA, England.

Tel: (01522) 568000.

Fax: (01522) 567600. E-Mail: sales@rimmerbros.co.uk www.rimmerbros.co.uk